SALTALK FREMONT KITCHEN TENANT IMPROVEMENT

Saltalk

42550 ALBRAE ST., FREMONT, CA 94538

ALAMEDA COUNTY H.C.S.A.
DEPT. OF ENVIRONMENTAL HEALTH
Date 10/17/2022 Approved by T. TRAN
R.E.H.S. No. 7712
Approved plans shall not be changed without authorization
Approval expires on 4/17/2023

CALL HEALTH DEPT. (510) 567-6700
48 HOURS IN ADVANCE TO ARRANGE:
- Rough Plumbing Inspection
- Final Inspection (Before Foods Is Brought In)

ABBREVIATIONS

A.B.	ANCHOR BOLT
A.C.	ASPHALTIC CONCRETE
A/C	AIR CONDITIONING
A.C.T.	ACOUSTICAL CEILING TILE
ACOUS.	ACOUSTICAL
A.F.F.	ABOVE FINISH FLOOR
AL/ALUM	ALUMINUM
APPROX	APPROXIMATE
BD	BOARD
BLDG	BUILDING
BLKG	BLOCKING
B.O.	BY OTHERS
CAB.	CABINET
C.L.	CENTER LINE
CLNG	CEILING
CL	CLEAR
C.M.U.	CONCRETE MASONRY UNIT
COL	COLUMN
CONC	CONCRETE
CONST	CONSTRUCTION
CONT	CONTINUOUS
CPT	CARPET
C.W.	COLD WATER
DTL	DETAIL
DEMO	DEMOLITION
DIA	DIAMETER
DIM	DIMENSION
DWG	DRAWING
DF	DRINKING FOUNTAIN
EA	EACH
ELEV	ELEVATION
ELEC	ELECTRICAL
EQ	EQUAL
EXH	EXHAUST
(E)	EXISTING
EXT	EXTERIOR
EXP	EXPANSION
E.O.	EDGE OF
E.W.	EACH WAY
FIN	FINISH
F.O.F.	FACE OF FINISH
F.O.S.	FACE OF STUDS
FT	FEET
GA	GAUGE
GALV	GALVANIZED
GYP	GYPSUM
I.D.	INSIDE DIAMETER
INCL	INCLUDING
INSUL	INSULATION
INT	INTERIOR
JAN	JANITOR
K.S.	KNEE SPACE
MATL	MATERIAL
MAX	MAXIMUM
MECH	MECHANICAL
MET	METAL
MFR	MANUFACTURER
MISC	MISCELLANEOUS
MIN	MINIMUM

(N)	NEW
N	NORTH
N.I.C.	NOT IN CONTRACT
NO / #	NUMBER
N.T.S.	NOT TO SCALE
O/	OVER
O.C.	ON CENTER
O.D.	OUTSIDE DIAMETER
OPNG	OPENING
P.LAM.	PLASTIC LAMINATE
PNL	PANEL
PR	PAIR
RAD	RADIUS
REC	RECESSED
RECT	RECTANGLE
REF	REFERENCE
REINF	REINFORCED/ING
REQ	REQUIRED
R.O.	ROUGH OPENING
S.C.	SOLID CORE
SCHED	SCHEDULE
S.F.	SQUARE FOOT
SHT	SHEET
SIM	SIMILAR
SPECS	SPECIFICATIONS
SQ	SQUARE
STD	STANDARD
STL	STEEL
ST.STL.	STAINLESS STEEL
STRUCT	STRUCTURAL
S.S.	SANITARY SEWER
SUSP	SUSPENDED
T.O.	TOP OF
TEMP	TEMPERED
T.O.S.	TOP OF SLAB
TYP	TYPICAL
U.N.O.	UNLESS NOTED OTHERWISE
V.I.F.	VERIFY IN FIELD
V.C.T.	VINYL COMPOSITE TILE
W/	WITH
W/O	WITHOUT
WIN	WINDOW
WD	WOOD

SYMBOLS

Symbol	Meaning
A / 1	REFERENCE GRID
+24'-6"	LEVEL LINE
D11	DOOR NUMBER
W10	WINDOW NUMBER
ROOM 101	ROOM NAME / NUMBER
1 (triangle)	REVISION NUMBER
01	KEYNOTE NUMBER
2 / A-2.1	ELEVATION NUMBER / SHEET NUMBER
2 / A-3.1	SECTION NUMBER / SHEET NUMBER
1 / A-5.1	DETAIL NUMBER / SHEET NUMBER

GENERAL NOTES

1. VARIANCES BETWEEN ACTUAL CONDITIONS AND DRAWINGS
THE OWNER OR THE OWNER'S DESIGNATED REPERSENTATIVE, AND THE OWNER'S CONSULTANTS WILL ASSUME NO RESPONSIBILITY FOR VARIANCES BETWEEN ACTUAL EXISTING CONDITIONS AND CONDITIONS DEPICTED AS EXISTING ON THE DRAWINGS. THE CONTRACTOR SHALL INSPECT THE SITE AND THE BUILDINGS, AND SHALL VERIFY TO HIS OWN SATISFACTION THE CONDITIONS SHOWN ON THE DRAWINGS WHICH MATERIALLY AFFECT THE CONTRACTOR'S ABILITY TO EXECUTE THE WORK. HE SHALL IMMEDIATELY INFORM THE OWNER OR THE OWNER'S DESIGNATED REPRESENTATIVE OF ANY DISCREPANCIES BETWEEN EXISTING CONDITIONS AND THESE DRAWINGS.

THE DRAWINGS AND NOTES DEPICTING EXISTING CONDITIONS ARE INTENDED ONLY AS A MEANS OF PROVIDING THE CONTRACTOR A GENERAL SENSE OF EXISTING SITE AND BUILDING CONDITIONS. THE OWNER OR OWNER'S DESIGNATED REPRESENTATIVE, AND THE OWNER'S CONSULTANTS WILL ASSUME NO RESPONSIBILITY FOR VARIANCES BETWEEN CONDITIONS SHOWN ON THE DRAWINGS AS EXISTING AND ACTUAL FIELD CONDITIONS. THE CONTRACTOR SHALL ASSUME THAT THERE MAY BE MINOR DIFFERENCES BETWEEN CONDITIONS SHOWN ON THE DRAWINGS AS EXISTING AND ACTUAL FIELD CONDITIONS. THE OWNER WILL NOT CONSIDER REQUESTS FOR ADDITIONAL MONIES FROM THE CONTRACTOR DUE TO MINOR DISCREPANCIES BETWEEN CONDITIONS SHOWN ON THE DRAWINGS AS EXISTING AND ACTUAL FIELD CONDITIONS. IF MAJOR DIFFERENCES BETWEEN CONDITIONS SHOWN ON THE DRAWINGS AS EXISTING AND ACTUAL FIELD CONDITIONS ARE ENCOUNTERED BY THE CONTRACTOR, THE CONTRACTOR SHALL IMMEDIATELY INFORM THE OWNER OR THE OWNER'S DESIGNATED REPRESENTATIVE AND SHALL STOP WORK IN THE AREA WHERE THE CONTRACTOR HAS ENCOUNTERED MAJOR DIFFERENCES BETWEEN CONDITIOS SHOWN ON THE DRAWINGS AS EXISTING AND ACTUAL FIELD CONDITIONS. THE OWNER OR THE OWNER'S DESIGNATED REPRESENTATIVE WILL PROVIDE INSTRUCTIONS FOR PROCEEDING IN THE AREA WHERE THE CONTRACTOR HAS ENCOUNTERED MAJOR DIFFERENCES BETWEEN CONDITIONS SHOWN ON THE DRAWINGS AS EXISITING AND ACTUAL FIELD CONDITIONS IN A TIMELY MANNER. IF THE CONTRACTOR IS REQUIRED TO STOP WORK IN AN AREA DUE TO THE CONTRACTOR ENCOUNTERING MAJOR DIFFERENCES BETWEEN CONDITIONS, HE SHALL PROCEED WITH ALL OTHER WORK ITEMS AS REQUIRED BY THE CONTRACT DOCUMENTS.

2. INTENT OF THE DRAWINGS
THE NOTES DESCRIBING THE SCOPE OF THE WORK ARE INTENDED AS A GUIDE TO OUTLINE THE NATURE AND EXTENT OF THE WORK. OTHER PARTS OF THE CONTRACT DOCUMENTS, INCLUDING THE DRAWINGS AND SPECIFICATIONS, MAY SHOW AND/OR REFERENCE WORK NOT INCLUDED IN THE NOTES.THE CONRACTOR SHALL VISIT THE SITE AND EXAMINE THE CONDITIONS THERE AND THOROUGHLY ACQUAINT HIMSELF WITH OBSTACLES AND ADVANTAGES FOR PERFORMING THE WORK, AND CAREFULLY REVIEW ALL DRAWINGS AND SECTIONS OF THE SPECIFICAIONS AS THERE ARE REQUIREMENTS SHOWN ON THE DRAWINGS AND CONTAINED IN THE SPECIFICATIONS THAT SIGNIFICANTLY AFFECT THE SCOPE OF THE WORK AS OUTLINED IN THESE NOTES. NO ADDITIONAL CHARGE(S) WILL BE ALLOWED FOR WORK CAUSED BY THE CONTRACTOR'S UNFAMILIARITY WITH THE SITE, AND THE DRAWINGS AND SPECIFICATIONS, OR FAILURE OF THE OWNER OR THE OWNER'S DESIGNATED REPRESENTATIVE OR OWNER'S CONSULTANTS TO ENUMERATE THE COMPLETE SCOPE OF WORK, AS REQUIRED BY THE CONTRACT DOCUMENTS, IN THE ACCOMPANYING NOTES.

3. GENERIC NAMES
THE DRAWINGS IDENTITY MATERIALS BY GENERIC NAME. PROVIDE SUBMITTALS TO ARCHITECT FOR APPROVAL FOR THESE MATERIALS UNLESS SPECIFIED CLEARLY IN THE DRAWINGS.

4. FINISHES
UNLESS OTHERWISE NOTED ON THE DRAWING OR IN THE SPECIFICATIONS THE SELECTION OF COLORS AND TEXTURES FOR FINISH MATERIALS SHALL MATCH EXISTING CONDITIONS.

5. PROJECT COORDINATION
SEE DIVISION I, OF THE SPECIFICATIONS FOR SPECIFIC REQUIREMENTS RELATED TO PROJECT COORDINATION, PATCHING OF EXISTING CONSTRUCTION REQUIREMENTS.

6. CODES AND REGULATIONS
ALL CONSTRUCTION AND THE WORK OF ALL CONTRACTORS, SUB OR GENERAL SHALL FULLY COMPLY WITH THE LOCAL BUILDING CODES AND REGULATIONS.

7. PERMITS

A. THE CONTRACTOR SHALL PAY FOR AND OBTAIN A BUILDING PERMIT FOR THIS WORK. THE FEES PAID BY THE CONTRACTOR FOR THIS PERMIT SHALL BE REIMBURSED TO THE CONTRACTOR BY THE OWNER IN THE AMOUNT PAID.

B. THE CONTRACTOR SHALL OBTAIN AND PAY FOR PERMITS REQUIRED TO PERFORM THE FIRE SPRINKLER WORK BY GOVERNING AUTHORITIES FOR THE COMPLETION OF THE WORK. THE FEES, CHARGES OR OTHER COSTS PAID BY THE CONTRACTOR FOR SAID PERMIT SHALL NOT BE REIMBURSED.

C. THE CONTRACTOR SHALL PROCURE ALL NOTICES AND LICENSES REQUIRED FOR THE COMPLETION OF THE WORK. THE COST OF THESE NOTICES AND LICENCES IS INCIDENTAL TO OTHER ITEMS OF WORK AND NO ADDITIONAL PAYMENT WILL BE MADE FOR COSTS INCURRED BY OBTAINING NOTICES AND LICENCES OR IN CONFORMING TO THE REQUIREMENTS THEREOF.

8. GENERAL CONDITIONS
THE GENERAL CONDITIONS AND ANY SUPPLEMENTAL CONDITIONS WHICH MAY BE ATTACHED OR INCULDED AS PART OF OWNER-CONTRACTOR AGREEMENT ARE A PART OF THESE CONTRACT DOCUMENTS.

9. THE SPECIFICATIONS
NOT USED.

10. BIDDING
ALL CONTRACTORS, SUB OR GENERAL, BIDDING OR CONSTRUCTING ANY PORTION OF THIS PROJECT, SHALL BE HELD RESPONSIBLE TO REVIEW AND INCLUDE IN ANY BID SUBMITTED, ALL OTHER DRAWINGS AND SPECIFICATIONS WHICH FORM A PART OF THESE CONSTRUCTION DOCUMENTS INCLUDING, BUT NOT LIMITED TO, ARCHITECTURAL, GENERAL NOTES, CIVIL, LANDSCAPE, STRUCTURAL, MECHANICAL, PLUMBING, ELECTRICAL, AND EQUIPMENT PLANS AS MAY APPLY TO SAID TRADE BIDDING.

11. VERIFICATION
THE CONTRACTOR SHALL VERIFY ALL SIZES OR PREPARATORY WORK FOR EQUIPMENT OF OTHERS AND SHALL COORDINATE THE WORK ON THIS CONTRACT WITH ALL WORK FURNISHED BY OTHERS.

12. DISCREPANCIES

A. THE CONTRACTOR SHALL VERIFY ALL DIMENSIONS, ELEVATIONS AND ALL EXISTING CONDITIONS AT THE SITE BEFORE COMMENCING WORK AND REPORT ANY DISCREPANCIES TO THE ARCHITECT PRIOR TO THE START OF WORK. IN CASE OF CONFLICT BETWEEN ARCHITECTURAL AND CONSULTANT DRAWINGS, THE ARCHITECT WILL DETERMINE THE CORRECT INTENT OF THE WORK.

B. IF ANY ERRORS OR OMISSIONS APPEAR IN THE CONTRACT DOCUMENTS, THE CONTRACTOR SHALL NOTIFY ARCHITECT IN WRITING OF SUCH ERRORS OR OMISSIONS. IF CONTRACTOR FAILS TO GIVE SUCH NOTICE, HE WILL BE HELD RESPONSIBLE FOR RESULTS OF SUCH ERRORS OR OMISSIONS AND FOR THE COST OF RECTIFYING SAME.

13. DESIGN INTENT
THE CONTRACTOR SHALL NOT DEVIATE FROM CONSTRUCTION DESIGN INTENT AND CONSTRUCTION DETAILS WITHOUT OBTAINING PRIOR APPROVAL FROM THE OWNER AND THE ARCHITECT.

14. DETAILS
DETAILS ARE INTENDED TO SHOW METHOD AND MANNER OF ACCOMPLISHING THE WORK. MINOR MODIFICATIONS MAY BE REQUIRED TO SUIT THE JOB DIMENSIONS OR CONDITIONS AND SHALL BE INCLUDED AS PART OF THE WORK.

15. DIMENSIONS
DIMENSIONS ARE TO THE FACE OF THE STUD AND ARE MEANT FOR GENERAL INFORMATION ONLY. CLEAR DIMENSIONS ARE FROM THE FACE OF FINISH WHEN INDICATED. ACCURACY OF THE DIMENSIONS ARE TYPICALLY WITHIN 6 INCHES PLUS OR MINUS. CONTRACTOR IS RESPONSIBLE TO VERIFY ALL FIELD CONDITIONS.

16. TYPICAL
"TYPICAL" MEANS ALL, EXCEPT AS SPECIFICALLY NOTED. "SIMILAR" MEANS THERE ARE SLIGHT VARIATIONS AMOUNG CONDITIONS WHERE THE DETAILS OCCUR.

17. COORDINATION OF TRADES

A. THE GENERAL CONTRACTOR SHALL BE RESPONSIBLE FOR THE TIMELY ARRIVAL OF ALL SPECIFIED FINISH MATERIALS, EQUIPMENT, LIGHT FIXTURES AND OTHER SUCH MATERIAL(S) TO BE UTILIZED ON THIS PROJECT. THE GENERAL CONTRACTOR SHALL NOTIFY THE ARCHITECT IN WRITING WITHIN 30 DAYS OF THE DATE OF CONTRACT OF THOSE SPECIFIED ITEMS THAT MAY NOT BE READILY AVAILABLE AND OF EQUAL QUALITY AND DESCRIPTION. IF NOTIFICATION IS NOT RECEIVED BY THE ARCHITECT, THE CONTRACTOR SHALL ACCEPT RESPONSIBILITY FOR THE PROPER ORDERING AND FOLLOW-UP ON SPECIFIED ITEMS AND SHALL PURSUE WHATEVER MEANS NECESSARY AT NO ADDITIONAL COST TO THE OWNER, TO INSURE AVAILABILITY OF ALL SPECIFIED ITEMS SO AS NOT TO CREATE A HARDSHIP ON THE OWNER AND NOT TO DELAY PROGRESS OF THE WORK. NO EXTENTION OF TIME TO THE CONTRACT WILL BE ALLOWED FOR THE CONTRACTOR'S INABILITY TO SECURE SPECIFIED ITEMS.

B. CONTRACTOR SHALL PROVIDE AND LOCATE ACESS PANELS AS REQUIRED AFTER INSTALLATION OF MECHANICAL DUCTS, PLUMBING AND ELECTRICAL WORK. COORDINATE WITH ARCHITECT.

C. WHERE FACTORY FINISHED OR FACTORY PRIMED ITEMS OCCUR SUCH AS GRILLS, DIFFUSERS, METAL TRIM AND ACCESSORIES, ETC., THEY SHALL BE PAINTED TO MATCH THE ADJACENT SURFACE AS DIRECTED BY THE ARCHITECT.

D. THE CONTRACTOR SHALL COORDINATE THE WORK AMOUNG ALL TRADES RELATING TO THE MOUNTING AND ATTACHMENTS OF ALL EQUIPMENT AS REQUIRED.

E. THE CONTRACTOR SHALL PROVIDE AND COORDINATE THE EXACT DIMENSIONS, SIZES AND POSITIONS OF OPENINGS IN SLABS AND WALLS NECESSARY FOR THE INSTALLATION OF THE WORK.

F. THE CONTRACTOR SHALL PROVIDE MOUNTING PLATES AS REQUIRED BEHIND ALL WALL-MOUNTED ITEMS SUCH AN HANDRAILS, TOILET PARTITIONS, TOILET ROOM ACCESSORIES, LIGHT FIXTURES, ETC.

18. PROTECTION OF EXISTING UTILITIES
THE CONTRACTOR SHALL MAINTAIN THE UTILITIES TO THE EXISTING BUILDING OR PROVIDE TEMPORARY SERVICE CONNECTIONS AS REQUIRED.

19. DAMAGE AND THEFT
ANY WORK OR MATERIALS OF ONE TRADE DAMAGED BY ANOTHER TRADE BECOMES THE RESPONSIBILITY OF THE OFFENDING TRADE. THE DAMAGED WORK SHALL BE REPAIRED OR REPLACED BY THE ORIGINAL INSTALLER AND THE COSTS BORNE BY THE OFFENDER. ANY MATERIALS STOLEN FROM THE PREMISES OR DAMAGED EITHER BEFORE OR AFTER INSTALLATION SHALL BE REPLACED BY THE CONTRACTOR AT NO ADDITIONAL COST TO THE OWNER. THE CONTRACTOR SHALL TAKE ALL NECESSARY PRECAUTIONS SUCH AS BARRRICADES, GUARDS, ETC., AS REQUIRED TO PREVENT DAMAGE AND THEFT. SPECIAL CARE SHALL BE TAKEN TO PROTECT WORK IN PLACE, MATERIALS AND EQUIPMENT STORED, ETC., FROM THEFT AND VANDALISM.

20. DUST CONTROL AND INTERIOR BARRICADES

A. THE CONTRACTOR SHALL MAINTAIN CONTINUOUS DUST ABATEMENT PROCEDURES INCLUDING VACUUMING, TRASH REMOVAL AND MATS AT ALL ENTRIES TO THE CONSTRUCTION AREA. PROVIDE EFFECTIVE DUST CONTROL BY MEANS OF FREQUENT SPRINKLING AND WATERING. EXCESSIVE BLOWING OF DUST OR CONCRETE MAY BE PUMPED. THE JOB SITE SHALL BE LEFT CLEAN AND ORDERLY AT THE END OF EACH DAY.

B. INTERIOR BARRICADES OF PLYWOOD AND TEMPORARY DUST PARTITION WHICH WILL POSITIVELY PREVENT PASSAGE OF DEBRIS AND DUST SHALL BE PROVIDED AND MAINTAINED DURING THE COURSE OF CONSTRUCTION AS REQUIRED BY SPECIAL INSTRUCTIONS FROM OWNER.

21. CLEAN-UP
THE CONTRACTOR SHALL AT ALL TIMES KEEP THE SITE CLEAN AND FREE OF ALL WASTE MATERIAL OR RUBBISH CAUSED BY HIS OPERATIONS. AT THE COMPLETION OF THE WORK, THE CONTRACTOR SHALL REMOVE ALL WASTE MATERIALS AND RUBBISH FROM AND ABOUT THE PROJECT AS WELL AS ALL TOOLS, CONSTRUCTION EQUIPMENT, MACHINERY AND SURPLUS MATERIALS.

22. GUARANTEE
CONTRACTOR AND/OR SUBCONTRACTORS SHALL GUARANTEE ALL WORKMANSHIP AND MATERIALS FOR AT LEAST ONE YEAR BEYOND DATE OF FINAL INSPECTION APPROVAL.

BLDG. DEPT. NOTES

A. All mechanical and electrical equipment shall have a design listing/number. Any equipment not listed will be required to be field tested and certified by an approved testing agency. It is the responsibility of the owner and his design/construction team to notify the Building Department if field-testing is required for any equipment without an equivalent Listed Label approved by the Fremont Building Department. Proof of equipment certification will need to be submitted and approved before a Certificate of Occupancy can be issued.

B. Equipment installation may require separate permits: Provide calculations and anchorage details for all equipment weighing 400 lbs. or more. Note that equipment at any weight mounted at more than 4 feet above floor height shall be provided with anchorage. [ASCE 7-10 sec. 13.1.4]

C. It is the applicant's responsibility to contact the Fremont Fire Department at 510-494-4200 to submit a Hazardous Material Business Plan (HMBP) as needed for this permit. Building final may be impacted if this item is not submitted for coordination.

D. A separate permit is required prior to work on any fire protection systems or component. Submit three sets of shop drawings, calculations and specifications.

E. Separate permit(s) are required for all shelving and racking installations.

F. Separate permit is required for building signage.

△1

PROJECT TEAM

CLIENT:
SALTALK, INC.
3334 VICTOR CT.,
SANTA CLARA, CA 95054
PHONE: 408-316-8851
CONTACT: JOHN LUO (OWNER REP)

CIVIL ENGINEER:
AMS ASSOCIATES, INC.
801 YGNACIO VALLEY RD., STE. 220
WALNUT CREEK, CA 94596
PHONE: 925-943-2777
CONTACT: AL SHAGHAGHI

ARCHITECT:
CO-AR DESIGN, INC.
680 BREA CANYON RD., STE. 178
DIAMOND BAR, CA 91789
PHONE: 909-598-0186
CONTACT: DENNIS J LEE

STRUCTURE ENGINEER:
D2 STRUCTURAL ENGINEERS, LLC.
730 NIANTIC AVE.,
DALY CITY, CA 94014
PHONE: 415-846-9010
CONTACT: DOUGLAS DENG

MECHANICAL / PLUMBING ENGINEER:
JHP ENGINEERING & DESIGN, INC.
3103 INDEPENDENCE DR., STE. 106
LIVERMORE, CA 94551
PHONE: 925-409-2508
CONTACT: JIA PAN

ELECTRICAL ENGINEER:
JHP ENGINEERING & DESIGN, INC.
3103 INDEPENDENCE DR., STE. 106
LIVERMORE, CA 94551
PHONE: 925-409-2508
CONTACT: RAYMOND ZHAO

HEALTH NOTES

1. THE SET OF PLANS ADDRESSES GENERAL REQUIREMENTS OF A RETAIL FOOD FACILITY AND WILL ONLY BE USED TO FULFILL COMPLIANCE WITH THE SHARED FOOD STORAGE AREAS @ 42550 ALBRAE STREET FOOD FACILITY

2. EACH PROSPECTIVE FOOD OPERATORS MENU IN EACH UNIT WILL BE EVALUATED INDEPENDENTLY AND THIS SET OF PLANS WILL NOT BE USED AS CRITERIA TO APPROVE EACH FOOD OPERATORS' PLANS

3. EQUIPMENT INSTALLATION IN EACH PROSPECTIVE OPERATORS SHALL MEET PLUMBING, MECHANICAL, AND FOOD SAFETY GUIDELINES

4. EACH PROSPECTIVE FOOD OPERATORS TO PROVIDE CERTIFIED KITCHEN EQUIPMENT FOR REVIEW

APPLICABLE CODES

A. 2019 CALIFORNIA BUILDING CODE (CBC)
B. 2019 CALIFORNIA PLUMBING CODE (CPC)
C. 2019 CALIFORNIA MECHANICAL CODE (CMC)
D. 2019 CALIFORNIA ELECTRICAL CODE (CEC)
E. 2019 CALIFORNIA FIRE CODE (CFC)
F. 2019 CALIFORNIA GREEN BUILDING STANDARDS CODE (CGBSC)
G. ENERGY EFFICIENCY STANDARDS
H. Fremont Local Building Ordinance #10-2019 △1
J. Fremont Local Fire Ordinance #11-2019

DEFERRED SUBMITTALS

SEPARATE APPROVAL AND PERMITS SHALL BE OBTAINED FROM THE PLANNING / BUILDING / FIRE DEPARTMENTS BY ALL INSTALLATION CONTRACTORS PRIOR TO INSTALLATION OR MODIFICATION OF THE FOLLOWING:

1. SIGNAGE
2. FIRE SPRINKLER SYSTEM
3. HOOD PROTECTION SYSTEM
4. FIRE ALARM SYSTEM
5. WALK IN COOLERS / WALK IN FREEZERS △5

PROJECT INFORMATION

SCOPE OF WORK
THE SCOPE OF WORK FOR THIS PROJECT INCLUDES:

1. TENANT IMPROVEMENT FOR LIGHT MANUFACTURING MULTIPLE COMMERCIAL KITCHENS WITHIN AN EXISTING INDUSTRIAL SPACE, TOTAL OF APPROXIMATELY 14,423 S.F.
2. PARTITIONS FOR NEW LAYOUT AS SHOWN ON PLANS

PROJECT INFORMATION

ADDRESS:	42550 ALBRAE ST. FREMONT, CA 94538	
ZONING:	I-S	
APN:	525 129601002	
BUILDING CONSTRUCTRED:	1986	
TYPE OF CONSTRUCTION:	III-B △1	
AUTOMATIC SPRINKLER:	YES	
OCCUPANCY GROUP:	F-1	
BUILDING USE:	COMMERCIAL KITCHEN	
FLOOR AREA:	**14,423 SF**	**(SEE AREA DIAGRAM ON A-0.3)**
OCCUPANT LOAD:	**140**	**(SEE AREA DIAGRAM ON A-0.3)**
EXITS REQUIRED:	**2**	
EXITS PROVIDED:	**4**	
MAX. TRAVEL DISTANCE:	**250 FT**	
MAX. COMMON PATH OF TRAVEL:	**75 FT**	

PARKING INFORMATION (SEE A-0.3 AREA DIAGRAM)

PROPOSED USE:
CATERING KITCHEN (INDUSTRIAL) USES: (14,423 S.F.)
3.3 PER KSF = 14,423 S.F. x 3.3 / 1000 = **47.6** PARKING SPACES

EXISTING ADJACENT TENANT(S):
CROSSFIT JIGSAW (6,600 S.F.)
MIN. 10 + 2/1000 IN EXCESS OF 1000 =
10 + (5,600 x 2 / 1000) = **21.2** SPACES

VACANT / SPECULATIVE (10,758 S.F.)
3.3/1000 = 10,758 x 3.3 / 1000 = **35.5** SPACES

TOTAL REQUIRED FOR BUILDING:
47.6 + 21.2 + 35.5 = 104.3 **= 105**

TOTAL EXISTING = **134** SPACES
ACCESSIBLE PARKING:6 (5 REQUIRED)

VICINITY MAP

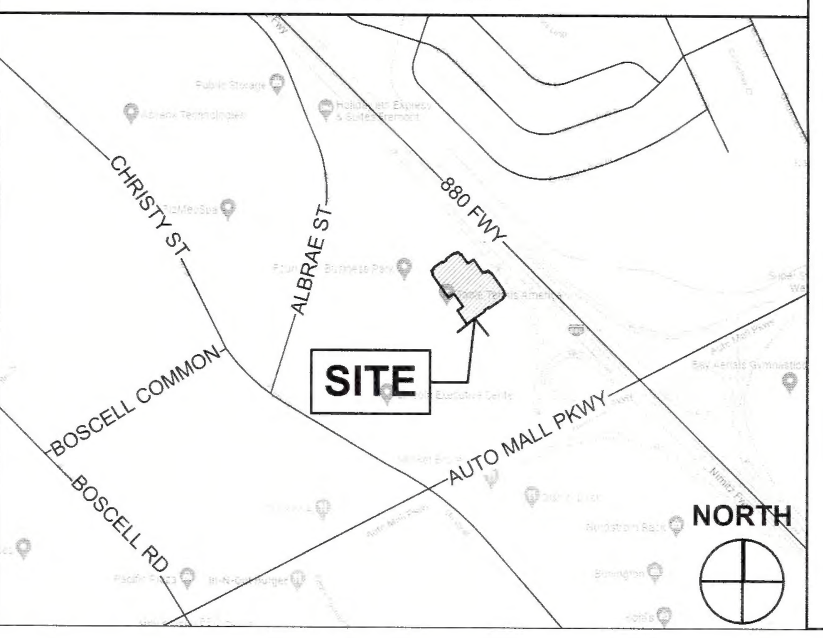

SHEET INDEX

ARCHITECTURAL
A-0.1 COVER SHEET
A-0.2 CLEAN BAY PLAN SHEET
A-0.3 AREA DIAGRAM / EXIT ANALYSIS / PLUMBING AREA DIAGRAM
A-0.4 DESIGN SPECIFICATIONS
A-0.5 DESIGN SPECIFICATIONS
A-0.6 CAL GREEN NONRESIDENTIAL CHECKLIST △1
A-1.0 CONTEXT MAP
A-1.1 SITE PLAN
A-1.2 ENLARGED SITE PLAN △1
A-2.1 EXISTING / DEMO PLAN
A-2.2 PROPOSED FLOOR PLAN
A-2.2A FRAMING & DIMENSION PLAN
A-2.3 EQUIPMENT PLAN
A-2.4 FLOOR FINISH PLAN & SCHEDULE
A-2.5 REFLECTED CEILING PLAN
A-2.6 EXISTING / DEMO ROOF PLAN
A-2.7 PROPOSED ROOF PLAN
A-3.1 BUILDING SECTIONS
A-3.2 BUILDING SECTIONS
A-4.1 ENLARGED KITCHEN PROTOTYPE
A-4.2 RESTRM ENLARGED PLAN / INTERIOR ELEVATIONS
A-4.3 PICK UP / BREAK RM ENLARGED PLAN / INTERIOR ELEVATIONS
A-5.1 ARCHITECTURAL DETAILS
A-5.2 ARCHITECTURAL DETAILS
A-5.3 UL U465 SPECIFICATIONS △1
A-6.1 DOOR SCHEDULES

△1
CIVIL
C-2.1 GENERAL NOTES
C-3.1 GRADING & UTILITY PLAN

STRUCTURE
S-0.1 GENERAL NOTES
S-1.1 ROOF FRAMING PLAN
S-5.1 DETAILS
S-5.2 DETAILS
S-5.3 TRASH ENCLOSURE PLANS & DETAILS △1

ELECTRICAL
E-0.1 ELECTRICAL NOTES AND INFORMATION
E-0.2 ENERGY COMPLIANCE FORMS
E-0.3 LIGHTING SCHEDULE AND CONTROL DIAGRAM
E-0.4 SINGLE-LINE DIAGRAM AND PANEL SCHEDULES
E-0.5 ELECTRICAL INSTALLATION DETAILS
E-1.0 POWER PLAN - GROUND FLOOR
E-1.1 POWER PLAN - ROOF
E-2.0 LIGHTING PLAN - GROUND FLOOR

MECHANICAL
M-0.1 GENERAL NOTES, CODES, AND SCOPE OF WORK
M-0.2 LEGENDS AND ABBREVIATIONS
M-0.3 MECHANICAL EQUIPMENT SCHEDULES
M-0.4 MECHANICAL EQUIPMENT SCHEDULES
M-0.5 MECHANICAL EQUIPMENT SCHEDULES
M-0.6 MECHANICAL DETAILS
M-0.7 MECHANICAL DETAILS
M-0.8 MECHANICAL DETAILS
M-1.0 MECHANICAL RCP - AREA A
M-1.1 MECHANICAL RCP - AREA B
M-2.0 MECHANICAL ROOF DEMO PLAN
M-2.1 MECHANICAL ROOF PLAN - AREA A
M-2.2 MECHANICAL ROOF PLAN - AREA B
M-3.0 KITCHEN HOOD INFORMATION
M-3.1 KITCHEN HOOD DETAILS
M-3.2 KITCHEN HOOD DETAILS
M-3.3 KITCHEN HOOD DETAILS
M-3.4 KITCHEN HOOD DETAILS
M-3.5 SPECIFICATIONS
M-3.6 KITCHEN EXHAUST CONTROL WIRING DIAGRAM
M-3.7 KITCHEN EXHAUST CONTROL WIRING DIAGRAM
M-3.8 KEF AND MAU SCHEDULES
M-3.9 KITCHEN EXHAUST FAN DETAILS
M-4.0 KITCHEN EXHAUST FAN AND MAU DETAILS
M-4.1 KITCHEN EXHAUST FAN AND MAU DETAILS
M-4.2 KITCHEN EXHAUST FAN AND MAU DETAILS
M-4.3 KITCHEN EXHAUST FAN AND MAU DETAILS
M-4.4 KITCHEN EXHAUST FAN AND MAU DETAILS
M-4.5 KITCHEN EXHAUST FAN AND MAU DETAILS
M-4.6 KITCHEN EXHAUST FAN AND MAU DETAILS
M-5.0 MECHANICAL PRESCRIPTIVE TITLE 24 COMPLIANCE
M-5.1 MECHANICAL PRESCRIPTIVE TITLE 24 COMPLIANCE
M-5.2 MECHANICAL PRESCRIPTIVE TITLE 24 COMPLIANCE

PLUMBING
P-0.1 GENERAL NOTES, SCOPE OF WORK, SYMBOLS & LEGEND
P-0.2 SCHEDULES, CALCULATIONS & TABLES
P-0.3 PLUMBING DETAILS
P-0.4 WATER HEATER TITLE 24 COMPLIANCE
P-0.5 WATER HEATER TITLE 24 COMPLIANCE
P-1.0 GROUND FLOOR DOMESTIC WATER PIPING PLAN
P-1.1 GROUND FLOOR DOMESTIC WATER PIPING PLAN - AREA A
P-1.2 GROUND FLOOR DOMESTIC WATER PIPING PLAN - AREA B
P-2.0 GROUND FLOOR WASTE AND VENT PIPING PLAN
P-2.1 GROUND FLOOR WASTE AND VENT PIPING PLAN - AREA A
P-2.2 GROUND FLOOR WASTE AND VENT PIPING PLAN - AREA B
P-3.0 NATURAL GAS AND CONDENSATE PIPING PLAN - AREA A
P-3.1 NATURAL GAS AND CONDENSATE PIPING PLAN - AREA B
P-4.0 PLUMBING ROOF PIPING PLAN - AREA A
P-4.1 PLUMBING ROOF PIPING PLAN - AREA B
P-5.0 GAS PIPING ISOMETRIC DIAGRAM △1

CO-AR DESIGN, INC.
680 Brea Canyon Rd., Ste. 178
Diamond Bar, CA 91789

Office: 909-598-0186
http:\\www.coardesign.com

Dennis J. Lee, Architect
dennisl@coardesign.com

THESE DRAWINGS ARE THE PROPERTY OF THE ARCHITECT. THE DESIGNS SHOWN AND DESCRIBED HERIN INCLUDING ALL TECHNICAL DRAWINGS ARE PROPRIETARY AND CANNOT BE COPIED, DUPLICATED OR COMMERCIALLY EXPLOITED, IN WHOLE OR IN PART. THE DRAWINGS AND SPECIFICATIONS SHALL NOT BE USED BY THE OWNER ON OTHER PROJECTS, FOR ADDITIONS TO THIS PROJECT, OR FOR COMPLETION OF THIS PROJECT BY OTHERS. THE OWNER AGREES TO HOLD HARMLESS, INDEMNIFY AND DEFEND THE ARCHITECT AGAINST ALL DAMAGES, CLAIMS AND LOSSES, INCLUDING DEFENSE COSTS, ARISING OUT OF ANY REUSE OF THE PLANS AND SPECIFICATIONS WITHOUT THE WRITTEN AUTHORIZATION OF THE ARCHITECT OF RECORD.

COPYRIGHT © 2022 CO-AR DESIGN, INC., ALL RIGHTS RESERVED.

SEAL:
LICENSED ARCHITECT
DENNIS JOON HO LEE
C-29168
4/30/2023
RENEWAL DATE
STATE OF CALIFORNIA

NOTES:

PROJECT:
SALTALK FREMONT KITCHEN TENANT IMPROVEMENT

42550 ALBRAE ST.,
FREMONT, CA 94538

CLIENT:
SALTALK, INC.
3334 VICTOR CT.,
SANTA CLARA, CA 95054

SUBMITTALS/ REVISIONS:

4	1ST PLANNING SUBMITTAL		2/10/22
5	SD		3/7/22
6	1ST HEALTH SUBMITTAL		4/7/22
7	1ST BLDG SUBMITTAL		4/11/22
8	2ND BLDG SUBMITTAL	△1	7/29/22
9	3RD USD SUBMITTAL	△3	9/12/22
10	2ND HEALTH SUBMITTAL	△4	xx/xx/22
11	3RD BLDG SUBMITTAL	△5	xx/xx/22

PROJECT NO:	202201
SCALE:	AS SHOWN
DATE:	10/4/2022
DRAWN BY:	ED / FW
CHECKED BY:	DL

SHEET TITLE:
COVER SHEET

SHEET NO:
A-0.1

BIMcloud: COAR-CONFERENCE - BIMcloud Basic for Archicad 26/202201 Fremont Ghost Kitchen Tuesday, October 04, 202

Clean Bay Blue Print

Alameda County
Dept. of Environmental Health
Approved By: T. Tran

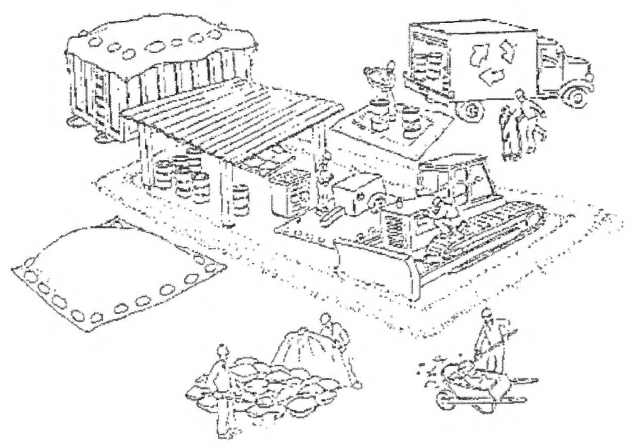

Make sure your crews and subs do the job right!

Runoff from streets and other paved areas is a major source of pollution and damage to creeks and the San Francisco Bay. Construction activities can directly affect the health of creeks and the Bay unless contractors and crews plan ahead to keep dirt, debris, and other construction waste away from storm drains and local creeks. Following these guidelines and the project specifications will ensure your compliance with **City of Fremont** requirements.

Materials storage & spill cleanup

Non-hazardous materials management

- Sand, dirt, and similar materials must be stored at least 10 feet (3 meters) from catch basins. All construction material must be covered with a tarp and contained with a perimeter control during wet weather or when rain is forecasted or when not actively being used within 14 days.
- Use (but don't overuse) reclaimed water for dust control as needed.
- Sweep or vacuum streets and other paved areas daily. Do not wash down streets or work areas with water!
- Recycle all asphalt, concrete, and aggregate base material from demolition activities. Comply with **City of Fremont** Ordinances for recycling construction materials, wood, gyp board, pipe, etc.
- Check dumpsters regularly for leaks and to make sure they are not overfilled. Repair or replace leaking dumpsters promptly.
- Cover all dumpsters with a tarp at the end of every work day or during wet weather.

Hazardous materials management

- Label all hazardous materials and hazardous wastes (such as pesticides, paints, thinners, solvents, fuel, oil, and antifreeze) in accordance with city, county, state, and federal regulations.
- Store hazardous materials and wastes in water tight containers, store in appropriate secondary containment, and cover them at the end of every work day or during wet weather or when rain is forecasted.
- Follow manufacturer's application instructions for hazardous materials and be careful not to use more than necessary. Do not apply chemicals outdoors when rain is forecasted within 24 hours.
- Be sure to arrange for appropriate disposal of all hazardous wastes.

Spill prevention and control

- Keep a stockpile of spill cleanup materials (rags, absorbents, etc.) available at the construction site at all times.
- When spills or leaks occur, contain them immediately and be particularly careful to prevent leaks and spills from reaching the gutter, street, or storm drain. Never wash spilled material into a gutter, street, storm drain, or creek!
- Dispose of all containment and cleanup materials properly.
- Report any hazardous materials spills immediately! Dial 911

Construction Entrances and Perimeter

- Establish and maintain effective perimeter controls and stabilize all construction entrances and exits to sufficiently control erosion and sediment discharges from site and tracking off site.
- Sweep or vacuum any street tracking immediately and secure sediment source to prevent further tracking.

Vehicle and equipment maintenance & cleaning

- Inspect vehicles and equipment for leaks frequently. Use drip pans to catch leaks until repairs are made; repair leaks promptly.
- Fuel and maintain vehicles on site only in a bermed area or over a drip pan that is big enough to prevent runoff.
- If you must clean vehicles or equipment on site, clean with water only in a bermed area that will not allow rinse water to run into gutters, streets, storm drains, or creeks.
- Do not clean vehicles or equipment on-site using soaps, solvents, degreasers, steam cleaning equipment, etc.

Earthwork & contaminated soils

- Keep excavated soil on the site where it will not collect in the street.
- Transfer to dump trucks should take place on the site, not in the street.
- Use fiber rolls, silt fences, or other control measures to minimize the flow of silt off the site.

- Earth moving activities are only allowed during dry weather by permit and as approved by the City Inspector in the Field.
- Mature vegetation is the best form of erosion control. Minimize disturbance to existing vegetation whenever possible.
- If you disturb a slope during construction, prevent erosion by securing the soil with erosion control fabric, or seed with fast-growing grasses as soon as possible. Place fiber rolls down-slope until soil is secure.
- If you suspect contamination (from site history, discoloration, odor, texture, abandoned underground tanks or pipes, or buried debris), call the Engineer for help in determining what should be done, and manage disposal of cntaminated soil according to their instructions.

Dewatering operations

- Effectively manage all run-on, all runoff within the site, and all runoff that discharges from the site. Run-on from off site shall be directed away from all disturbed areas or shall collectively be in compliance.
- Reuse water for dust control, irrigation, or another on-site purpose to the greatest extent possible.

- Be sure to notify and obtain approval from the Engineer before discharging water to a street, gutter, or storm drain. Filtration or diversion through a basin, tank, or sediment trap may be required.
- In areas of known contamination, testing is required prior to reuse or discharge of groundwater. Consult with the Engineer to determine what testing is required and how to interpret results. Contaminated groundwater must be treated or hauled off-site for proper disposal.

Saw cutting

- Always completely cover or barricade storm drain inlets when saw cutting. Use filter fabric, catch basin inlet filters, or sand/gravel bags to keep slurry out of the storm drain system.
- Shovel, absorb, or vacuum saw-cut slurry and pick up all waste as soon as you are finished in one location or at the end of each work day (whichever is sooner!).
- If saw cut slurry enters a catch basin, clean it up immediately.

Paving/asphalt work

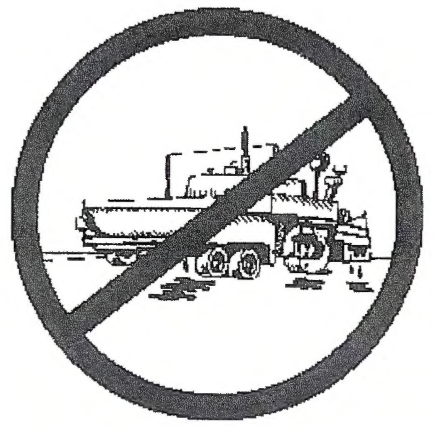

- Always cover storm drain inlets and manholes when paving or applying seal coat, tack coat, slurry seal, or fog seal.
- Protect gutters, ditches, and drainage courses with sand/gravel bags, or earthen berms.
- Do not sweep or wash down excess sand from sand sealing into gutters, storm drains, or creeks. Collect sand and return it to the stockpile, or dispose of it as trash.
- Do not use water to wash down fresh asphalt concrete pavement.

Concrete, grout, and mortar storage & waste disposal

- Store concrete, grout, and mortar under cover, on pallets, and away from drainage areas. These materials must never reach a storm drain.
- Wash out concrete equipment/trucks off-site or into contained washout areas that will not allow discharge of wash water onto the underlying soil or onto the surrounding areas.

- Collect the wash water from washing exposed aggregate concrete and remove it for appropriate disposal off site.

Painting

- Never rinse paint brushes or materials in a gutter or street!
- Paint out excess water-based paint before rinsing brushes, rollers, or containers in a sink.
- Paint out excess oil-based paint before cleaning brushes in thinner.
- Filter paint thinners and solvents for reuse whenever possible. Dispose of oil-based paint sludge and unusable thinner as hazardous waste.

Landscape Materials

- Contain, cover, and store on pallets all stockpiled landscape materials (mulch, compost, fertilizers, etc.) during wet weather or when rain is forecasted or when not actively being used within 14 days.
- Discontinue the application of any erodible landscape material within 2 days of forecasted rain and during wet weather.

Storm drain polluters may be liable for fines of $10,000 or more per day!

For references and more detailed information:
www.cleanwaterprogram.org
www.cabmphandbooks.com

N:\Standards\2008SDSK\2008 WBLOCKS\Sheet 2 - Pollution Prevention-F.dwg 3-25-11 12:09:06 PM doniele

NO.	DESCRIPTION	BY	DATE	APPV'D
1				
2				
3				
4				
5				

REVISIONS

ADV DATE

APPROVED

WORK ORDER NO.
SPECIFICATION NO.
SHEET NO.
FILE NO.

CLEAN BAY BLUE PRINT

CO-AR DESIGN, INC.
680 Brea Canyon Rd., Ste. 178
Diamond Bar, CA 91789

Office: 909-598-0186
http:\\www.coardesign.com

Dennis J. Lee, Architect
dennisl@coardesign.com

THESE DRAWINGS ARE THE PROPERTY OF THE ARCHITECT. THE DESIGNS SHOWN AND DESCRIBED HERIN INCLUDING ALL TECHNICAL DRAWINGS ARE PROPRIETARY AND CANNOT BE COPIED, DUPLICATED OR COMMERCIALLY EXPLOITED, IN WHOLE OR IN PART. THE DRAWINGS AND SPECIFICATIONS SHALL NOT BE USED BY THE OWNER ON OTHER PROJECTS, FOR ADDITIONS TO THIS PROJECT, OR FOR COMPLETION OF THIS PROJECT BY OTHERS. THE OWNER AGREES TO HOLD HARMLESS, INDEMNIFY AND DEFEND THE ARCHITECT AGAINST ALL DAMAGES, CLAIMS AND LOSSES, INCLUDING DEFENSE COSTS, ARISING OUT OF ANY REUSE OF THE PLANS AND SPECIFICATIONS WITHOUT THE WRITTEN AUTHORIZATION OF THE ARCHITECT OF RECORD.

COPYRIGHT © 2022 CO-AR DESIGN, INC., ALL RIGHTS RESERVED.

SEAL:
LICENSED ARCHITECT
DENNIS JOON HO LEE
C-29168
4/30/2023
RENEWAL DATE
STATE OF CALIFORNIA

NOTES:

PROJECT:
SALTALK FREMONT KITCHEN TENANT IMPROVEMENT

42550 ALBRAE ST.,
FREMONT, CA 94538

CLIENT:
SALTALK, INC.
3334 VICTOR CT.,
SANTA CLARA, CA 95054

SUBMITTALS/ REVISIONS:

4	1ST PLANNING SUBMITTAL		2/10/22
5	SD		3/7/22
6	1ST HEALTH SUBMITTAL		4/7/22
7	1ST BLDG SUBMITTAL		4/11/22
8	2ND BLDG SUBMITTAL	1	7/29/22
9	3RD USD SUBMITTAL	3	9/12/22
10	2ND HEALTH SUBMITTAL	4	xx/xx/22
11	3RD BLDG SUBMITTAL	5	xx/xx/22

PROJECT NO:	202201
SCALE:	AS SHOWN
DATE:	10/4/2022
DRAWN BY:	ED / FW
CHECKED BY:	DL

SHEET TITLE:
CLEAN BAY PLAN SHEET

SHEET NO:
A-0.2

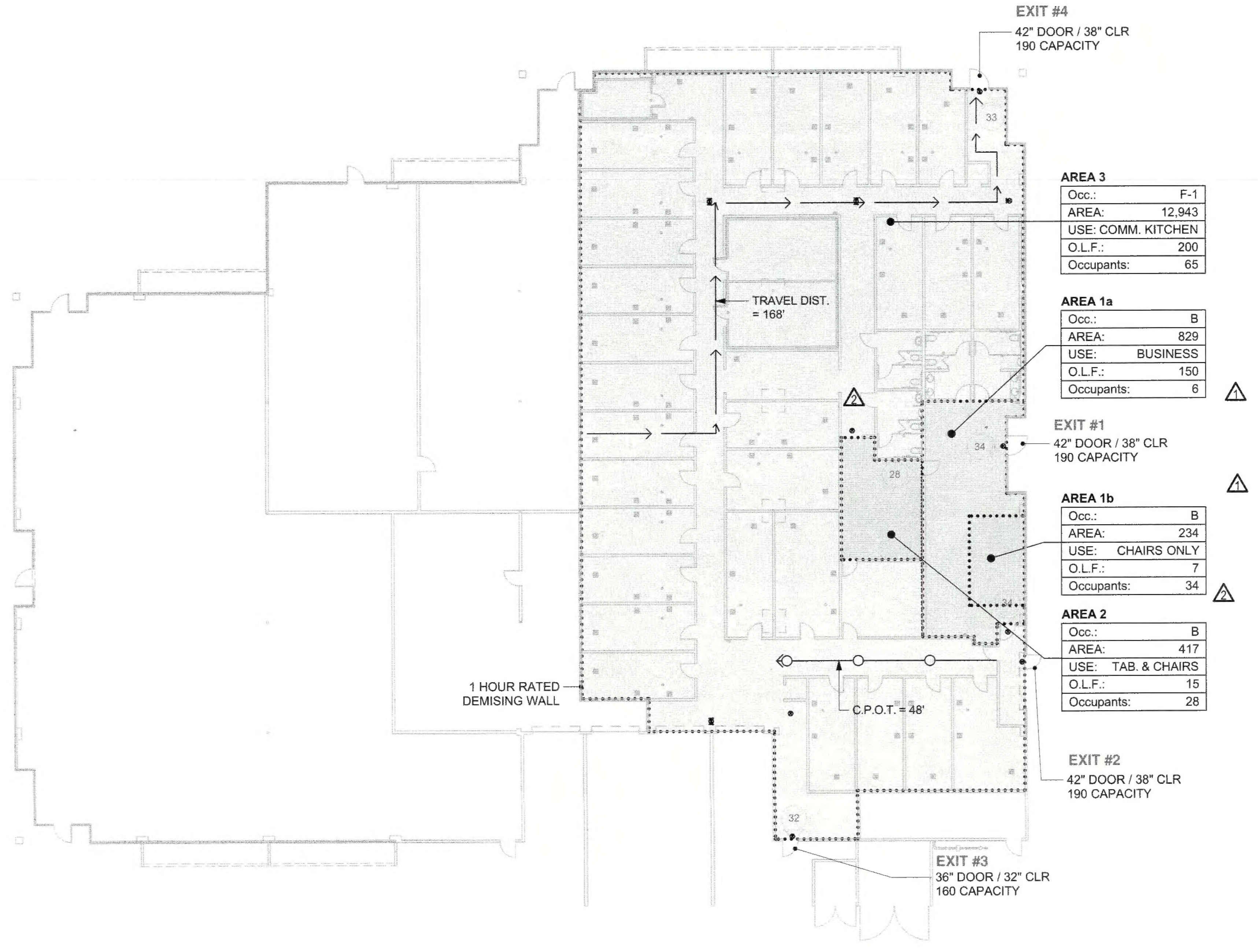

AREA DIAGRAM / EXIT ANALYSIS (1)
SCALE: 1" = 20'

OCCUPANCY & OCCUPANT LOAD SCHEDULE					
ID	AREA	OCC.	FUNCTION OF SPACE	O.L.F.	OCCUPANTS
AREA 1a	829	B	BUSINESS	150	6
AREA 1b	234	B	CHAIRS ONLY	7	34
AREA 2	417	B	TAB. & CHAIRS	15	28
AREA 3	12,943	F-1	COMM. KITCHEN	200	65
	14,423 ft²				**133**

CONSTRUCTION TYPE: **III-A**
SPRINKLERED: **YES**
NUMBER OF STORIES: **1**
FLOOR AREA: **14,423 S.F.**
OCCUPANCY: **F-1**
OCCUPANT LOAD: **133**

EXIT REQUIREMENTS:
OF EXITS RQUIRED: **2**
EXIT WIDTH REQUIRED: 133 x 0.2 IN / OCCUPANT = **27"** REQUIRED
MAX. TRAVEL DISTANCE: **250 FEET**
MAX. COMMON PATH OF TRAVEL:
F OCCUPANCY **100 FEET**
DEAD END CORRIDORS: **50 FEET**

EXIT PROVIDED:

EXIT #1	42" SWING DOOR	38" CLR
EXIT #2	42" SWING DOOR	38" CLR
EXIT #3	36" SWING DOOR	32" CLR
EXIT #4	42" SWING DOOR	38" CLR

OF EXITS: 4 (2 REQ., O.K.)
TOTAL EXIT WIDTH: 146" (27" REQ., O.K.)

50% CAPACITY: LOSS OF ANY ONE MEANS OF EGRESS SHALL NOT REDUCE THE AVAILABLE CAPACITY TO LESS THAN 50 PERCENT OF THE REQUIRED CAPACITY.
REQUIRED: 27" / 2 = 14"
PROVIDED: 146" - 38" = 108" > 14", OK

Alameda County
Dept. of Environmental Health
Approved By: T. Tran

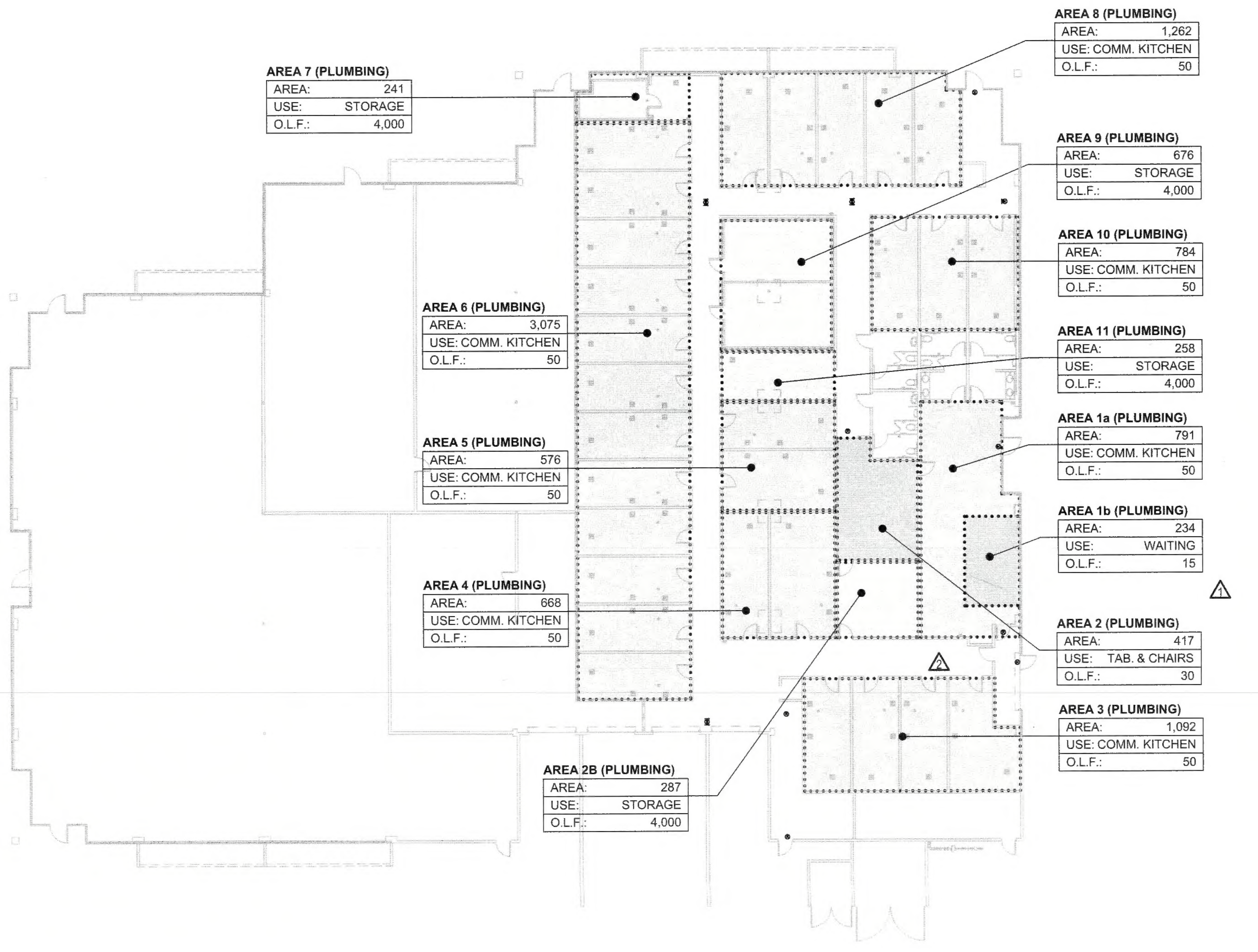

PLUMBING AREA DIAGRAM (2)
SCALE: 1" = 20'

Occupant Load Schedule (Plumbing)			
ID	FUNCTION OF SPACE	O.L.F.	AREA
AREA 1a (PLUMBING)	COMM. KITCHEN	50	791
AREA 1b (PLUMBING)	WAITING	15	234
AREA 2 (PLUMBING)	TAB. & CHAIRS	30	417
AREA 2B (PLUMBING)	STORAGE	4000	287
AREA 3 (PLUMBING)	COMM. KITCHEN	50	1,092
AREA 4 (PLUMBING)	COMM. KITCHEN	50	668
AREA 5 (PLUMBING)	COMM. KITCHEN	50	576
AREA 6 (PLUMBING)	COMM. KITCHEN	50	3,075
AREA 7 (PLUMBING)	STORAGE	4000	241
AREA 8 (PLUMBING)	COMM. KITCHEN	50	1,262
AREA 9 (PLUMBING)	STORAGE	4000	676
AREA 10 (PLUMBING)	COMM. KITCHEN	50	784
AREA 11 (PLUMBING)	STORAGE	4000	258
			10,361 ft²

PLUMBING FIXTURES CALCULATION (2019 CPC)

KITCHEN AREA (F):	8,248 SF/ 50 = 165	83 MALE / 83 FEMALE
STORAGE AREA (S):	1,462 SF/4000 = 1	1 MALE / 1 FEMALE
SEATING AREA (A):	651 SF/ 30 = 22	11 MALE / 11 FEMALE

REQUIRED	WATER CLOSETS		UR.	LAVS		D.F.	S.S.
	MALE	FEMALE		MALE	FEMALE		
KITCHEN (F)	1/50 1/25 2.32	1/50 1/25 2.32		1/50 1/25 2.32	1/50 1/25 2.32	1/250 0.66	
STORAGE (S)	1/100 0.01	1/100 0.01		1/200 0.01	1/200 0.01	1/250 0.01	
SEATING (A)	1/50 0.22	1/25 0.44	1/200 0.06	1/150 0.08	1/150 0.08	1/250 0.09	
TOTAL	2.55=3	2.77=3	0.06=1	2.41=3	2.41=3	0.76=1	1

PROVIDED	WATER CLOSETS		UR.	LAVS		D.F.	S.S.
	MALE	FEMALE		MALE	FEMALE		
TOTAL	3	4	2	3	3	2	2

CO-AR DESIGN, INC.
680 Brea Canyon Rd., Ste. 178
Diamond Bar, CA 91789

Office: 909-598-0186
http:\\www.coardesign.com

Dennis J. Lee, Architect
dennisl@coardesign.com

THESE DRAWINGS ARE THE PROPERTY OF THE ARCHITECT. THE DESIGNS SHOWN AND DESCRIBED HERIN INCLUDING ALL TECHNICAL DRAWINGS ARE PROPRIETARY AND CANNOT BE COPIED, DUPLICATED OR COMMERCIALLY EXPLOITED, IN WHOLE OR IN PART. THE DRAWINGS AND SPECIFICATIONS SHALL NOT BE USED BY THE OWNER ON OTHER PROJECTS, FOR ADDITIONS TO THIS PROJECT, OR FOR COMPLETION OF THIS PROJECT BY OTHERS. THE OWNER AGREES TO HOLD HARMLESS, INDEMNIFY AND DEFEND THE ARCHITECT AGAINST ALL DAMAGES, CLAIMS AND LOSSES, INCLUDING DEFENSE COSTS, ARISING OUT OF ANY REUSE OF THE PLANS AND SPECIFICATIONS WITHOUT THE WRITTEN AUTHORIZATION OF THE ARCHITECT OF RECORD.

COPYRIGHT © 2022 CO-AR DESIGN, INC., ALL RIGHTS RESERVED.

SEAL:
LICENSED ARCHITECT
DENNIS JOON HO LEE
C-29168
4/30/2023
RENEWAL DATE
STATE OF CALIFORNIA

NOTES:

PROJECT:
SALTALK FREMONT KITCHEN TENANT IMPROVEMENT

42550 ALBRAE ST.,
FREMONT, CA 94538

CLIENT:
SALTALK, INC.
3334 VICTOR CT.,
SANTA CLARA, CA 95054

SUBMITTALS/ REVISIONS:

4	1ST PLANNING SUBMITTAL		2/10/22
5	SD		3/7/22
6	1ST HEALTH SUBMITTAL		4/7/22
7	1ST BLDG SUBMITTAL		4/11/22
8	2ND BLDG SUBMITTAL	1	7/29/22
9	3RD USD SUBMITTAL	3	9/12/22
10	2ND HEALTH SUBMITTAL	4	xx/xx/22
11	3RD BLDG SUBMITTAL	5	xx/xx/22

PROJECT NO.	202201
SCALE	AS SHOWN
DATE	10/4/2022
DRAWN BY	ED / FW
CHECKED BY	DL

SHEET TITLE:
AREA DIAGRAM / EXIT ANALYSIS / PLUMBING AREA DIAGRAM

SHEET NO:
A-0.3

SECTION 00 72 00
GENERAL CONDITIONS

1. General Conditions: AIA A201, General Conditions of the Contract for Construction.
2. General Conditions: AIA A271, General Conditions of the Contract for Furniture, Furnishings and Equipment.
3. General Conditions Forms: General Conditions are available from the American Institute of Architects, Washington, D.C., 202-626-7300.

END OF SECTION

SECTION 01 10 00
SUMMARY

PART 1 GENERAL
1.1 SUMMARY
A. Project Identification: See drawings.
B. Project Summary: See drawings.
C. Permits and Fees: Apply for, obtain, and pay for permits, fees, and utility company backcharges required to perform the work. Submit copies to Architect.
D. Codes: Comply with applicable codes and regulations of authorities having jurisdiction. Submit copies of inspection reports, notices and similar communications to Architect.
E. Dimensions: Verify dimensions indicated on drawings with field dimensions before fabrication or ordering of materials. Do not scale drawings.
F. Existing Conditions: Notify Architect of existing conditions differing from those indicated on the drawings. Do not remove or alter structural components without prior written approval.
G. Coordination:
1. Coordinate the work of all trades.
2. Prepare coordination drawings for areas above ceilings where close tolerances are required between building elements and mechanical and electrical work.
3. Verify location of utilities and existing conditions.
H. Installation Requirements, General:
1. Inspect substrates and report unsatisfactory conditions in writing.
2. Do not proceed until unsatisfactory conditions have been corrected.
3. Take field measurements prior to fabrication where practical. Form to required shapes and sizes with true edges, lines and angles. Provide inserts and templates as needed for work of other trades.
4. Install materials in exact accordance with manufacturer's instructions and approved submittals.
5. Install materials in proper relation with adjacent construction and with proper appearance.
6. Restore units damaged during installation. Replace units which cannot be restored at no additional expense to the Owner.
7. Refer to additional installation requirements and tolerances specified under individual specification sections.
I. Limit of Use: Limit use of work as indicated. Keep driveways and entrances clear.
J. Existing Construction: Maintain existing building in a weathertight condition. Repair damage caused by construction operations. Protect building and its occupants.
K. Definitions:
1. Provide: Furnish and install, complete with all necessary accessories, ready for intended use. Pay for all related costs.
2. Approved: Acceptance of item submitted for approval. Not a limitation or release for compliance with the Contract Documents or regulatory requirements. Refer to limitations of 'Approved' in General and Supplementary Conditions.
3. Match Existing: Match existing as acceptable to the Owner.
L. Intent: Drawings and specifications are intended to provide the basis for proper completion of the work suitable for the intended use of the Owner. Anything not expressly set forth but which is reasonably implied or necessary for proper performance of the project shall be included.
M. Writing Style: Specifications are written in the imperative mode. Except where specifically intended otherwise, the subject of all imperative statements is the Contractor. For example, 'Provide tile' means 'Contractor shall provide tile.'

PART 2 PRODUCTS - Not Applicable To This Section
PART 3 EXECUTION - Not Applicable To This Section

END OF SECTION

SECTION 01 30 00
ADMINISTRATIVE REQUIREMENTS

PART 1 GENERAL
1.1 SUMMARY
A. Administration of Contract: Provide administrative requirements for the proper coordination and completion of work including the following:
1. Supervisory personnel.
2. Preconstruction conference.
3. Project meetings, minimum of two per month; prepare and distribute minutes.
B. Reports: Submit daily and special reports.
C. Work Schedule: Submit progress schedule, updated monthly.
D. Submittal Schedule: Prepare submittal schedule; coordinate with progress schedule.
E. Schedule of Values: Submit schedule of values.
F. Schedule of Tests: Submit schedule of required tests including payment and responsibility.
G. Perform Surveys: Lay out the work and verifying locations during construction. Perform final site survey.
H. Emergency Contacts: Submit and post a list of emergency telephone numbers and address for individuals to be contacted in case of emergency.
I. Record Documents: Submit record drawings and specifications; to be maintained and annotated by Contractor as work progresses.

1.2 SUBMITTALS
A. Types of Submittals: Provide types of submittals listed in individual sections and number of copies required below.
1. Shop drawings, reviewed and annotated by the Contractor - 4 copies.
2. Product data - 4 copies.
3. Samples - 2, plus extra samples as required to indicate range of color, finish, and texture to be expected.
4. Inspection and test reports - 4 copies.
5. Warranties - 4 copies.
6. Survey data - 4 copies.
7. Closeout submittals - 4 copies.
8. Project photographs - 12 digital images each month submitted on CD. Submit cumulative CD at each subsequent submittal. Label each image with date.
B. Submittal Procedures: Comply with project format for submittals. Comply with submittal procedures established by Architect including Architect's submittal and shop drawing stamp. Provide resubmittals if original submittals are not approved. Provide distribution of approved copies including modifications required by Architect have been approved.
C. Samples and Shop Drawings: Samples and shop drawings shall be prepared specifically for this project. Shop drawings shall include dimensions and details, including adjacent construction and related work. Note special coordination required. Note any deviations from requirements of the Contract Documents.
D. Warranties: Provide warranties as specified; warranties shall not limit length of time for remedy of damages Owner may have by legal statute. Contractor, supplier or installer responsible for performance of warranty shall sign warranties.

PART 2 PRODUCTS - Not Applicable To This Section
PART 3 EXECUTION - Not Applicable To This Section

END OF SECTION

SECTION 01 40 00
QUALITY REQUIREMENTS

PART 1 GENERAL
1.1 SUMMARY
A. Quality Monitoring: Monitor quality control over suppliers, manufacturers, products, services, site conditions, and workmanship, to produce Work of specified quality. Perform quality control procedures and inspections during installation.
B. Standards: Comply with specified standards as minimum quality for the Work except where more stringent tolerances, codes, or specified requirements indicate higher standards or more precise workmanship.
C. Tolerances: Monitor fabrication and installation tolerance control of products to produce acceptable Work. Do not permit tolerances to accumulate. Comply with manufacturers' tolerances.
D. Reference Standards: For products or workmanship specified by association, trade, or other consensus standards, comply with requirements of the standard, except when more rigid requirements are specified or are required by applicable codes.
E. Manufacturer's Field Services: When specified in individual specification sections, require material or product suppliers or manufacturers to provide qualified staff personnel to perform the following as applicable, and to initiate instructions when necessary.
1. Observe site conditions.
2. Conditions of surfaces and installation.
3. Quality of workmanship.
4. Start-up of equipment.
5. Test, adjust and balance of equipment.
F. Mock-Ups: Assemble and erect specified items with specified attachment and anchorage devices, flashings, seals, and finishes. Accepted mock-ups shall be a comparison standard for the remaining Work.
G. Removal of Mock-Ups: Where mock-up has been accepted by Architect and no longer needed, remove mock-up and clear area when directed to do so.

PART 2 PRODUCTS - Not Applicable To This Section
PART 3 EXECUTION - Not Applicable To This Section

END OF SECTION

SECTION 01 50 00
TEMPORARY FACILITIES AND CONTROLS

PART 1 GENERAL
1.1 SUMMARY
A. Temporary Services: Provide temporary services and utilities, including payment of utility costs including the following.
1. Water (potable and non-potable).
2. Lighting and power.
3. Metering.
4. Telephone.
5. Toilet facilities.
6. Materials storage.
B. Construction Facilities: Provide construction facilities, including payment of utility costs including the following.
1. Construction equipment.
2. Dewatering and pumping.
3. Enclosures.
4. Heating.
5. Lighting.
6. Elevator.
7. Access.
8. Roads.
C. Security and Protection: Provide security and protection requirements including the following.
1. Fire extinguishers.
2. Site enclosure fence, barricades, warning signs, and lights.
3. Building enclosure and lock-up.
4. Environmental protection.
5. Pest control during and at the end of construction.
6. Snow and ice removal if applicable.
D. Personnel Support: Provide personnel support facilities including the following.
1. Architect's field office with telephone, fax and data connection.
2. Contractor's field office.
3. Sanitary facilities.
4. Drinking water.
5. Project identification sign.
6. Cleaning.

PART 2 PRODUCTS - Not Applicable To This Section
PART 3 EXECUTION - Not Applicable To This Section

END OF SECTION

SECTION 01 60 00
PRODUCT REQUIREMENTS

PART 1 GENERAL
1.1 SUMMARY
A. Manufacturers: Provide products from one manufacturer for each type or kind as applicable. Provide secondary materials as acceptable to manufacturers of primary materials.
B. Product Selection: Provide products selected or equal approved by Architect. Products submitted for substitution shall be submitted with complete documentation, and include construction costs of substitution including related work.
C. Substitutions: Request for substitution must be in writing. Conditions for substitution include:
1. An 'or equal' phrase in the specifications.
2. Specified material cannot be coordinated with other work.
3. Specified material is not acceptable to authorities having jurisdiction.
4. Substantial advantage is offered to the Owner in terms of cost, time, or other valuable consideration.
D. Substitution Requests: Substitutions shall be submitted prior to award of contract, unless otherwise acceptable. Approval of shop drawings, product data, or samples containing substitutions is not an approval of a substitution unless an item is clearly presented as a substitution at the time of submittal.

PART 2 PRODUCTS - Not Applicable To This Section
PART 3 EXECUTION - Not Applicable To This Section

END OF SECTION

SECTION 01 70 00
EXECUTION AND CLOSEOUT REQUIREMENTS

PART 1 GENERAL
1.1 SUMMARY
A. Substantial Completion: The following are prerequisites to substantial completion. Provide the following.
1. Punch list prepared by Contractor and subcontractors as applicable.
2. Supporting documentation.
3. Warranties.
4. Certifications.
5. Occupancy permit.
6. Start-up and testing of building systems.
7. Change over of locks.
8. Meter readings.
9. Commissioning documentation.
B. Final Acceptance: Provide the following prerequisites to final acceptance.
1. Final payment request with supporting affidavits.
2. Completed punch list.
C. As-Built Drawings: Provide a marked-up set of drawings including changes, which occurred during construction.
D. Project Closeout: Provide the following during project closeout.
1. Submission of record documents.
2. Submission of maintenance manuals.
3. Training and turnover to Owner's personnel.
4. Final cleaning and touch-up.
5. Removal of temporary facilities.

PART 2 PRODUCTS - Not Applicable To This Section
PART 3 EXECUTION
3.1 CUTTING AND PATCHING
A. Cutting and Patching: Provide cutting and patching work to properly complete the work of the project, complying with project requirements for:
1. Structural work.
2. Mechanical/electrical systems.
3. Visual requirements, including detailing and tolerances.
4. Operational and safety limitations.
5. Fire resistance ratings.
6. Inspection, preparation, and performance.
7. Cleaning.
B. Means and Methods: Do not cut and patch in a manner that would result in a failure of the work to perform as intended, decrease energy performance, increase maintenance, decrease operational life, or decrease safety performance.
C. Inspection: Inspect conditions prior to work to identify scope and type of work required. Protect adjacent work. Notify Owner of work requiring interruption to building services or Owner's operations.
D. Performance of Operations: Perform work with workmen skilled in the trades involved. Prepare sample area of each type of work for approval.
E. Cutting: Use cutting tools, not chopping tools. Make neat holes. Minimize damage to adjacent work. Inspect for concealed utilities and structure before cutting.
F. Patching: Make patches, seams, and joints durable and inconspicuous. Comply with tolerances for new work.
G. Cleaning: Clean work area and areas affected by cutting and patching operations.

END OF SECTION

SECTION 02 41 19
SELECTIVE DEMOLITION

PART 1 GENERAL
1.1 SUMMARY
A. Provide demolition activities
1.2 SUBMITTALS
A. Schedule: Submit for approval selective demolition schedule, including schedule and methods for capping utilities to be abandoned and maintaining existing utility service.
1.3 QUALITY ASSURANCE
A. Codes and Regulations: Comply with governing codes and regulations. Use experienced workers.
1.4 PROJECT CONDITIONS
A. Occupancy: Immediate areas of work will not be occupied during selective demolition. The public, including children, may occupy adjacent areas.
B. Existing Conditions: No responsibility for buildings and structures to be demolished will be assumed by the Owner

PART 2 PRODUCTS
2.1 DEMOLITION APPLICATIONS
A. Selective Site Demolition:
1. Application: Demolition of designated site improvements including paving, curbing, site walls, and utility structures.
2. Application: Demolition of below-grade foundations and site improvements to depth to avoid conflict with new construction or site work.
3. Application: Removal of hollow items or items which could collapse.
4. Application: Salvage of designated items.
5. Application: Protection of site work and adjacent structures.
6. Application: Disconnection, capping, and removal of utilities.
7. Application: Pollution control during building demolition, including noise control.
8. Application: Removal and legal disposal of materials.
9. Protection: Designated site improvements and adjacent construction.
10. Salvage: Designated items.
11. Utilities: Interruption, capping or removal as applicable.
B. Selective Building Demolition:
1. Application: Selective demolition of interior partitions, structures, and building components designated to be removed.
2. Application: Selective demolition of exterior facade, structures, and components designated to be removed.
3. Application: Protection of portions of building adjacent to or affected by selective demolition.
4. Application: Removal of abandoned utilities and wiring systems.
5. Application: Notification to Owner of schedule of shut-off of utilities which serve occupied spaces.
6. Application: Pollution control during selective demolition, including noise control.
7. Application: Removal and legal disposal of materials.
8. Protection: Designated site improvements and adjacent construction.
9. Salvage: Designated items.
10. Utilities: Interruption, capping or removal as applicable.

PART 3 EXECUTION
3.1 SELECTIVE DEMOLITION
A. Demolition Operations: Do not damage building elements and improvements indicated to remain. Items of salvage value, not included on schedule of salvage items to be returned to Owner, shall be removed from structure. Storage or sale of items at project site is prohibited.
B. Utilities: Locate, identify, disconnect, and seal or cap off utilities in buildings to be demolished.
C. Shoring and Bracing: Provide and maintain interior and exterior shoring and bracing.
D. Occupied Spaces: Do not close or obstruct streets, walks, drives or other occupied or used spaces or facilities without the written permission of the Owner and the authorities having jurisdiction. Provide alternate routes around closed or obstructed traffic ways if required by governing regulations. Protect facilities from damage that occupied or used facilities without the written permission of the Owner and the authorities having jurisdiction. If necessary, provide temporary utilities.
E. Operations: Cease operations if public safety or remaining structures are endangered. Perform temporary corrective measures until operations can be continued properly.
F. Security: Provide adequate protection against accidental trespassing. Secure project after work hours.
G. Restoration: Restore finishes of patched areas.

END OF SECTION

SECTION 03 30 00
CAST-IN-PLACE-CONCRETE

PART 1 GENERAL
1.1 SUMMARY
A. Provide cast-in-place concrete, reinforcing and accessories.
1.2 SUBMITTALS
A. Product Data: Submit manufacturer's product data and installation instructions for each material and product used.
B. Shop Drawings: Submit shop drawings indicating material characteristics, details of construction, connections, and relationship with adjacent construction.
1. Shop drawings shall be prepared and stamped by a qualified engineer licensed in the jurisdiction of the project.
C. Mix Design: Submit for approval mix design proposed for use.
1.3 QUALITY ASSURANCE
A. Comply with governing codes and regulations. Provide products of acceptable manufacturers, which have been in satisfactory use in similar service for three years. Use experienced installers. Deliver, handle, and store materials in accordance with manufacturer's instructions.
B. Testing: Employ an independent testing agency acceptable to Owner to design concrete mixes and to perform material evaluation tests. Provide 7 and 28 day cylinder tests. Comply with ASTM C 143, C 173, C 31 and C 39.
C. Standards:
1. ACI 301, Specifications for structural Concrete for Buildings.
2. ACI 318, Building Code Requirements for Reinforced Concrete, and CRSI Manual of Standard Practice.
D. Mock-Ups: Provide mock-up as required to demonstrate quality of workmanship.
E. Floor Flatness and Levelness Tolerances:
1. Subfloors Under Materials Such as Concrete Toppings, Ceramic Tile, and Sand Bed Terrazzo: ACI 302.1R and ASTM E 1155, floor flatness (Ff) of 15, floor levelness (Fl) of 13.
2. Subfloors Under Materials Such As Vinyl Tile, Epoxy Toppings, Paint, and Carpet: ACI 302.1R and ASTM E 1155, floor flatness (Ff) of 20, floor levelness (Fl) of 17.

PART 2 PRODUCTS
2.1 MATERIALS
A. Cast-In-Place Concrete:
1. Application: Columns and beams.
2. Application: Foundations and footings.
3. Application: Concrete on metal deck.
4. Application: Exterior site concrete slabs and pads.
5. Finish for Vertical Surfaces Exposed To View: Smooth rubbed finish.
6. Mechanically Applied Finish for Vertical Surfaces Exposed to View: Bushhammer finish.
7. Finish for Vertical Surfaces Not Exposed To View: As-cast form finish.
8. Finish for Horizontal Surfaces To Receive Concrete or Mortar Setting Bed: Scratch finish.
9. Finish for Surfaces to be Exposed to View or Covered with Resilient Flooring, Carpet Tile or Other Thin Finish System: Trowel finish.
10. Finish for Surfaces to Receive Thin-set Ceramic or Quarry Tile: Trowel and fine broom finish.
11. Finish for Exterior Concrete Platforms, Steps, Ramps and Sloped Walls: Non-slip broom finish.
12. Cast-In-Place Concrete Reinforcing and Accessories:
a. Concrete Design Mixes: ASTM C 94, 28 day compressive strength suitable for project requirements and as indicated on the drawings.
b. Formwork: Plywood or metal panel formwork sufficient for structural and visual requirements.
c. Reinforcing Bars: ASTM A 767, Class II, galvanized.
d. Steel Wire: ASTM A 82.
e. Steel Wire Fabric: ASTM A 497, welded, deformed.
f. Concrete Materials: ASTM C 150, Type I, Portland cement; potable water.
g. Concrete Admixtures: Containing less than 0.1 percent chloride ions.
h. Reglets: Galvanized sheet steel reglets, minimum 26 gauge (.018 inch).
i. Waterstops: Rubber, PVC or self expanding butyl/bentonite waterstops.
j. Vapor Retarder: ASTM D 4397 polyethylene sheet, 10 mils.
k. Liquid Membrane-Forming Curing Compound: ASTM C 309, Type 1, Class A.
l. Underlayment Compound: Free-flowing, self-leveling cement-based compound.
m. Bonding Compound: Polyvinyl acetate or acrylic base.
n. Epoxy Adhesive: ASTM C 881, two-component material.

PART 3 EXECUTION
3.1 INSTALLATION
A. Comply with ASTM C 94. Do not change mix design without approval. Calcium chloride admixtures are not permitted.
B. Chamfer exposed edges/corners to provide straight lines.
C. Tolerance: Plus 1/8" in 10" for grade, alignment, and straightness.
D. Construction Joints: Use keyways, continue reinforcement through joint.
E. Expansion Joints: For exterior work locate 30' o.c. at approved locations. Provide smooth dowels across joint which permit 1" horizontal movement and no vertical shear movement.
F. Isolation Joints: Provide between slabs and vertical elements such as columns and structural walls.
G. Control Joints: Provide sawn or tooled joints or sawn or tooled joints; depth equal to 1/4 slab thickness. Spacing as required and approved.
H. Wall Finishes: As-cast and patched for concealed work; rubbed smooth, filled and cement paste coated for exposed work.
I. Slab Finishes: Obtain sample approval before beginning work.
1. Scratch: For surfaces to receive mortar setting beds or cementitious flooring materials.
2. Trowel: Hard, smooth, uniform surface for areas to receive resilient flooring, carpet, or other thin finish material.
3. Broom: After trowel finishing, roughen surface by fine brooming perpendicular to traffic direction for exposed exterior walks, steps and ramps.
4. Non-Slip Aggregate: After trowel finishing, uniformly trowel 25-lbs./100 s. f. of damp non-slip aggregate into surface. Cure, then rub lightly to expose aggregate. Use for interior exposed concrete stairs and ramps.
5. Exposed Aggregate: Use chemical retarder or tamp aggregate into wet concrete and expose by brushing with water. Use where indicated.
6. Hardener Finish: For exposed interior concrete floors. Follow manufacturer's directions.
J. Cure and protect work. Report defective work in writing.

END OF SECTION

SECTION 05 50 00
METAL FABRICATIONS

PART 1 GENERAL
1.1 SUMMARY
A. Provide metal fabrications.
1.2 SUBMITTALS
A. Product Data: Submit manufacturer's product data and installation instructions for each material and product used.
B. Shop Drawings: Submit shop drawings indicating material characteristics, details of construction, connections, and relationship with adjacent construction.
1. Shop drawings shall be prepared and stamped by a qualified engineer licensed in the jurisdiction of the project.
C. Samples: Submit two representative samples of each material specified indicating visual characteristics and finish. Include range samples if variation of finish is anticipated.
1.3 QUALITY ASSURANCE
A. Comply with governing codes and regulations. Provide products of acceptable manufacturers, which have been in satisfactory use in similar service for three years. Use experienced installers. Deliver, handle, and store materials in accordance with manufacturer's instructions.

PART 2 PRODUCTS
2.1 MATERIALS
A. Metal Fabrication Applications:
1. Application: Rough hardware.
2. Application: Rooftop ladders.
3. Application: Miscellaneous framing and supports for overhead doors and grilles.
4. Application: Miscellaneous framing and supports for suspended toilet partitions.
5. Application: Steel framing and supports for countertops.
6. Application: Miscellaneous steel trim.
7. Application: Steel angle corner guards.
8. Application: Edgings.
9. Application: Structural steel door frames.
10. Application: Pipe guards.
11. Application: Pipe bollards.
12. Application: Security bars.
13. Application: Remodeling of existing metal fabrications.
B. Fasteners:
1. Bolts and Nuts: Hexagon head type, ASTM A 307, Grade A.
2. Lag Bolts: Square head, FS FF-B-561.
3. Machine Screws: Cadmium plated steel, FS FF-S-92.
4. Wood Screws: Flat head carbon steel, FS FF-S-111.
5. Plain Washers: Round carbon steel, FS FF-W-92.
6. Drilled-In Expansion Anchors: FS FF-S-325.
7. Toggle Bolts: Tumble-wing type, FS FF-B-588.
8. Lock Washers: Spring type carbon steel, FS FF-W-84.
9. Zinc-Coating: Fasteners in exterior assemblies or exterior walls.
C. Auxiliary Materials:
1. Nonshrink Metallic Grout: ASTM C 1107.
2. Nonshrink Nonmetallic Grout: ASTM C 1107.
3. Interior Anchoring Cement: Hydraulic expansion cement.
4. Exterior/Interior Anchoring Cement: Erosion-resistant hydraulic expansion cement.
5. Shop Primer: Fast curing, lead- and chromate-free, universal modified-alkyd primer complying with MPI#79, compatible with topcoats.
6. Zinc-Rich Primer: Complying with SSPC-Paint 20 or SSPC-Paint 29 and compatible with topcoat.
7. Galvanizing Repair Paint: SSPC - Paint 20.
8. Bituminous Paint: Asphalt mastic, SSPC - Paint 12.

PART 3 EXECUTION
3.1 INSTALLATION
A. Take field measurements prior to preparation of shop drawings and fabrication. Do not delay job; allow for cutting and fitting if field measurement not practical.
B. Form work true to line with sharp angles and edges. Weld continuously, grind flush and make smooth on exposed surfaces.
C. Install work plumb and level with hairline joints and ground flush welds.
D. Lintels: Provide sizes indicated with 8" bearing at each end.
E. Touch-up damaged coatings with shop primer and galvanize repair paint.
F. Paint items scheduled in accordance with painting section

END OF SECTION

SECTION 05 52 00
METAL RAILINGS

PART 1 GENERAL
1.1 SUMMARY
A. Provide pipe and tube handrails and railing systems.
1.2 SUBMITTALS
A. Product Data: Submit manufacturer's product data and installation instructions for each material and product used.
B. Shop Drawings: Submit shop drawings indicating material characteristics, details of construction, connections, and relationship with adjacent construction.
1.3 QUALITY ASSURANCE
A. Comply with governing codes and regulations. Provide products of acceptable manufacturers, which have been in satisfactory use in similar service for three years. Use experienced installers. Deliver, handle, and store materials in accordance with manufacturer's instructions.
B. Handrail and Railing Structural Performance: In accordance with applicable Building Code.

PART 2 PRODUCTS
2.1 MATERIALS
A. Metal Railings:
1. Application: Exterior metal railings.
2. Application: Interior metal railings.
3. Aluminum Pipe and Tube Railing Systems:
a. Extruded Bar and Tube: ASTM B 221, alloy 6063 T5/T52.
b. Extruded Structural Pipe and Tube: ASTM B 429, alloy 6063 T5/T52.
c. Drawn Seamless Tube: ASTM B 210, alloy 6063 T832.
d. Plate and Sheet: ASTM B 209, alloy 6061 T6.
e. Die and Hand Forgings: ASTM B 247, alloy 6061 T6.
f. Castings: ASTM B 26, alloy A356 T6.
4. Aluminum Finish: Clear anodized.
5. Stainless Steel Pipe and Tube Railing Systems:
a. Tubing: ASTM A 554, Grade TP 304 or TP 316.
b. Pipe: ASTM A 312, Grade TP 304 or TP 316.
c. Castings: ASTM A 743, Grade CF 8 or CF 20.
d. Plate: ASTM A 666, Type 304 or 316.
6. Stainless Steel Finish: 180 grit polished.
7. Steel Pipe and Tube Railing Systems:
a. Steel Pipe, Black Finish: ASTM A 53.
b. Steel Pipe, Galvanized Finish: ASTM A 53.
c. Steel Tubing: ASTM A 500 or A 501.
d. Steel Plates, Shapes and Bars: ASTM A 36.
e. Gray Iron Castings: ASTM A 48, Class 30.
f. Malleable Iron Castings: ASTM A 47, Grade 32510.
8. Steel Finish: Galvanized and shop primed.
9. Auxiliary Materials:
a. Nonshrink Nonmetallic Grout: CE CRD-C621.
b. Interior Anchoring Cement: Hydraulic expansion cement.
c. Exterior/Interior Anchoring Cement: Erosion-resistant hydraulic expansion cement.
d. Shop Primer: Fast-curing, lead- and chromate-free, universal modified-alkyd primer complying with MPI#79, compatible with topcoats.
e. Zinc-Rich Primer: Complying with SSPC-Paint 20 or SSPC-Paint 29 and compatible with topcoat.
f. Galvanizing Repair Paint: SSPC - Paint 20.
g. Bituminous Paint: Asphalt mastic, SSPC - Paint 12.

PART 3 EXECUTION
3.1 INSTALLATION
A. Take field measurements prior to fabrication. Form to required shapes and sizes with true, straight edges, lines and angles. Provide light-tight, hairline joints.
B. Install materials and systems in accordance with manufacturer's instructions and approved submittals. Install materials and systems in proper relation with adjacent construction. Coordinate with work of other sections.
C. Coordinate with work of other sections; provide inserts and templates as needed. Install work plumb and level with uniform appearance.
D. Restore damaged finishes and protect work.

END OF SECTION

SECTION 05 70 00
ORNAMENTAL METAL

PART 1 GENERAL
1.1 SUMMARY
A. Provide ornamental metalwork.
1.2 SUBMITTALS
A. Product Data: Submit manufacturer's product data and installation instructions for each material and product used.
B. Shop Drawings: Submit shop drawings indicating material characteristics, details of construction, connections, and relationship with adjacent construction.
C. Samples: Submit two representative samples of each material specified indicating visual characteristics and finish. Include range samples if variation of finish is anticipated.
1.3 QUALITY ASSURANCE
A. Comply with governing codes and regulations. Provide products of acceptable manufacturers, which have been in satisfactory use in similar service for three years. Use experienced installers. Deliver, handle, and store materials in accordance with manufacturer's instructions.
B. Mock-Ups: Provide mock-up as required to demonstrate quality of workmanship.

PART 2 PRODUCTS
2.1 MATERIALS
A. Ornamental Metalwork:
1. Application: Metal reveals at wood paneling.
2. Application: Closures and trim.
3. Application: Column covers.
4. Aluminum:
a. Extruded Bar and Tube: ASTM B 221, alloy 6063 T5/T52.
b. Extruded Structural Pipe and Tube: ASTM B 429, alloy 6063 T5/T52.
c. Drawn Seamless Tube: ASTM B 483, alloy 6063 T832.
d. Plate and Sheet: ASTM B 209, alloy 6061 T6.
e. Die and Hand Forgings: ASTM B 247, alloy 6061 T6.
f. Castings: ASTM B 26, alloy A356 T6.
5. Aluminum Finish: Clear anodized.
6. Auxiliary Materials:
a. Nonshrink Nonmetallic Grout: ASTM C 1107.
b. Welding Electrodes and Filler Metal: AWS specifications.
c. Fasteners, Anchors, and Inserts: Non-corrosive.
d. Universal Shop Primer: Fast-curing, lead- and chromate-free, universal modified-alkyd primer complying with MPI#79.
e. Zinc-Rich Primer: Comply with SSPC-Paint 20 or SSPC-Paint 29 and compatible with topcoat.
f. Galvanizing Repair Paint: SSPC - Paint 20.
g. Bituminous Paint: Asphalt mastic, SSPC - Paint 12.

PART 3 EXECUTION
3.1 INSTALLATION
A. Take field measurements prior to fabrication. Form to required shapes and sizes with true, straight edges, lines and angles. Provide light-tight, hairline joints.
B. Install materials and systems in accordance with manufacturer's instructions and approved submittals. Install materials and systems in proper relation with adjacent construction. Coordinate with work of other sections.
C. Coordinate with work of other sections; provide inserts and templates as needed. Install work plumb and level with uniform appearance.
D. Restore damaged finishes and protect work.

END OF SECTION

SECTION 06 10 00
ROUGH CARPENTRY

PART 1 GENERAL
1.1 SUMMARY
A. Provide rough carpentry.
1.2 SUBMITTALS
A. Product Data: Submit manufacturer's product data and installation instructions for each material and product used.
1.3 QUALITY ASSURANCE
A. Comply with governing codes and regulations. Provide products of acceptable manufacturers, which have been in satisfactory use in similar service for three years. Use experienced installers. Deliver, handle, and store materials in accordance with manufacturer's instructions.
B. Lumber Standards and Grade Stamps: DOC PS 20, American Softwood Lumber Standard and inspection agency grade stamps.
C. Construction Panel Standards: DOC PS 1, U.S. Product Standard for Construction and Industrial Plywood; APA PRP-108.
D. Wood Framing Standards: NFPA House Framing Manual.
1. Exterior Wall Framing: 2 inch by 6-inch nominal (38 mm by 140 mm actual) studs, 24 inches (61 cm) on center.
2. Exterior Wall Framing: 2 inch by 4-inch nominal (38 mm by 89 mm actual) studs, 16 inches (40 cm) on center.
3. Interior Wall Framing: 2 inch by 4-inch (38 mm by 89 mm actual) studs, 16 inches (40 cm) on center.
E. Preservative Treatment: AWPA C2 for lumber and AWPA C9 for plywood; waterborne pressure treatment. Provide for wood in contact with soil, concrete, masonry, roofing, flashing, dampproofing and waterproofing.
F. Fire-Retardant Treatment: AWPA C20 for lumber and AWPA C27 for plywood; noncorrosive type. Provide at building interior where required by code.

PART 2 PRODUCTS
2.1 MATERIALS
A. Rough Carpentry Applications:
1. Application: Framing with dimension lumber.
2. Application: Framing with engineered wood products.
3. Application: Rooftop equipment bases and support curbs.
4. Application: Wood grounds, nailers, and blocking.
5. Application: Wood furring.
6. Application: Backing panels.
7. Application: Wood sheathing.
8. Application: Underlayment.
9. Dimension Lumber:
a. Light Framing: Stud, No. 3 or Standard grade.
b. Structural Framing: No. 1 grade.
c. Species: Any species of grade indicated.
d. Exposed Framing: Appearance grade.
10. Boards:
a. Exposed Boards: 15 percent moisture content.
b. Concealed Boards: 19 percent moisture content.
11. Miscellaneous Lumber:
a. Moisture Content: 19 percent.
b. Grade: Standard grade light framing.
12. Engineered Wood Products:
a. Laminated-Veneer Lumber: A composite of wood veneers with grain primarily parallel to member lengths, manufactured with an exterior-type adhesive complying with ASTM D 2559.
b. Parallel-Strand Lumber: A composite of wood strand elements with grain primarily parallel to member lengths, manufactured with an exterior-type adhesive complying with ASTM D 2559.
c. Prefabricated Wood I Joists: Stress-graded lumber bonded to APA performance rated panel with exterior type adhesive; design stresses for use intended.
d. Composite Joists and Headers: Laminated lumber veneers; design stresses for use intended.
13. Construction Panels:
a. Combination Subfloor-Underlayment: Exposure 1, Structural I, Underlayment.
b. Oriented-Strand-Board, Combination Subfloor-Underlayment: Exposure 1.
c. Plywood Subflooring: Exposure 1, Structural I.
d. Plywood Wall Sheathing: Exposure 1, Structural I sheathing.
e. Oriented-Strand-Board Wall Sheathing: Exposure 1, Structural sheathing.
f. Plywood Roof Sheathing: Exposure 1, Structural I. Sheathing.
g. Oriented-Strand-Board Roof Sheathing: Exposure 1, Structural I sheathing.
h. Telephone and Electrical Equipment Backing Panels: DOC PS 1, Exposure 1, C-D Plugged, fire-retardant treated.
i. Plywood Underlayment for Resilient Flooring: DOC PS 1, Exterior A-C with fully sanded face.
j. Plywood Underlayment for Ceramic Tile: DOC PS 1, Exterior, C-C Plugged.
k. Plywood Underlayment for Carpet: DOC PS 1, Interior Underlayment.
14. Fibrous Felted Boards:
a. Hardboard Underlayment: AHA A135.4, Class 4 (Service), Surface S1S; with back side sanded.
b. Fiberboard Wall Sheathing: AHA A194.1, Type IV, Class 1 (regular density).
15. Particleboard:
a. Underlayment: ANSI A 208.1, Grade PBU, grade marked.
16. Building Paper:
a. Material: Asphalt-saturated organic felt, ASTM D 226, Type I, No. 15 felt, unperforated.
17. Building Wrap:
a. Material: Air-retarder sheeting made from polyolefins; cross-laminated films, woven strands, or spun-bonded fibers; coated or uncoated; with or without perforations; ASTM E 1677, Type I.
18. Sill Sealer Gaskets:
a. Material: Glass fiber strip resilient insulation.
19. Framing Anchors and Fasteners:
a. Material: Non-corrosive, suitable for load and exposure. Drywall screws are not acceptable.

PART 3 EXECUTION
3.1 INSTALLATION
A. Securely attach rough carpentry work to substrate by anchoring and fastening as indicated.
B. Plywood: Comply with applicable recommendations contained in APA Form No. E30K, "APA Design/Construction Guide: Residential & Commercial"
C. Provide nailers, blocking and grounds where required. Set work plumb, level and accurately cut.
D. Install materials and systems in accordance with manufacturer's instructions and approved submittals. Install materials and systems in proper relation with adjacent construction. Coordinate with other work.
E. Comply with manufacturer's requirements for cutting, handling, fastening and working treated materials.
F. Restore damaged components. Protect work from damage.

END OF SECTION

SECTION 06 40 23
INTERIOR ARCHITECTURAL WOODWORK

PART 1 GENERAL
1.1 SUMMARY
A. Provide interior finish carpentry, architectural woodwork and countertops.
1.2 SUBMITTALS
A. Product Data: Submit manufacturer's product data and installation instructions for each material and product used.
B. Shop Drawings: Submit shop drawings indicating material characteristics, details of construction, connections, and relationship with adjacent construction.
C. Samples: Submit two representative samples of each material specified indicating visual characteristics and finish. Include range samples if variation of finish is anticipated.
1.3 QUALITY ASSURANCE
A. Comply with governing codes and regulations. Provide products of acceptable manufacturers, which have been in satisfactory use in similar service for three years. Use experienced installers. Deliver, handle, and store materials in accordance with manufacturer's instructions.
B. Standards: Architectural Woodwork Institute (AWI) 'Architectural Woodwork Standards.'
C. Preservative Treatment: Nonpressure method, exterior type, AWPA N1
D. Fire-Retardant Treatment:
1. Lumber: AWPA C20, non-corrosive type.
2. Plywood: AWPA C27, non-corrosive type.
3. Particleboard: ASTM E 84, flame spread 20 or less.
E. Wood Products: Comply with the following:
1. Hardboard: AHA A135.4.
2. Medium-Density Fiberboard: ANSI A208.2, Grade MD-Exterior Glue.
3. Particleboard: ANSI A208.1, Grade M-2-Exterior Glue.
4. Softwood Plywood: DOC PS 1, Medium Density Overlay.
5. Hardwood Plywood and Face Veneers: HPVA HP-1.
F. Mock-Ups: Provide mock-up as required to demonstrate quality of workmanship of each type of cabinet carpentry.

PART 2 PRODUCTS
2.1 MATERIALS
A. Interior Standing and Running Trim and Rails:
1. Species for Opaque Finish: Any closed-grain hardwood.
2. Grade: Premium.
3. Factory Finish: Transparent finish.
4. Factory Finish: Opaque finish.
5. Site Finish: Transparent finish.
6. Site Finish: Opaque finish.
B. Interior Plastic Laminate Clad Casework:
1. Laminate: High pressure decorative laminate, NEMA LD-3.
2. Grade: Premium.
3. Frame Fabrication: Frameless.
C. Interior Casework Hardware and Auxiliary Materials:
1. Hardware Standard: ANSI/BHMA A156.9.
2. Hardware Finish and Base Metal: Satin stainless steel.
D. Interior Plastic Laminate Clad Countertops:
1. Laminate: High pressure decorative laminate, NEMA LD-3.
2. Grade: Premium.
3. Grain Direction: Parallel to cabinet fronts.
4. Edge: Laminate.
E. Interior Solid Surfacing Material Countertops:
1. Type: Homogeneous solid sheets ANSI Z124.3, for Type 5 or Type 6, without a precoated finish.
2. Grade: Premium.
3. Edge: Decorative.

PART 3 EXECUTION
3.1 INSTALLATION
A. Provide work to sizes, shapes, and profiles indicated. Install work to comply with quality standards referenced. Back prime work and install plumb, level and straight with tight joints; scribe work to fit.
B. Quality Standard: Install woodwork to comply with AWI standards for the same grade specified for type of woodwork involved.
C. Install materials and systems in accordance with manufacturer's instructions and approved submittals. Install materials and systems in proper relation with adjacent construction. Coordinate with work of other sections.
D. Comply with manufacturer's requirements for cutting, handling, fastening and working treated materials.
E. Repair minor damage, clean and protect.

END OF SECTION

SECTION 07 21 00
THERMAL INSULATION

PART 1 GENERAL
1.1 SUMMARY
A. Provide thermal insulation and vapor retarders.
1.2 SUBMITTALS
A. Product Data: Submit manufacturer's product data and installation instructions for each material and product used.
B. Submit for approval test reports.
1.3 QUALITY ASSURANCE
A. Comply with governing codes and regulations. Provide products of acceptable manufacturers, which have been in satisfactory use in similar service for three years. Use experienced installers. Deliver, handle, and store materials in accordance with manufacturer's instructions.

PART 2 PRODUCTS
2.1 MATERIALS
A. Blanket/Batt Insulation:
1. Application: Thermal insulation in studs in exterior walls.
2. Application: Thermal insulation at underside of roofs, over heated spaces and soffits.
3. Type: Foil-faced mineral fiber.
a. Standard: ASTM C 665, Type III (foil-scrim-kraft vapor-retarder membrane).
b. Accessories: Fasteners and tapes.
B. Roof and Deck Insulation:
1. Application: Exterior roofs and decks.
2. Type: Polyisocyanurate.
C. Radiant Barriers:
1. Application: Exterior walls.
2. Interior Radiation Control Coating: Surface emittance value of 0.1 or less per ASTM C 1371.
3. Sheet Radiant Barriers: ASTM C 1313.

PART 3 EXECUTION
3.1 INSTALLATION
A. Install materials and systems in accordance with manufacturer's instructions and approved submittals. Install materials and systems in proper relation with adjacent construction. Coordinate with work of other sections. Provide full thickness in one layer over entire area, tightly fitting around penetrations.
B. Pour loose insulation into cavities indicated; provide uniform coverage at correct density and thickness.
C. Install vapor retarder over entire area of inside face of exterior walls and elsewhere as indicated. Seal all seams and around perimeter and penetrations with duct tape to form a continuous vapor retarder free of holes.
D. Protect installed insulation and vapor retarder.

END OF SECTION

SECTION 07 84 00
FIRESTOPPING

PART 1 GENERAL
1.1 SUMMARY
A. Provide firestopping.
1.2 SUBMITTALS
A. Product Data: Submit manufacturer's product data and installation instructions for each material and product used.
B. Submit for approval test reports.
1.3 QUALITY ASSURANCE
A. Comply with governing codes and regulations. Provide products of acceptable manufacturers, which have been in satisfactory use in similar service for three years. Use experienced installers. Deliver, handle, and store materials in accordance with manufacturer's instructions.
B. Fire Performance: UL 2079, ASTM E 814, and local regulations.

PART 2 PRODUCTS
2.1 MATERIALS
A. Firestopping Systems:
1. Manufacturers: 3M Fire Protection Products
2. Applications as Applicable to Assembly: Through-penetrations, fire-resistive joints, perimeter fire containment, smoke seals.
3. Types as Applicable to Assembly: Endothermic and intumescent sealants, pillows, putty and wrap strips.

PART 3 EXECUTION
3.1 INSTALLATION
A. Review extent of work with authorities having jurisdiction and obtain approval of installation thicknesses and methods.
B. Sequence work to avoid need for removal of firestopping by work of other trades.
C. Comply with manufacturers' instructions and recommendations. Securely anchor insulation with safing clips. Install firestopping without gaps or voids.
D. Protect, inspect and repair work until final acceptance.

END OF SECTION

SECTION 08 11 13
HOLLOW METAL DOORS AND FRAMES

PART 1 GENERAL
1.1 SUMMARY
A. Provide steel doors and frames.
1.2 SUBMITTALS
A. Product Data: Submit manufacturer's product data and installation instructions for each material and product used.
B. Shop Drawings: Submit shop drawings indicating material characteristics, details of construction, connections, and relationship with adjacent construction.
1.3 QUALITY ASSURANCE
A. Comply with governing codes and regulations. Provide products of acceptable manufacturers, which have been in satisfactory use in similar service for three years. Use experienced installers. Deliver, handle, and store materials in accordance with manufacturer's instructions.
B. Standards: ANSI/SDI-100, Recommended Specifications for Standard Steel Doors and Frames.
C. Performance Standards:
1. Fire-Rated Assemblies: NFPA 80, and acceptable testing agency listing.
2. Thermal-Rated Assemblies at Exterior: ASTM C 236 or ASTM C 976.
3. Sound-Rated Assemblies at Mechanical Rooms: ASTM E 1408, and ASTM E 413.

PART 2 PRODUCTS
2.1 MATERIALS
A. Interior Steel Doors:
1. Material: Minimum 18 gauge steel sheet.
2. Thickness: 1-3/4 inches.
3. Finish: Factory primed and field painted.
4. Finish: Factory finished.
5. Accessories:
a. Sightproof stationary louvers.
b. Glazing stops.
c. Silencers.
B. Interior Steel Frames:
1. Material: Minimum 16 gauge steel sheet.
2. Corners: Mitered or coped.
3. Type: Welded.
4. Type: Knockdown.
5. Type: Drywall slip-on.
6. Finish: Factory primed and field painted.
7. Finish: Factory finished.
C. Exterior Steel Doors:
1. Material: Minimum 16 gauge galvanized steel sheet.
2. Door Thickness: 1-3/4 inches, thermally insulated.
3. Finish: Factory primed and field painted.
4. Finish: Factory finished.
5. Accessories:
a. Sightproof stationary louvers.
b. Glazing stops.
c. Silencers.
D. Exterior Steel Frames:
1. Material: Minimum 14 gauge galvanized steel sheet.
2. Corners: Mitered or coped.
3. Type: Welded.
4. Type: Knockdown.
5. Finish: Factory primed and field painted.
6. Finish: Factory finished.
E. Interior Preassembled Steel Doors and Frames:
1. Material: Minimum 22 gauge steel sheet.
2. Door Thickness: 1-3/4 inches.
3. Door Faces: Flush.
4. Door Faces: Embossed panels.
5. Finish: Factory finished.
F. Exterior Preassembled Steel Doors and Frames:
1. Material: Minimum 22 gauge galvanized steel sheet.
2. Door Thickness: 1-3/4 inches, thermally insulated.
3. Type: Two-piece adjustable split jamb.
4. Finish: Factory finished.

PART 3 EXECUTION
3.1 INSTALLATION
A. Fabricate work to be rigid, neat and free from seams, defects, dents, warp, buckle, and exposed fasteners. Install doors and frames in compliance with SDI-100, NFPA 80, and requirements of authorities having jurisdiction.
B. Provide thermally improved doors with maximum U-value of 0.24 BTU/hr./sq. ft. degree F (ASTM C 236) for all exterior doors and elsewhere as noted.
C. Provide acoustically improved doors with minimum STC of 33 (ASTM E 90 and ASTM E 413) where indicated.
D. Hardware: Prepare doors and frames to receive hardware on final schedule. Provide for 3 silencers on single doorframes; 2 on double doorframes.
E. Shop Finish: Clean, treat and prime paint all work with rust-inhibiting primer comparable with finish paint specified in Division 9 section. Provide asphalt emulsion sound deadening coating on concealed frame interiors.
F. Touch-up damaged coatings with field primer.

END OF SECTION

SECTION 08 14 00
FLUSH WOOD DOORS

PART 1 GENERAL
1.1 SUMMARY
A. Provide flush wood doors.
1.2 SUBMITTALS
A. Product Data: Submit manufacturer's product data and installation instructions for each material and product used.
B. Samples: Submit two representative samples of each material specified indicating visual characteristics and finish. Include range samples if variation of finish is anticipated.
C. Warranty: Submit manufacturers standard warranty. Include labor and materials to repair or replace defective materials.
1. Solid-Core Exterior Doors: 5 years.
2. Solid-Core Interior Doors: Life of installation.
3. Hollow-Core Interior Doors: 2 years.
1.3 QUALITY ASSURANCE
A. Comply with governing codes and regulations. Provide products of acceptable manufacturers, which have been in satisfactory use in similar service for three years. Use experienced installers. Deliver, handle, and store materials in accordance with manufacturer's instructions.
B. Quality Standards: [NWWDA I.S.1-A, 'Architectural Wood Flush Doors.'] [AWI's 'Architectural Woodwork Standards.']
C. Fire Rated Wood Doors: Meet NFPA 80 requirements.

PART 2 PRODUCTS
2.1 MATERIALS
A. Interior Flush Wood Doors:
1. Type: Solid core.
2. Thickness: 1-3/4 inches thick.
3. Grade: Premium.
4. Frames: Wood.
5. Face: As selected.
6. Finish: As Selected.
7. Finish Application: As Selected.
8. Auxiliary Materials:
a. Glazed panels.
b. Transom panels.
c. Louvered panels.
B. Exterior Flush Wood Doors:
1. Type: Solid core.
2. Thickness: 1-3/4 inches thick.
3. Grade: Premium.
4. Frames: Wood.
5. Face: As selected.
6. Finish: As selected.
7. Finish Application: As selected.
8. Auxiliary Materials:
a. Glazed panels.
b. Transom panels.

PART 3 EXECUTION
3.1 INSTALLATION
A. Comply with NWMA I.S. 1A and specified quality standard.
B. Prefit doors to frames. Premachine doors for hardware listed on final schedules. Factory bevel doors.
C. Install doors with not more than 1/8 inch clearance at top and sides, 1/4 inch at bottom. Comply with NFPA 80 for rated assemblies.
D. Adjust, clean, and protect.

END OF SECTION

SECTION 08 31 00
ACCESS DOORS AND PANELS

PART 1 GENERAL
1.1 SUMMARY
A. Provide access doors and panels for walls and ceilings.
1.2 SUBMITTALS
A. Product Data: Submit manufacturer's product data and installation instructions for each material and product used.
1.3 QUALITY ASSURANCE
A. Comply with governing codes and regulations. Provide products of acceptable manufacturers, which have been in satisfactory use in similar service for three years. Use experienced installers. Deliver, handle, and store materials in accordance with manufacturer's instructions.

PART 2 PRODUCTS
2.1 MATERIALS
A. Access Doors:
1. Frames: 16-gauge (.0598 inch) stainless steel, AISI No. 4 satin finish with flange.
2. Doors: 14-gauge (.0625 inch) stainless steel, AISI No. 4 satin finish.
3. Door Type: Flush panel.
4. Locking Devices: Cylinder locks.
5. Fire Rating: NFPA 80.

PART 3 EXECUTION
3.1 INSTALLATION
A. Install materials and systems in accordance with manufacturer's instructions and approved submittals. Install materials and systems in proper relation with adjacent construction and with uniform appearance. Coordinate with work of other sections. Install assemblies complete with all hardware, anchors, inserts, supports and accessories. Test and adjust operation.

CO AR

CO-AR DESIGN, INC.
680 Brea Canyon Rd., Ste. 178
Diamond Bar, CA 91789

Office: 909-598-0186
http://www.coardesign.com

Dennis J. Lee, Architect
dennisl@coardesign.com

THESE DRAWINGS ARE THE PROPERTY OF THE ARCHITECT. THE DESIGNS SHOWN AND DESCRIBED HEREIN INCLUDING ALL TECHNICAL DRAWINGS ARE PROPRIETARY AND CANNOT BE COPIED, DUPLICATED OR COMMERCIALLY EXPLOITED, IN WHOLE OR IN PART. THE DRAWINGS AND SPECIFICATIONS SHALL NOT BE USED BY THE OWNER ON OTHER PROJECTS, FOR ADDITIONS TO THIS PROJECT, OR FOR COMPLETION OF THIS PROJECT BY OTHERS. THE OWNER AGREES TO HOLD HARMLESS, INDEMNIFY AND DEFEND THE ARCHITECT AGAINST ALL DAMAGES, CLAIMS AND LOSSES, INCLUDING DEFENSE COSTS, ARISING OUT OF ANY REUSE OF THE PLANS AND SPECIFICATIONS WITHOUT THE WRITTEN AUTHORIZATION OF THE ARCHITECT OF RECORD.

COPYRIGHT © 2022 CO-AR DESIGN, INC., ALL RIGHTS RESERVED.

SEAL

LICENSED ARCHITECT
DENNIS JOON HO LEE
C-29168
4/30/2023
RENEWAL DATE
STATE OF CALIFORNIA

NOTES

Alameda County
Dept. of Environmental Health
Approved By: T. Tran

PROJECT
SALTALK FREMONT KITCHEN TENANT IMPROVEMENT

42550 ALBRAE ST.,
FREMONT, CA 94538

CLIENT
SALTALK, INC.
3334 VICTOR CT.,
SANTA CLARA, CA 95054

SUBMITTALS/REVISIONS

4	1ST PLANNING SUBMITTAL	2/10/22
5	SD	3/7/22
6	1ST HEALTH SUBMITTAL	4/7/22
7	1ST BLDG SUBMITTAL	4/11/22
8	2ND BLDG SUBMITTAL	7/29/22
9	3RD USD SUBMITTAL	9/12/22
10	2ND HEALTH SUBMITTAL	xx/xx/22
11	3RD BLDG SUBMITTAL	xx/xx/22

PROJECT NO.	202201
SCALE	AS SHOWN
DATE	10/4/2022
DRAWN BY	ED / FW
CHECKED BY	DL

SHEET TITLE
DESIGN SPECIFICATIONS

SHEET NO.
A-0.4

B. Restore damaged finishes and test for proper operation. Clean and protect work from damage.

END OF SECTION

SECTION 08 38 00 TRAFFIC DOORS

PART 1 GENERAL
1.1 SUMMARY
A. Provide traffic doors.
1.2 SUBMITTALS
A. Product Data: Submit manufacturer's product data and installation instructions for each material and product used.
B. Shop Drawings: Submit shop drawings indicating material characteristics, details of construction, connections, and relationship with adjacent construction.
1.3 QUALITY ASSURANCE
A. Comply with governing codes and regulations. Provide products of acceptable manufacturers, which have been in satisfactory use in similar service for three years. Use experienced installers. Deliver, handle, and store materials in accordance with manufacturer's instructions.
PART 2 PRODUCTS
2.1 MATERIALS
A. Traffic Doors:
1. Manufacturers: Eliason Corp.
2. Type: Single acting.
3. Type: Double acting.
4. Type: Curtain.
5. Panels: Reinforced flexible plastic with overlap at leading edge, stainless steel hinges, impact plates.
6. Panels: Anodized aluminum with formed cover, impact plates.
7. Panels: Polished stainless steel over 3/8 inch plywood, impact plates.
8. Panels: ABS plastic, reinforced, finished with rigid fiberglass, impact plates.
9. Panels: Plywood core with plastic laminate facing, impact plates.
10. Panels: Aluminum core with ABS facings, insulated.
11. Frames: Suitable for service.
PART 3 EXECUTION
3.1 INSTALLATION
A. Take field measurements prior to fabrication, where possible. Form to required shapes and sizes with true, straight edges, lines and angles.
B. Install materials and systems in accordance with manufacturer's instructions and approved submittals. Install materials and systems in proper relation with adjacent construction. Coordinate with work of other sections.
C. Test for proper operation. Restore damaged finishes and protect work.

END OF SECTION

SECTION 08 41 13 ENTRANCES AND STOREFRONTS

PART 1 GENERAL
1.1 SUMMARY
A. Provide entrances and storefront.
1.2 SUBMITTALS
A. Product Data: Submit manufacturer's product data and installation instructions for each material and product used.
B. Shop Drawings: Submit shop drawings indicating material characteristics, details of construction, connections, and relationship with adjacent construction.
C. Warranty: Submit manufacturer's standard warranty. Include labor and materials to repair or replace defective materials.
1. Warranty Period: 5 years.
D. Operation and Maintenance Data: Submit manufacturer's operation and maintenance data, including operating instructions, list of spare parts and maintenance schedule.
1.3 QUALITY ASSURANCE
A. Comply with governing codes and regulations. Provide products of acceptable manufacturers, which have been in satisfactory use in similar service for three years. Use experienced installers. Deliver, handle, and store materials in accordance with manufacturer's instructions.
PART 2 PRODUCTS
2.1 MATERIALS
A. Aluminum Entrances and Storefront:
1. Aluminum Members: ASTM B 209, ASTM B 221, ASTM B 429.
2. Steel Reinforcement: ASTM A 36, ASTM A 1008, and ASTM A 1011.
3. Door Style: Narrow stile and rail doors.
4. Storefront Style: Aluminum framed, butt glazed vertical joints.
5. Aluminum Finish: Clear anodized.
6. Auxiliary Materials:
a. Aluminum infill panels.
b. Push/pulls, doorstops, overhead holders, and deadlocks.
c. Weatherstripping and thresholds.
d. Exit devices.
e. Electric-strike release.
PART 3 EXECUTION
3.1 INSTALLATION
A. Take field measurements before fabrication where possible; do not delay job progress.
B. Install materials and systems in accordance with manufacturer's instructions and approved submittals. Install materials and systems in proper relation with adjacent construction and with uniform appearance. Coordinate with work of other sections.
C. Anchor securely in place; install plumb, level and in true alignment. Isolate dissimilar materials to prevent corrosion.
D. Coordinate with glass and glazing work; install hardware and adjust for smooth, proper operation.
E. Clean and protect completed system; repair damage.

END OF SECTION

SECTION 08 51 13 ALUMINUM WINDOWS

PART 1 GENERAL
1.1 SUMMARY
A. Provide aluminum windows.
1.2 SUBMITTALS
A. Product Data: Submit manufacturer's product data and installation instructions for each material and product used.
B. Shop Drawings: Submit shop drawings indicating material characteristics, details of construction, connections, and relationship with adjacent construction.
C. Samples: Submit two representative samples of each material specified indicating visual characteristics and finish. Include range samples if variation of finish is anticipated.
D. Warranty: Submit manufacturer's standard warranty. Include labor and materials to repair or replace defective materials.
1. Warranty Period: 5 years.
E. Maintenance Data: Submit manufacturer's maintenance data, including maintenance schedule.
1.3 QUALITY ASSURANCE
A. Comply with governing codes and regulations. Provide products of acceptable manufacturers, which have been in satisfactory use in similar service for three years. Use experienced installers. Deliver, handle, and store materials in accordance with manufacturer's instructions.
B. Mock-Ups: Provide mock-up as required to demonstrate quality of workmanship.
C. Performance: Comply with AAMA/NWWDA 101/I.S.2 for grade of window required.
PART 2 PRODUCTS
2.1 MATERIALS
A. Aluminum Windows:
1. Construction: Thermal-break type.
2. Aluminum Window Members: Aluminum extrusions.
3. Anchors, Clips, and Window Accessories: Aluminum, nonmagnetic stainless steel, or galvanized steel.
4. Window Operation: See drawings.
5. Grade: Commercial.
a. Standard: AAMA/NWWDA 101/I.S. 2, Grade 40.
6. Glazing: See drawings.
7. Glazing Color: See drawings.
8. Aluminum Finish: Clear anodized.
9. Auxiliary Materials:
a. Ventilator opening limit device.
b. Window cleaner's bolts.
c. Operating hardware.
d. Insect screening.
e. Integral venetian blinds.
f. Nonglazed vent bar.
g. Exterior louver units.
h. Group operating system, manual operation.
i. Group operating system, power driven operation.
PART 3 EXECUTION
3.1 INSTALLATION
A. Fabricate windows to conform to AAMA standards and accept glass specified.
B. Install materials and systems in accordance with manufacturer's instructions and approved submittals. Install materials and systems in proper relation with adjacent construction and with uniform appearance. Coordinate with work of other sections.
C. Operation: Provide locking units with manual operation; provide pole for out of reach hardware.
D. Restore damaged finishes and test for proper operation. Clean and protect work from damage.

END OF SECTION

SECTION 08 71 00 DOOR HARDWARE

PART 1 GENERAL
1.1 SUMMARY
A. Provide door hardware.
1.2 SUBMITTALS
A. Product Data: Submit manufacturer's product data and installation instructions for each material and product used.
B. Samples: Submit two representative samples of each material specified indicating visual characteristics and finish. Include range samples if variation of finish is anticipated.
C. Submit for approval hardware schedule proposed for use based on Owner's requirements.
1.3 QUALITY ASSURANCE
A. Comply with governing codes and regulations. Provide products of acceptable manufacturers, which have been in satisfactory use in similar service for three years. Use experienced installers. Deliver, handle, and store materials in accordance with manufacturer's instructions.
B. Hardware for Fire-Rated Openings: NFPA 80, and local requirements.
C. Materials and Application: ANSI A156 series standards.
PART 2 PRODUCTS
2.1 MATERIALS
A. Door Hardware:
1. Quality Level: Commercial.
2. Locksets and Latchsets: Bored cylindrical type.
3. Lock Cylinders: Integral.
4. Keying: Owner's requirements.
5. Hinges and Butts: Full-mortise type at interior, with nonremovable pins at exterior doors.
6. Closers, Door Control, and Exit Devices: High frequency.
7. Pivots: Offset or center-hung type.
8. Push/Pull Units: Through-bolted type.
9. Hardware Finishes: Satin chrome finish on exposed surfaces.
10. Auxiliary Materials:
a. Door Trim Units: Kickplates, edge trim, viewers, knockers, and mail drops. and related trim.
b. Stops and overhead door holders.
c. Interior sliding door hardware.
d. Interior bifold door hardware.
e. Interior pocket door hardware.
f. Soundstripping.
g. Weatherstripping and thresholds.
h. Electromagnetic hold-open devices.
i. Card-operated opening devices.
j. Knox box for fire emergency keys.
PART 3 EXECUTION
3.1 INSTALLATION
A. Follow guidelines of DHI 'Recommended Locations for Builder's Hardware and hardware manufacturers' instructions.
B. Install materials and systems in accordance with manufacturer's instructions and approved submittals. Install materials and systems in proper relation with adjacent construction and with uniform appearance. Coordinate with work of other sections.
C. Adjust operation, clean and protect.

END OF SECTION

SECTION 08 80 00 GLAZING

PART 1 GENERAL
1.1 SUMMARY
A. Provide glass and glazing.
1.2 SUBMITTALS
A. Product Data: Submit manufacturer's product data and installation instructions for each material and product used.
B. Shop Drawings: Submit shop drawings indicating material characteristics, details of construction, connections, and relationship with adjacent construction.
C. Samples: Submit two representative samples of each material specified indicating visual characteristics and finish. Include range samples if variation of finish is anticipated.
D. Warranty: Submit manufacturer's standard warranty. Include labor and materials to repair or replace defective materials.
1. Laminated Glass: Manufacturer's 5-year warranty.
2. Coated Glass: Manufacturer's 10-year warranty.
3. Insulating Glass: Manufacturer's 10-year warranty.
4. Mirror Glass: Manufacturer's 5-year warranty.
1.3 QUALITY ASSURANCE
A. Comply with governing codes and regulations. Provide products of acceptable manufacturers, which have been in satisfactory use in similar service for three years. Use experienced installers. Deliver, handle, and store materials in accordance with manufacturer's instructions.
B. Glazing for Fire-Rated Assemblies: Glazing for assemblies that comply with NFPA 80
C. Safety Glazing Products: Comply with testing requirements in 16 CFR 1201 and, for wired glass, ANSI Z97.1.
D. Glazing Publications:
1. GANA Publications: GANA's 'Glazing Manual.' and 'Laminated Glass Design Guide.'
2. AAMA Publications: AAMA GDSG-1, 'Glass Design for Sloped Glazing,' and AAMA TIR-A7, 'Sloped Glazing Guidelines.'
3. IGMA Publication for Sloped Glazing: IGMA TB-3001, 'Sloped Glazing Guidelines.'
4. IGMA Publication for Insulating Glass: SIGMA TM-3000, 'Glazing Guidelines for Sealed Insulating Glass Units.'
E. Mock-Ups: Provide mock-up as required to demonstrate quality of workmanship.
1. Each type of glazing.
PART 2 PRODUCTS
2.1 MATERIALS
A. Glass and Glazing:
1. Type: See drawings, tempered at locations as required by Code.
2. Auxiliary Materials:.
a. Compression gaskets.
b. Elastomeric glazing sealants.
c. Preformed glazing tapes.
d. Glazing gaskets.
e. Setting blocks, spacers, and compressible filler rods.
f. Mirror adhesive, top and bottom angles and clips.
PART 3 EXECUTION
3.1 INSTALLATION
A. Inspect framing and report unsatisfactory conditions in writing.
B. Comply with GANA "Glazing Manual" and manufacturers instructions and recommendations. Use manufacturer's recommended spacers, blocks, primers, sealers, gaskets and accessories.
C. Install glass with uniformity of pattern, draw, bow and roller marks.
D. Install sealants to provide complete wetting and bond and to create a substantial wash away from glass.
E. Set mirrors on stainless steel clips and adhere to wall with mirror adhesive.
F. Remove and replace damaged glass and glazing. Wash, polish and protect all glass supplied under this section.

END OF SECTION

SECTION 09 21 16 GYPSUM BOARD ASSEMBLIES

PART 1 GENERAL
1.1 SUMMARY
A. Provide gypsum board assemblies.
1.2 SUBMITTALS
A. Product Data: Submit manufacturer's product data and installation instructions for each material and product used.
1.3 QUALITY ASSURANCE
A. Comply with governing codes and regulations. Provide products of acceptable manufacturers, which have been in satisfactory use in similar service for three years. Use experienced installers. Deliver, handle, and store materials in accordance with manufacturer's instructions.
B. Tolerances: Not more than 1/16-inch difference in true plane at joints between adjacent boards before finishing. After finishing, joints shall be not be visible. Not more than 1/8 inch in 10 feet deviation from true plane, plumb, level and proper relation to adjacent surfaces in finished work.
C. Fire Resistance for Fire-Rated Assemblies: ASTM E 119.
D. Mock-Ups: Provide mock-up as required to demonstrate quality of workmanship and level of finish.
E. Performance: Fire, structural, and seismic performance meeting requirements of building code and local authorities.
PART 2 PRODUCTS
2.1 MATERIALS
A. Gypsum Board:
1. Application: Interior walls, partitions, and ceilings with tape and joint compound finish.
2. Application: Abuse-resistant board at corridors.
3. Application: Cementitious backer units for application of tile.
4. Application: Soffit board at exterior ceilings and soffits.
5. Application: Insulation and vapor barrier systems in gypsum board assemblies.
6. Application: Remodeling at existing gypsum board construction.
7. Application: Installation of access panels in gypsum board assemblies.
8. Material Standard: ASTM C1396.
9. Type: Board for tape and joint compound finish.
a. Type: Regular, moisture-resistant and fire-rated types as required.
b. Typical Thickness: 5/8 inch.
10. Type: Water-resistant gypsum backing board.
a. Type: Regular and fire-rated types as required:
b. Typical Thickness: 5/8 inch.
11. Type: Sag-resistant gypsum board.
a. Type: Regular and fire-rated types as required for ceilings.
b. Thickness: 1/2 inch.
12. Type: Exterior soffit board.
a. Type: Regular and fire-rated types as required:
b. Typical Thickness: 5/8 inch.
13. Type: Abuse-resistant board.
a. Typical Thickness: 5/8 inch.
14. Type: Vinyl-film-faced gypsum board.
a. Typical Thickness: 5/8 inch.
15. Joint Treatment: ASTM C474 and ASTM C840, 3-coat system, paper or fiberglass tape.
16. Auxiliary Materials:
a. Cornerbead, edge trim and control joints.
b. Extruded aluminum reveals and channels.
c. Gypsum board screws, ASTM C 1002.
d. Gypsum board nails, ASTM C 514.
e. Fastening adhesive.
f. Concealed acoustical sealant.
g. Mineral fiber sound attenuation blankets.
h. Mineral fiber thermal insulation.
i. Polyethylene vapor retarder, 6 mils.
j. Polystyrene aggregated finish for ceilings.
k. Acoustical finish.
B. Cementitious Backer Units:
1. Material Standard: ANSI A118.9.
2. Type: Cement-coated Portland cement panels.
a. Thickness: 1/2 inch nominal.
PART 3 EXECUTION
3.1 INSTALLATION
A. Install gypsum board for tape and 3-coat joint compound finish in compliance with ASTM C 840 and GA 216, Level 4 finish. Install gypsum board assemblies true, plumb, level and in proper relation to adjacent surfaces.
B. Provide fire-rated systems where indicated and where required by authorities having jurisdiction.
C. Install boards vertically. Do not allow butt-to-butt joints and joints that do not fall over framing members.
D. Where new partitions meet existing construction, remove existing cornerbeads to provide a smooth transition.
E. Provide insulation full height and thickness in partitions at conference rooms, toilet rooms, between different occupancies, and where required.
F. Provide acoustical sealant at both faces at top and bottom runner tracks, wall perimeters, openings, expansion and control joints.
G. Install trim in strict compliance with manufacturer's instructions and recommendations.
H. Repair surface defects. Leave ready for finish painting or wall treatment.

END OF SECTION

SECTION 09 22 16 NON-STRUCTURAL METAL FRAMING

PART 1 GENERAL
1.1 SUMMARY
A. Provide non-structural metal framing for gypsum board assemblies.
1.2 SUBMITTALS
A. Product Data: Submit manufacturer's product data and installation instructions for each material and product used.
1.3 QUALITY ASSURANCE
A. Comply with governing codes and regulations. Provide products of acceptable manufacturers, which have been in satisfactory use in similar service for three years. Use experienced installers. Deliver, handle, and store materials in accordance with manufacturer's instructions.
B. Tolerances: Not more than 1/8 inch in 10 feet deviation from true plane, plumb, level and proper relation to adjacent surfaces in finished work.
C. Fire Resistance for Fire-Rated Assemblies: ASTM E 119.
D. Mock-Ups: Provide mock-up as required to demonstrate quality of workmanship and level of finish.
E. Performance: Fire, structural, and seismic performance meeting requirements of building code and local authorities.
PART 2 PRODUCTS
2.1 MATERIALS
A. Steel Framing for Walls and Partitions:
1. Material Standard: ASTM C645.
2. Stud Thickness: 20 gauge (.0329 inch).
3. Stud Thickness: 22 gauge (.0276 inch).
4. Stud Thickness: 25 gauge (.0179 inch).
5. Stud Depth, Typical: 2-1/2 inches.
6. Stud Depth, Typical: 3-5/8 inches.
7. Stud Depth, Typical: 4 inches.
8. Stud Depth, Typical: 6 inches.
9. Furring Channel Thickness: 20 gauge (.0329 inch).
10. Furring Channel Thickness: 25 gauge (.0179 inch).
11. Auxiliary Framing Components: Furring brackets, resilient furring channels, Z-furring members, and non-corrosive fasteners.
B. Steel Framing for Suspended and Furred Ceilings:
1. Material Standard: ASTM C645.
2. Attachment: Standard.
3. Attachment: Resilient.
4. Stud Thickness: 20 gauge (.0329 inch).
5. Stud Thickness: 22 gauge (.0276 inch).
6. Stud Thickness: 25 gauge (.0179 inch).
7. Accessories: Furring channels, hangers and inserts.
PART 3 EXECUTION
3.1 INSTALLATION
A. Provide fire-rated systems where indicated and where required by authorities having jurisdiction.
B. Where new partitions meet existing construction, remove existing cornerbeads to provide a smooth transition.
C. Provide acoustical sealant at both faces at top and bottom runner tracks, wall perimeters, openings, expansion and control joints.

END OF SECTION

SECTION 09 30 00 TILING

PART 1 GENERAL
1.1 SUMMARY
A. Provide tile.
1.2 SUBMITTALS
A. Product Data: Submit manufacturer's product data and installation instructions for each material and product used.
B. Samples: Submit two representative samples of each material specified indicating visual characteristics and finish. Include range samples if variation of finish is anticipated.
1. Include manufacturers full range of color and finish options if additional selection is required.
1.3 QUALITY ASSURANCE
A. Comply with governing codes and regulations. Provide products of acceptable manufacturers, which have been in satisfactory use in similar service for three years. Use experienced installers. Deliver, handle, and store materials in accordance with manufacturer's instructions.
B. Tile: ANSI A 137.1.
C. Tile Setting Materials: ANSI A 118 series standard specifications.
D. Tile Installation: ANSI 108 series standard specifications and Tile Council of America, Handbook for Ceramic Tile Installation.
E. Mock-Ups: Provide mock-up as required to demonstrate quality of workmanship.
PART 2 PRODUCTS
2.1 MATERIALS
A. Tile:
1. Application: Interior wall tile over gypsum wallboard.
2. Application: Interior wall tile over tile backer board at wet areas.
3. Application: Interior wall tile over concrete and concrete masonry units.
4. Application: Interior floor tile over concrete slab.
5. Application: Interior floor tile over plywood and wood framing.
6. Application: Exterior wall tile on concrete or masonry backup.
7. Application: Exterior wall tile on tile backer board.
8. Application: Exterior floor tile on slab-on-grade.
9. Application: Exterior floor tile on suspended slabs.
10. Application: Remodeling of existing tile work.
11. Type: Ceramic mosaic tile.
12. Type: Porcelain tile.
13. Type: Quarry tile.
14. Type: Paver tile.
15. Type: Glass Tile.
16. Type: Metallic Tile.
17. Type: Natural Clay Tile.
18. Type: Quartz Stone Tile.
19. Type: Terrazzo Tile.
20. Type: Slate Tile.
21. Type: Stone Tile.
B. Setting Materials:
1. Mortar setting bed.
a. Latex additive.
2. Thin-set mortar.
a. Dry-set Portland cement mortar.
b. Latex-Portland cement mortar.
c. Conductive dry-set mortar.
d. Chemical-resistant epoxy adhesive.
e. Chemical-resistant furan mortar.
f. Modified epoxy emulsion mortar.
3. Organic adhesive.
4. Grout.
a. Sand-Portland cement grout.
b. Dry-set grout.
c. Latex-Portland cement grout.
d. Chemical-resistant epoxy grout.
e. Chemical-resistant furan resin grout.
f. Silicone rubber elastomeric grout for pregrouted sheets.
5. Waterproofing membrane under tile.
a. ANSI A 118.10.
6. Crack suppression membrane under tile.
a. ANSI A 118.10.
7. Elastomeric sealants.
8. Stone thresholds.
PART 3 EXECUTION
3.1 INSTALLATION
A. Comply with Tile Council of America and ANSI Standard Specifications for Installation for substrate and installation required. Comply with manufacturer's instructions and recommendations.
B. Install waterproof membrane in accordance with manufacturer's instructions and recommendations.
C. Lay tile in grid pattern with alignment grids. Layout tile to provide uniform joint widths and to minimize cutting; do not use less than 1/2 tile units.
D. Provide sealant joints where recommended by TCA and approved by Architect.
E. Grout and cure, clean and protect.
3.2 SCHEDULE
A. Tile Schedule: See drawings.

END OF SECTION

SECTION 09 51 00 ACOUSTICAL CEILINGS

PART 1 GENERAL
1.1 SUMMARY
A. Provide acoustical ceilings and suspension systems.
1.2 SUBMITTALS
A. Product Data: Submit manufacturer's product data and installation instructions for each material and product used.
B. Samples: Submit two representative samples of each material specified indicating visual characteristics and finish. Include range samples if variation of finish is anticipated.
C. Extra Stock: Submit extra stock equal to 2 percent of amount installed.
1.3 QUALITY ASSURANCE
A. Comply with governing codes and regulations. Provide products of acceptable manufacturers, which have been in satisfactory use in similar service for three years. Use experienced installers. Deliver, handle, and store materials in accordance with manufacturer's instructions.
B. Performance: Fire, structural, and seismic performance meeting requirements of building code and local authorities. Acoustical performance based on project requirements.
PART 2 PRODUCTS
2.1 MATERIALS
A. Mineral Fiber Acoustical Ceilings:
1. Panel Size: As selected.
2. Panel Edge: As selected.
3. Grid: Exposed flush grid.
4. Suspension System: Heavy duty.
5. Auxiliary Materials:
a. Edge molding and trim.
b. Hold-down clips and impact clips.
c. Concealed acoustical sealant.
PART 3 EXECUTION
3.1 INSTALLATION
A. Install materials and suspension systems in accordance with manufacturer's instructions and recommendations, and ASTM C 636. Coordinate installation with location of mechanical and electrical work to ensure proper locations and anchorage.
B. Level ceiling to within 1/8 inch in 10 feet in both directions. Scribe and cut panels to fit accurately. Measure and layout to avoid less than half panel units.
C. Removal and reinstallation at existing ceilings: Remove and store materials for reuse when allowed. Handle with white gloves and avoid damaging corners and edges. Clean tiles and grid system, which have been removed. Provide additional materials to complete the work and to replace damaged existing materials. New materials shall match existing materials as approved.
D. Adjust, clean, and touch-up all system components.

END OF SECTION

SECTION 09 65 13 RESILIENT BASE AND ACCESSORIES

PART 1 GENERAL
1.1 SUMMARY
A. Provide resilient wall base and accessories.
1.2 SUBMITTALS
A. Product Data: Submit manufacturer's product data and installation instructions for each material and product used.
B. Samples: Submit two representative samples of each material specified indicating visual characteristics and finish. Include range samples if variation of finish is anticipated.
C. Submit extra stock equal to 2% of total used.
1.3 QUALITY ASSURANCE
A. Comply with governing codes and regulations. Provide products of acceptable manufacturers, which have been in satisfactory use in similar service for three years. Use experienced installers. Deliver, handle, and store materials in accordance with manufacturer's instructions.
B. Performance: Fire performance meeting requirements of building code and local authorities.
PART 2 PRODUCTS
2.1 MATERIALS
A. Resilient Wall Base:
1. Standard: ASTM F 1861.
2. Type: TV (vinyl).
3. Style: Cove.
4. Thickness: 0.125 inch
5. Height: 4 inches.
PART 3 EXECUTION
3.1 INSTALLATION
A. Comply with manufacturer's instructions and recommendations. Install in proper relation to adjacent work.
B. Install base and accessories to minimize joints. Install base with joints as far from corners as practical.
C. Clean, polish, and protect.

END OF SECTION

SECTION 09 70 00 WALL FINISHES

PART 1 GENERAL
1.1 SUMMARY
A. Provide wall coverings and surface preparation.
1.2 SUBMITTALS
A. Product Data: Submit manufacturer's product data and installation instructions for each material and product used.
B. Samples: Submit two representative samples of each material specified indicating visual characteristics and finish. Include range samples if variation of finish is anticipated.
C. Extra Stock: Submit extra stock equal to 2 unopened rolls of each type of wall covering used.
1.3 QUALITY ASSURANCE
A. Comply with governing codes and regulations. Provide products of acceptable manufacturers, which have been in satisfactory use in similar service for three years. Use experienced installers. Deliver, handle, and store materials in accordance with manufacturer's instructions.
B. Performance: Fire performance meeting requirements of building code and local authorities.
PART 2 PRODUCTS
2.1 MATERIALS
A. Decorative Metal Wall Panels:
1. Material and Finish: See drawings.
2. Face Sheet: Solid.
3. Face Sheet: Perforated with acoustic core.
B. Decorative Laminate-Faced Wall Panels:
1. Manufacturers: See drawings.
2. Material: Decorative plastic laminate facing and composite core backing.
3. Trim: Matching trim.
C. Rigid Vinyl Wall Covering:
1. Manufacturers: See drawings.
2. Material and Finish: High-impact acrylic/PVC sheet with textured finish.
3. Trim: Matching trim.
D. Vinyl Wall Covering:
1. Manufacturers: See drawings.
2. Stain Resistance: Factory applied polyvinyl fluoride or polymer coating.
3. Serviceability: ASTM F 793 for peelable or strippable wall coverings.
E. Textile Wall Covering:
1. Manufacturers: See drawings.
2. Type: ASTM F 793, Category III, Decorative with Medium Serviceability.
3. Fiber: Cotton wall covering.
4. Fiber: Linen wall covering.
5. Fiber: Silk wall covering.
F. Wood Veneer Wall Covering:
1. Manufacturers: See drawings.
2. Species: See drawings.
3. Veneer Cut: See drawings.
4. Sheet Match: See drawings.
5. Finish: Factory sanded for field finish.
6. Finish: Prefinished.
G. Wallpaper:
1. Manufacturers: See drawings.
2. Type: ASTM F 793, Category I, Decorative Only.
3. Stain Resistance: Factory applied coating.
PART 3 EXECUTION
3.1 INSTALLATION
A. Acclimatize materials; prime and seal substrates; test substrates for moisture content and prepare surfaces in compliance with manufacturer's recommendations.
B. Install in accordance with manufacturer's instructions. Apply adhesive and install with seams plumb and overlapped and double-cut to ensure tight closure except where pattern would not match. Do not place seams within 6" of corners.
C. Remove air bubbles, blisters, wrinkles and other defects; horizontal seams are not permitted. Remove excess adhesive immediately; clean walls and protect surfaces.

END OF SECTION

SECTION 09 91 00 PAINTING

PART 1 GENERAL
1.1 SUMMARY
A. Provide painting and surface preparation.
1.2 SUBMITTALS
A. Product Data: Submit manufacturer's product data and installation instructions for each material and product used.
B. Samples: Submit two representative samples of each material specified indicating visual characteristics and finish. Include range samples if variation of finish is anticipated.
1. Include manufacturers full range of color and finish options if additional selection is required.
C. Extra Stock: Submit 2 unopened gallons of each paint and color used in the project.
1.3 QUALITY ASSURANCE
A. Comply with governing codes and regulations. Provide products of acceptable manufacturers, which have been in satisfactory use in similar service for three years. Use experienced installers. Deliver, handle, and store materials in accordance with manufacturer's instructions.
B. Regulations: Compliance with VOC and environmental regulations.
C. Mock-Ups: Provide mock-up as required to demonstrate quality of workmanship.
1. Provide 4 foot x 4 foot mock-ups of each type of surface.
PART 2 PRODUCTS
2.1 MATERIALS
A. Painting:
1. Manufacturers: Benjamin Moore & Co.; Sherwin-Williams.
2. Application: Interior unfinished surfaces.
3. Application: Exterior unfinished surfaces.
4. Application: Exposed mechanical and electrical items.
5. Application: Repainting of existing surfaces.
6. Primary Coating Type: Latex based paints.
7. Primary Paint Systems: Primer plus two finish coats.
PART 3 EXECUTION
3.1 INSTALLATION
A. Inspect surfaces, report unsatisfactory conditions in writing; beginning work means acceptance of substrate.
B. Comply with manufacturer's instructions and recommendations for preparation, priming and coating work. Coordinate with work of other sections.
C. At existing areas to be repainted, remove blistered or peeling paint to sound substrates. Remove chalk deposits and mildew and wash all surfaces with mild detergent. Perform related minor preparation including caulk and glazing compounds. Spot prime bare areas before priming and painting as specified.
D. Match approved mock-ups for color, texture, and pattern. Re-coat or remove and replace work which does not match or shows loss of adhesion. Clean up, touch up and protect work.
3.2 PAINT SCHEDULE
A. Gypsum Drywall Walls:
1. Gloss:
a. Flat
2. System:
a. 1 coat latex primer
b. 2 coats latex finish
B. Gypsum Drywall Walls and Ceilings in Bathrooms, Kitchens and Wet Areas:
1. Gloss:
a. Semi
2. Texture:
a. Stipple
3. System:
a. 1 coat latex primer
b. 2 coats latex finish
C. Gypsum Drywall Walls, Multicolor Finish:
1. System:
a. 1 coat latex primer
b. 1 coat spray applied multicolor finish
D. Gypsum Drywall Walls to Receive Wall Covering:
1. System:
a. 1 coat latex primer
E. Gypsum Drywall Ceilings:
1. Gloss:
a. Flat
2. System:
a. 1 coat latex primer
b. 2 coats latex finish
F. Plaster:
1. Gloss:
a. Flat
2. System:
a. 1 coat latex primer
b. 2 coats latex finish
G. Wood for Painted Finish:
1. Gloss:
a. Semi
2. System:
a. 1 coat interior alkyd enamel undercoat
b. 2 coats latex enamel
H. Wood for Transparent Finish:
1. Gloss:
a. Satin
2. System:
a. 1 coat water base sealer
b. 2 coats water base varnish
I. Wood for Stain Finish:
1. Gloss:
a. Satin
2. System:
a. 1 coat water base wood stain
b. 1 coat water base sealer
c. 2 coats water base varnish
J. Exterior Wood for Stain Finish:
1. System:
a. 2 coats semi-transparent stain, oil or alkyd resin base
K. Exterior Wood for Painted Finish:
1. Gloss:
a. Semi
2. System:
a. 1 coat exterior primer
b. 2 coats latex enamel
L. Concrete Masonry Units:
1. Gloss:
a. Flat
2. System:
a. 1 coat latex block filler
b. 2 coats latex finish
M. Concrete Walls:
1. Gloss:
a. Flat
2. System:
a. 1 coat latex primer
b. 2 coats latex finish
N. Ferrous Metals:
1. Gloss:
a. Semi
2. System:
a. 1 coat rust-inhibiting primer
b. 2 coats latex enamel
O. Galvanized Metal:
1. Gloss:
a. Semi
2. System:
a. 1 coat galvanized metal primer
b. 2 coats alkyd enamel

END OF SECTION

Alameda County
Dept. of Environmental Health
Approved By: T. Tran

SECTION 10 21 13 TOILET COMPARTMENTS

PART 1 GENERAL
1.1 SUMMARY
A. Provide toilet partitions and screens.
1.2 SUBMITTALS
A. Product Data: Submit manufacturer's product data and installation instructions for each material and product used.
B. Shop Drawings: Submit shop drawings indicating material characteristics, details of construction, connections, and relationship with adjacent construction.
C. Samples: Submit two representative samples of each material specified indicating visual characteristics and finish. Include range samples if variation of finish is anticipated.
1.3 QUALITY ASSURANCE
A. Comply with governing codes and regulations. Provide products of acceptable manufacturers which have been in satisfactory use in similar service for three years. Use experienced installers. Deliver, handle, and store materials in accordance with manufacturer's instructions.
PART 2 PRODUCTS
2.1 MATERIALS
A. Toilet Compartments:
1. Compartments: Floor-anchored, overhead braced.
2. Screens: Wall-hung.
3. Style: Maximum privacy style.
4. Material: Stainless steel.
a. ASTM A 666, Type 304 stainless steel, No. 4 bright, directional polish.
PART 3 EXECUTION
3.1 INSTALLATION
A. Install materials and systems in accordance with manufacturer's instructions and approved submittals. Install materials and systems in proper relation with adjacent construction and with uniform appearance. Coordinate with work of other sections.
B. Limit openings between panels, doors and pilasters to less than 1/2".
C. Adjust hardware, clean, and protect work.

END OF SECTION

SECTION 10 28 13 TOILET ACCESSORIES

PART 1 GENERAL
1.1 SUMMARY
A. Provide toilet, bath and laundry accessories.
1.2 SUBMITTALS
A. Product Data: Submit manufacturer's product data and installation instructions for each material and product used.
B. Shop Drawings: Submit shop drawings indicating material characteristics, details of construction, connections, and relationship with adjacent construction.
1.3 QUALITY ASSURANCE
A. Comply with governing codes and regulations. Provide products of acceptable manufacturers, which have been in satisfactory use in similar service for three years. Use experienced installers. Deliver, handle, and store materials in accordance with manufacturer's instructions.
PART 2 PRODUCTS
2.1 MATERIALS
A. Toilet and Bath Accessories:
1. Accessory: Paper towel dispensers.
2. Accessory: Toilet tissue dispensers, double roll.
3. Accessory: Waste receptacles.
4. Accessory: Combination towel dispenser/waste receptacle units.
5. Accessory: Multipurpose units.
6. Accessory: Grab bars.
7. Accessory: Soap dispensers, wall mounted.
8. Accessory: Seat cover dispensers.
9. Accessory: Undercounter lavatory pipe guards.
10. Accessory: Electric hand dryers.
11. Finish: Stainless steel.
PART 3 EXECUTION
3.1 INSTALLATION
A. Install materials and systems in accordance with manufacturer's instructions and approved submittals. Install materials and systems in proper relation with adjacent construction and with uniform appearance. Coordinate with work of other sections.
B. Restore damaged finishes and test for proper operation. Clean and protect work from damage.

END OF SECTION

SECTION 10 44 00 FIRE PROTECTION SPECIALTIES

PART 1 GENERAL
1.1 SUMMARY
A. Provide fire extinguishers, cabinets and accessories.
1.2 SUBMITTALS
A. Product Data: Submit manufacturer's product data and installation instructions for each material and product used.
B. Shop Drawings: Submit shop drawings indicating material characteristics, details of construction, connections, and relationship with adjacent construction.
1.3 QUALITY ASSURANCE
A. Comply with governing codes and regulations. Provide products of acceptable manufacturers which have been in satisfactory use in similar service for three years. Use experienced installers. Deliver, handle, and store materials in accordance with manufacturer's instructions.
B. Standards: UL and FM listed products, NFPA 10.
C. Regulations: ADAAG.
PART 2 PRODUCTS
2.1 MATERIALS
A. Fire Extinguishers:
1. Type: Per project requirements.
2. Rating: Sized for project requirements.
3. Public Area Mounting: Cabinet mounted.
4. Service Area Mounting: Metal brackets.
B. Cabinets:
1. Mounting: Semi-recessed.
2. Trim: Trimless.
3. Doors: Aluminum, clear anodized finish.
4. Door Style: Full-glass panel.
5. Accessories:
a. Glass breaker or fire handle.
b. Signage.
PART 3 EXECUTION
3.1 INSTALLATION
A. Install materials and systems in accordance with manufacturer's instructions and approved submittals. Install materials and systems in proper relation with adjacent construction and with uniform appearance. Coordinate with work of other sections.
B. Install fire extinguishers in mechanical and service areas with wall-hung brackets at locations and heights indicated and acceptable to authorities having jurisdiction.
C. Install fire extinguishers in cabinets in public areas plumb and level at heights acceptable to authorities having jurisdiction.
D. Restore damaged finishes. Clean and protect work from damage.

END OF SECTION

SECTION 26 51 00 INTERIOR LIGHTING

PART 1 GENERAL
1.1 SUMMARY
A. Provide interior lighting.
1.2 SUBMITTALS
A. Product Data: Submit manufacturer's product data and installation instructions for each material and product used.
B. Shop Drawings: Submit shop drawings indicating material characteristics, details of construction, connections, and relationship with adjacent construction.
C. Operation and Maintenance Data: Submit manufacturer's operation and maintenance data, including operating instructions, list of spare parts and maintenance schedule.
1.3 QUALITY ASSURANCE
A. Comply with governing codes and regulations. Provide products of acceptable manufacturers, which have been in satisfactory use in similar service for three years. Use experienced installers. Deliver, handle, and store materials in accordance with manufacturer's instructions.
B. Compliance: NFPA 70 "National Electrical Code."
PART 2 PRODUCTS
2.1 MATERIALS
A. Interior Lighting:
1. Application: Locations indicated.
2. Sustainable Design: Utility efficient equipment and fixtures.
3. Components: Suitable for service.
a. Fluorescent Fixtures: UL 1570; ballasts, UL 935, energy saving.
b. High Intensity Discharge (HID) Fixtures: UL 1572; ballasts, UL 1029.
c. Incandescent Fixtures: UL 1571.
d. LED Fixtures: UL 844.
e. LED Light Source: UL 8750.
f. Fixtures for Hazardous Locations: UL 844.
g. Track Lighting Systems: UL 1574.
h. Exit Signs: UL 924, self-powered battery type and luminous source type.
i. Emergency Lighting Units: UL 924.
j. Emergency Fluorescent Power Supply: UL 924.
k. Lamps: ANSI Standards, C78 series.
l. Suspended Fixture Support Components: Stem, rod, and hook hangers.
PART 3 EXECUTION
3.1 INSTALLATION
A. Install materials and systems in accordance with manufacturer's instructions and approved submittals. Install materials in proper relation with adjacent construction and with uniform appearance for exposed work. Coordinate with work of other sections. Provide proper clearances for servicing.
B. Maintain indicated fire ratings of walls, partitions, ceilings and floors at penetrations. Seal with firestopping to maintain fire rating.
C. Test all systems for proper operation. Label circuits in electrical panels.
D. Restore damaged finishes. Clean and protect work from damage.
E. Instruct Owner's personnel in proper operation of systems.

END OF SECTION

SECTION 28 31 00 FIRE DETECTION AND ALARM

PART 1 GENERAL
1.1 SUMMARY
A. Provide fire detection and alarm systems.
1.2 SUBMITTALS
A. Product Data: Submit manufacturer's product data and installation instructions for each material and product used.
B. Shop Drawings: Submit shop drawings indicating material characteristics, details of construction, connections, and relationship with adjacent construction.
1. Shop drawings shall be prepared and stamped by a qualified engineer licensed in the jurisdiction of the project.
C. Warranty: Submit manufacturer's standard warranty. Include labor and materials to repair or replace defective materials.
D. Operation and Maintenance Data: Submit manufacturer's operation and maintenance data, including operating instructions, list of spare parts and maintenance schedule.
1.3 QUALITY ASSURANCE
A. Comply with governing codes and regulations. Provide products of acceptable manufacturers, which have been in satisfactory use in similar service for three years. Use experienced installers. Deliver, handle, and store materials in accordance with manufacturer's instructions.
B. Compliance: NFPA 70, 71, 72, 72E, 72G, 72H.
PART 2 PRODUCTS
2.1 MATERIALS
A. Fire Detection and Alarm Systems:
1. Application: Locations indicated.
2. Sustainable Design: Utility efficient equipment and fixtures.
3. Signal Transmission: Hard-wired individual circuits.
4. Audible Alarm Indication: Horns, bells, and voice alarm messages.
5. Interface: Smoke removal systems, smoke dampers, air handling units control.
6. Components: Suitable for service.
a. Manual Pull Stations: Double-action type, metal or plastic.
b. Smoke Detectors: UL 268, self-restoring type with visual indicator.
c. Thermal Detectors: Fixed-temperature and rate-of-rise type.
d. Flame Detectors: Ultraviolet type with delay.
e. Fire Alarm Bells: Electric vibrating under-dome type.
f. Fire Alarm Horns: Electric vibrating polarized type.
g. Visual Alarm Devices: Dual-voltage strobe lights.
h. Voice/Tone Speakers: UL 1480 type.
i. Fire Fighters Telephones: Handset with supervised communication lines.
j. Device Location-Indicating Lights: System-voltage-indicating light.
k. Magnetic Door Holders: Wall or floor mounted type.
l. Fire Alarm Control Panel: UL 864.
m. Graphic Annunciator: LED indicators on graphic building floor plan.
n. Transmitter: Auto-dialer type.
o. Emergency Power Supply: Battery operated, 24-hour operation capacity.
p. Line-Voltage and Low-Voltage Circuits: Solid copper conductors, color-coded.
q. Conduit: Rigid steel, hardened, fire-rated.
PART 3 EXECUTION
3.1 INSTALLATION
A. Install materials and systems in accordance with manufacturer's instructions and approved submittals. Install materials in proper relation with adjacent construction and with uniform appearance for exposed work. Coordinate with work of other sections. Provide proper clearances for servicing.
B. Comply with National Electrical Code and building code requirements. Maintain continuity of circuits required to supply new or existing equipment in service.
C. Provide core drilling as required for new work.
D. Conceal conduit to the greatest extent practical.
E. Center ceiling-mounted elements in center of ceiling tiles as applicable.
F. Maintain indicated fire ratings of walls, partitions, ceilings and floors at penetrations. Seal with firestopping to maintain fire rating.
G. Test all systems for proper operation. Label circuits in electrical panels.
H. Restore damaged finishes. Clean and protect work from damage.
I. Instruct Owner's personnel in proper operation of systems.

END OF SECTION

CO AR

CO-AR DESIGN, INC.
680 Brea Canyon Rd., Ste. 178
Diamond Bar, CA 91789

Office: 909-598-0186
http:\\www.coardesign.com

Dennis J. Lee, Architect
dennisl@coardesign.com

THESE DRAWINGS ARE THE PROPERTY OF THE ARCHITECT. THE DESIGNS SHOWN AND DESCRIBED HERIN INCLUDING ALL TECHNICAL DRAWINGS ARE PROPRIETARY AND CANNOT BE COPIED, DUPLICATED OR COMMERCIALLY EXPLOITED, IN WHOLE OR IN PART. THE DRAWINGS AND SPECIFICATIONS SHALL NOT BE USED BY THE OWNER ON OTHER PROJECTS, FOR ADDITIONS TO THIS PROJECT, OR FOR COMPLETION OF THIS PROJECT BY OTHERS. THE OWNER AGREES TO HOLD HARMLESS, INDEMNIFY AND DEFEND THE ARCHITECT AGAINST ALL DAMAGES, CLAIMS AND LOSSES, INCLUDING DEFENSE COSTS, ARISING OUT OF ANY REUSE OF THE PLANS AND SPECIFICATIONS WITHOUT THE WRITTEN AUTHORIZATION OF THE ARCHITECT OF RECORD.

COPYRIGHT © 2022 CO-AR DESIGN, INC., ALL RIGHTS RESERVED.

SEAL
LICENSED ARCHITECT
DENNIS JOON HO LEE
C-29168
4/30/2023
RENEWAL DATE
STATE OF CALIFORNIA

NOTES

PROJECT
SALTALK FREMONT KITCHEN TENANT IMPROVEMENT

42550 ALBRAE ST.,
FREMONT, CA 94538

CLIENT
SALTALK, INC.
3334 VICTOR CT.,
SANTA CLARA, CA 95054

SUBMITTALS/ REVISIONS

4	1ST PLANNING SUBMITTAL		2/10/22
5	SD		3/7/22
6	1ST HEALTH SUBMITTAL		4/7/22
7	1ST BLDG SUBMITTAL		4/11/22
8	2ND BLDG SUBMITTAL	1	7/29/22
9	3RD USD SUBMITTAL	3	9/12/22
10	2ND HEALTH SUBMITTAL	4	xx/xx/22
11	3RD BLDG SUBMITTAL	5	xx/xx/22

PROJECT NO	202201
SCALE	AS SHOWN
DATE	10/4/2022
DRAWN BY	ED / FW
CHECKED BY	DL

SHEET TITLE
DESIGN SPECIFICATIONS

SHEET NO
A-0.5

BIMcloud: COAR-CONFERENCE - BIMcloud Basic for Archicad 26/202201-Fremont-Ghost Kitchen Tuesday, October 04, 2022 10:09 AM

CALIFORNIA GREEN BUILDING CODE NOTES

5.508.2.2.2.2.1 Chain tethers. Chain tethers to fit over the stem are required for valves designed to have seal caps.

Exception: Valves with seal caps that are not removed from the valve during stem operation.

5.508.2.3 Refrigerated service cases. Refrigerated service cases holding food products containing vinegar and salt shall have evaporator coils of corrosion-resistant material, such as stainless steel; or be coated to prevent corrosion from these substances.

5.508.2.3.1 Coil coating. Consideration shall be given to the heat transfer efficiency of coil coating to maximize energy efficiency.

5.508.2.4 Refrigerant receivers. Refrigerant receivers with capacities greater than 200 pounds shall be fitted with a device that indicates the level of refrigerant in the receiver.

5.508.2.5 Pressure testing. The system shall be pressure tested during installation prior to evacuation and charging.

5.508.2.5.1 Minimum pressure. The system shall be charged with regulated dry nitrogen and appropriate tracer gas to bring system pressure up to 300 psig minimum.

5.508.2.5.2 Leaks. Check the system for leaks, repair any leaks, and retest for pressure using the same gauge.

5.508.2.5.3 Allowable pressure change. The system shall stand, unaltered, for 24 hours with no more than a +/- one pound pressure change from 300 psig, measured with the same gauge.

5.508.2.6 Evacuation. The system shall be evacuated after pressure testing and prior to charging.

5.508.2.6.1 First vacuum. Pull a system vacuum down to at least 1000 microns (+/- 50 microns), and hold for 30 minutes.

5.508.2.6.2 Second vacuum. Pull a second system vacuum to a minimum of 500 microns and hold for 30 minutes.

5.508.2.6.3 Third vacuum. Pull a third vacuum down to a minimum of 300 microns, and hold for 24 hours with a maximum drift of 100 microns over a 24-hour period.

SECTION 5.505 INDOOR MOISTURE CONTROL

5.505.1 Indoor moisture control. Buildings shall meet or exceed the provisions of *California Building Code,* CCR, Title 24, Part 2, Sections 1202 (Ventilation) and Chapter 14 (Exterior Walls). For additional measures, see Section 5.407.2 of this code.

SECTION 5.506 INDOOR AIR QUALITY

5.506.1 Outside air delivery. For mechanically or naturally ventilated spaces in buildings, meet the minimum requirements of Section 120.1 (Requirements For Ventilation) of the *California Energy Code,* or the applicable local code, whichever is more stringent, and Division 1, Chapter 4 of CCR, Title 8.

5.506.2 Carbon dioxide (CO2) monitoring. For buildings or additions equipped with demand control ventilation, CO2 sensors and ventilation controls shall be specified and installed in accordance with the requirements of the *California Energy Code,* Section 120.1(c)(4).

SECTION 5.507 ENVIRONMENTAL COMFORT

5.507.4 Acoustical control. Employ building assemblies and components with Sound Transmission Class (STC) values determined in accordance with ASTM E90 and ASTM E413 or Outdoor-Indoor Sound Transmission Class (OITC) determined in accordance with ASTM E1332, using either the prescriptive or performance method in Section 5.507.4.1 or 5.507.4.2.

Exception: Buildings with few or no occupants or where occupants are not likely to be affected by exterior noise, as determined by the enforcement authority, such as factories, stadiums, storage, enclosed parking structures and utility buildings.

Exception: [DSA-SS] For public schools and community colleges, the requirements of this section and all subsections apply only to new construction.

5.507.4.1 Exterior noise transmission, prescriptive method. Wall and roof-ceiling assemblies exposed to the noise source making up the building or addition envelope or altered envelope shall meet a composite STC rating of at least 50 or a composite OITC rating of no less than 40, with exterior windows of a minimum STC of 40 or OITC of 30 in the following locations:

1. Within the 65 CNEL noise contour of an airport.

   Exceptions:

   1. L_{dn} or CNEL for military airports shall be determined by the facility Air Installation Compatible Land Use Zone (AICUZ) plan.
   2. L_{dn} or CNEL for other airports and heliports for which a land use plan has not been developed shall be determined by the local general plan noise element.

2. Within the 65 CNEL or L_{dn} noise contour of a freeway or expressway, railroad, industrial source or fixed-guideway source as determined by the Noise Element of the General Plan.

5.507.4.1.1 Noise exposure where noise contours are not readily available. Buildings exposed to a noise level of 65 dB L_{eq}-1-hr during any hour of operation shall have building, addition or alteration exterior wall and roof-ceiling assemblies exposed to the noise source meeting a composite STC rating of at least 45 (or OITC 35), with exterior windows of a minimum STC of 40 (or OITC 30).

5.507.4.2 Performance method. For buildings located as defined in Section 5.507.4.1 or 5.507.4.1.1, wall and roof-ceiling assemblies exposed to the noise source making up the building or addition envelope or altered envelope shall be constructed to provide an interior noise environment attributable to exterior sources that does not exceed an hourly equivalent noise level (L_{eq}-1Hr) of 50 dBA in occupied areas during any hour of operation.

5.507.4.2.1 Site features. Exterior features such as sound walls or earth berms may be utilized as appropriate to the building, addition or alteration project to mitigate sound migration to the interior.

5.507.4.2.2 Documentation of compliance. An acoustical analysis documenting complying interior sound levels shall be prepared by personnel approved by the architect or engineer of record.

5.507.4.3 Interior sound transmission. Wall and floor-ceiling assemblies separating tenant spaces and tenant spaces and public places shall have an STC of at least 40.

Note: Examples of assemblies and their various STC ratings may be found at the California Office of Noise Control: http://www.toolbase.org/PDF/CaseStudies/stc_icc_ratings.pdf.

SECTION 5.508 OUTDOOR AIR QUALITY

5.508.1 Ozone depletion and greenhouse gas reductions. Installations of HVAC, refrigeration and fire suppression equipment shall comply with Sections 5.508.1.1 and 5.508.1.2.

5.508.1.1 Chlorofluorocarbons (CFCs). Install HVAC, refrigeration and fire suppression equipment that do not contain CFCs.

5.508.1.2 Halons. Install HVAC, refrigeration and fire suppression equipment that do not contain Halons.

5.508.2 Supermarket refrigerant leak reduction. New commercial refrigeration systems shall comply with the provisions of this section when installed in retail food stores 8,000 square feet or more conditioned area, and that utilize either refrigerated display cases, or walk-in coolers or freezers connected to remote compressor units or condensing units. The leak reduction measures apply to refrigeration systems containing high-global-warming potential (high-GWP) refrigerants with a GWP of 150 or greater. New refrigeration systems include both new facilities and the replacement of existing refrigeration systems in existing facilities.

Exception: Refrigeration systems containing low-global warming potential (low-GWP) refrigerant with a GWP value less than 150 are not subject to this section. Low-GWP refrigerants are nonozone-depleting refrigerants that include ammonia, carbon dioxide (CO_2), and potentially other refrigerants.

5.508.2.1 Refrigerant piping. Piping compliant with the *California Mechanical Code* shall be installed to be accessible for leak protection and repairs. Piping runs using threaded pipe, copper tubing with an outside diameter (OD) less than $^1/_4$ inch, flared tubing connections and short radius elbows shall not be used in refrigerant systems except as noted below.

5.508.2.1.1 Threaded pipe. Threaded connections are permitted at the compressor rack.

5.508.2.1.2 Copper pipe. Copper tubing with an OD less than $^1/_4$ inch may be used in systems with a refrigerant charge of 5 pounds or less.

5.508.2.1.2.1 Anchorage. One-fourth-inch OD tubing shall be securely clamped to a rigid base to keep vibration levels below 8 mils.

5.508.2.1.3 Flared tubing connections. Double-flared tubing connections may be used for pressure controls, valve pilot lines and oil.

Exception: Single-flared tubing connections may be used with a multiring seal coated with industrial sealant suitable for use with refrigerants and tightened in accordance with manufacturer's recommendations.

5.508.2.1.4 Elbows. Short radius elbows are only permitted where space limitations prohibit use of long radius elbows.

5.508.2.2 Valves. Valves and fittings shall comply with the *California Mechanical Code* and as follows.

5.508.2.2.1 Pressure relief valves. For vessels containing high-GWP refrigerant, a rupture disc shall be installed between the outlet of the vessel and the inlet of the pressure relief valve.

5.508.2.2.1.1 Pressure detection. A pressure gauge, pressure transducer or other device shall be installed in the space between the rupture disc and the relief valve inlet to indicate a disc rupture or discharge of the relief valve.

5.508.2.2.2 Access valves. Only Schrader access valves with a brass or steel body are permitted for use.

5.508.2.2.2.1 Valve caps. For systems with a refrigerant charge of 5 pounds or more, valve caps shall be brass or steel and not plastic.

5.508.2.2.2.2 Seal caps. If designed for it, the cap shall have a neoprene O-ring in place.

TABLE 5.504.4.3
VOC CONTENT LIMITS FOR ARCHITECTURAL COATINGS[2,3]
Grams of VOC per Liter of Coating, Less Water and Less Exempt Compounds

COATING CATEGORY	CURENT LIMIT
Flat coatings	50
Nonflat coatings	100
Nonflat-high gloss coatings	150
SPECIALTY COATINGS	
Aluminum roof coatings	400
Basement specialty coatings	400
Bituminous roof coatings	50
Bituminous roof primers	350
Bond breakers	350
Concrete curing compounds	350
Concrete/masonry sealers	100
Driveway sealers	50
Dry fog coatings	150
Faux finishing coatings	350
Fire resistive coatings	350
Floor coatings	100
Form-release compounds	250
Graphic arts coatings (sign paints)	500
High temperature coatings	420
Industrial maintenance coatings	250
Low solids coatings[1]	120
Magnesite cement coatings	450
Mastic texture coatings	100
Metallic pigmented coatings	500
Multicolor coatings	250
Pretreatment wash primers	420
Primers, sealers, and undercoaters	100
Reactive penetrating sealers	350
Recycled coatings	250
Roof coatings	50
Rust preventative coatings	250
Shellacs Clear Opaque	 730 550
Specialty primers, sealers and undercoaters	100
Stains	250
Stone consolidants	450
Swimming pool coatings	340
Traffic marking coatings	100
Tub and tile refinish coatings	420
Waterproofing membranes	250
Wood coatings	275
Wood preservatives	350
Zinc-rich primers	340

1. Grams of VOC per liter of coating, including water and including exempt compounds.
2. The specified limits remain in effect unless revised limits are listed in subsequent columns in the table.
3. Values in this table are derived from those specified by the California Air Resources Board, Architectural Coatings Suggested Control Measure, February 1, 2008. More information is available from the Air Resources Board.

5.504.4.4 Carpet systems. All carpet installed in the building interior shall meet at least one of the following testing and product requirements:

1. Carpet and Rug Institute's Green Label Plus Program;
2. Compliant with the VOC-emission limits and testing requirements specified in the California Department of Public Health Standard Method for the Testing and Evaluation of Volatile Organic Chemical Emissions from Indoor Sources Using Environmental Chambers, Version 1.1, February 2010 (also known as CDPH Standard Method V1.1 or *Specification 01350);*
3. NSF/ANSI 140 at the Gold level or higher;
4. Scientific Certifications Systems Sustainable Choice; or
5. Compliant with the Collaborative for High Performance Schools California (2014 CA-CHPS) Criteria and listed in the CHPS High Performance Product Database.

5.504.4.4.1 Carpet cushion. All carpet cushion installed in the building interior shall meet the requirements of the Carpet and Rug Institute's Green Label program.

5.504.4.4.2 Carpet adhesive. All carpet adhesive shall meet the requirements of Table 5.504.4.1.

5.504.4.5 Composite wood products. Hardwood plywood, particleboard and medium density fiberboard composite wood products used on the interior or exterior of the building shall meet the requirements for formaldehyde as specified in ARB's Air Toxics Control Measure (ATCM) for Composite Wood (17 CCR 93120 et seq.) Those materials not exempted under the ATCM must meet the specified emission limits, as shown in Table 5.504.4.5.

TABLE 5.504.4.5
FORMALDEHYDE LIMITS[1]
Maximum Formaldehyde Emissions in Parts per Million

PRODUCT	CURRENT LIMIT
Hardwood plywood veneer core	0.05
Hardwood plywood composite core	0.05
Particleboard	0.09
Medium density fiberboard	0.11
Thin medium density fiberboard[2]	0.13

1. Values in this table are derived from those specified by the California Air Resources Board, Air Toxics Control Measure for Composite Wood as tested in accordance with ASTM E1333. For additional information, see *California Code of Regulations,* Title 17, Sections 93120 through 93120.12.
2. Thin medium density fiberboard has a maximum thickness of $^5/_{16}$ inch (8 mm).

5.504.4.5.1 Early compliance. Reserved.

5.504.4.5.3 Documentation. Verification of compliance with this section shall be provided as requested by the enforcing agency. Documentation shall include at least one of the following:

1. Product certifications and specifications.
2. Chain of custody certifications.
3. Product labeled and invoiced as meeting the Composite Wood Products regulation (see CCR, Title 17, Section 93120, *et seq.*).
4. Exterior grade products marked as meeting the PS-1 or PS-2 standards of the Engineered Wood Association, the Australian AS/NZS 2269 or European 636 3S standards.
5. Other methods acceptable to the enforcing agency.

5.504.4.6 Resilient flooring systems. For 80 percent of floor area receiving resilient flooring, installed resilient flooring shall meet at least one of the following:

1. Certified under the Resilient Floor Covering Institute (RFCI) FloorScore program;
2. Compliant with the VOC-emission limits and testing requirements specified in the California Department of Public Health's 2010 Standard Method for the Testing and Evaluation Chambers, Version 1.1, February 2010;
3. Compliant with the Collaborative for High Performance Schools California (2014 CA-CHPS) Criteria and listed in the CHPS High Performance Product Database; or
4. Products certified under UL GREENGUARD Gold (formerly the Greenguard Children's & Schools Program).

5.504.4.6.1 Verification of compliance. Documentation shall be provided verifying that resilient flooring materials meet the pollutant emission limits.

5.504.5.3 Filters. In mechanically ventilated buildings, provide regularly occupied areas of the building with air filtration media for outside and return air that provides at least a Minimum Efficiency Reporting Value (MERV) of 13. MERV 13 filters shall be installed prior to occupancy, and recommendations for maintenance with filters of the same value shall be included in the operation and maintenance manual.

Exception: Existing mechanical equipment.

5.504.5.3.1 Labeling. Installed filters shall be clearly labeled by the manufacturer indicating the MERV rating.

5.504.7 Environmental tobacco smoke (ETS) control. Where outdoor areas are provided for smoking, prohibit smoking within 25 feet of building entries, outdoor air intakes and operable windows and within the building as already prohibited by other laws or regulations; or as enforced by ordinances, regulations or policies of any city, county, city and county, California Community College, campus of the California State University, or campus of the University of California, whichever are more stringent. When ordinances, regulations or policies are not in place, post signage to inform building occupants of the prohibitions.

SECTION 5.504 POLLUTANT CONTROL

5.504.1 Temporary ventilation. The permanent HVAC system shall only be used during construction if necessary to condition the building or areas of addition or alteration within the required temperature range for material and equipment installation. If the HVAC system is used during construction, use return air filters with a Minimum Efficiency Reporting Value (MERV) of 8, based on ASHRAE 52.2-1999, or an average efficiency of 30 percent based on ASHRAE 52.1-1992. Replace all filters immediately prior to occupancy, or, if the building is occupied during alteration, at the conclusion of construction.

5.504.3 Covering of duct openings and protection of mechanical equipment during construction. At the time of rough installation and during storage on the construction site until final startup of the heating, cooling and ventilating equipment, all duct and other related air distribution component openings shall be covered with tape, plastic, sheetmetal or other methods acceptable to the enforcing agency to reduce the amount of dust, water and debris which may enter the system.

5.504.4 Finish material pollutant control. Finish materials shall comply with Sections 5.504.4.1 through 5.504.4.6.

5.504.4.1 Adhesives, sealants and caulks. Adhesives, sealants, and caulks used on the project shall meet the requirements of the following standards:

1. Adhesives, adhesive bonding primers, adhesive primers, sealants, sealant primers and caulks shall comply with local or regional air pollution control or air quality management district rules where applicable, or SCAQMD Rule 1168 VOC limits, as shown in Tables 5.504.4.1 and 5.504.4.2. Such products also shall comply with the Rule 1168 prohibition on the use of certain toxic compounds (chloroform, ethylene dichloride, methylene chloride, perchloroethylene and trichloroethylene), except for aerosol products as specified in subsection 2, below.
2. Aerosol adhesives, and smaller unit sizes of adhesives, and sealant or caulking compounds (in units of product, less packaging, which do not weigh more than one pound and do not consist of more than 16 fluid ounces) shall comply with statewide VOC standards and other requirements, including prohibitions on use of certain toxic compounds, of *California Code of Regulations,* Title 17, commencing with Section 94507.

TABLE 5.504.4.1
ADHESIVE VOC LIMIT[1,2]
Less Water and Less Exempt Compounds in Grams Per Liter

ARCHITECTURAL APPLICATIONS	CURRENT VOC LIMIT
Indoor carpet adhesives	50
Carpet pad adhesives	50
Outdoor carpet adhesives	150
Wood flooring adhesive	100
Rubber floor adhesives	60
Subfloor adhesives	50
Ceramic tile adhesives	65
VCT and asphalt tile adhesives	50
Drywall and panel adhesives	50
Cove base adhesives	50
Multipurpose construction adhesives	70
Structural glazing adhesives	100
Single-ply roof membrane adhesives	250
Other adhesive not specifically listed	50
SPECIALTY APPLICATIONS	
PVC welding	510
CPVC welding	490
ABS welding	325
Plastic cement welding	250
Adhesive primer for plastic	550
Contact adhesive	80
Special purpose contact adhesive	250
Structural wood member adhesive	140
Top and trim adhesive	250
SUBSTRATE SPECIFIC APPLICATIONS	
Metal to metal	30
Plastic foams	50
Porous material (except wood)	50
Wood	30
Fiberglass	80

1. If an adhesive is used to bond dissimilar substrates together the adhesive with the highest VOC content shall be allowed.
2. For additional information regarding methods to measure the VOC content specified in this table, see South Coast Air Quality Management District Rule 1168. http://www.arb.ca.gov/DRDB/SC/CURHTML/R1168.PDF.

TABLE 5.504.4.2
SEALANT VOC LIMIT
Less Water and Less Exempt Compounds in Grams per Liter

SEALANTS	CURRENT VOC LIMIT
Architectural	250
Marine deck	760
Nonmembrane roof	300
Roadway	250
Single-ply roof membrane	450
Other	420
SEALANT PRIMERS	
Architectural Nonporous Porous	 250 775
Modified bituminous	500
Marine deck	760
Other	750

Note: For additional information regarding methods to measure the VOC content specified in these tables, see South Coast Air Quality Management District Rule 1168.

5.504.4.3 Paints and coatings. Architectural paints and coatings shall comply with VOC limits in Table 1 of the ARB Architectural Coatings Suggested Control Measure, as shown in Table 5.504.4.3, unless more stringent local limits apply. The VOC content limit for coatings that do not meet the definitions for the specialty coatings categories listed in Table 5.504.4.3 shall be determined by classifying the coating as a Flat, Nonflat or Nonflat-High Gloss coating, based on its gloss, as defined in Subsections 4.21, 4.36 and 4.37 of the 2007 California Air Resources Board Suggested Control Measure, and the corresponding Flat, Nonflat or Nonflat-High Gloss VOC limit in Table 5.504.4.3 shall apply.

5.504.4.3.1 Aerosol paints and coatings. Aerosol paints and coatings shall meet the PWMIR Limits for ROC in Section 94522(a)(3) and other requirements, including prohibitions on use of certain toxic compounds and ozone depleting substances, in Sections 94522(c)(2) and (d)(2) of *California Code of Regulations,* Title 17, commencing with Section 94520; and in areas under the jurisdiction of the Bay Area Air Quality Management District additionally comply with the percent VOC by weight of product limits of Regulation 8 Rule 49.

5.504.4.3.2 Verification. Verification of compliance with this section shall be provided at the request of the enforcing agency. Documentation may include, but is not limited to, the following:

1. Manufacturer's product specification
2. Field verification of on-site product containers

Alameda County
Dept. of Environmental Health
Approved By: T. Tran

Mandatory	Recycling by occupants (with exception)	5.410.1	✓				NEW TRASH ENCLOSURE, SEE A-1.1 & A-1.2
Mandatory	Recycling by occupants: additions (with exception)	5.410.1.1			✓		
Mandatory	Recycling by occupants: sample ordinance	5.410.1.2			✓		
Mandatory	Commissioning new buildings (≥ 10,000 sf) [N]	5.410.2			✓		
Mandatory	Owner's or owner representative's Project Requirements (OPR) [N]	5.410.2.1			✓		
Mandatory	Basis of Design (BOD) [N]	5.410.2.2			✓		
Mandatory	Commissioning plan [N]	5.410.2.3			✓		
Mandatory	Functional performance testing [N]	5.410.2.4			✓		
Mandatory	Documentation and training [N]	5.410.2.5			✓		
Mandatory	Systems manual [N]	5.410.2.5.1			✓		
Mandatory	Systems operation training [N]	5.410.2.5.2			✓		
Mandatory	Commissioning report [N]	5.410.2.6			✓		
Mandatory	Testing and adjusting for new buildings < 10,000 sf or new systems that serve additions or alterations [A]	5.410.4	✓				M-0.1
Mandatory	System testing plan for renewable energy, landscape irrigation and water reuse [A]	5.410.4.2			✓		
Mandatory	Procedures for testing and adjusting	5.410.4.3	✓				M-0.1
Mandatory	Procedures for HVAC balancing	5.410.4.3.1	✓				M-0.1
Mandatory	Reporting for testing and adjusting	5.410.4.4	✓				M-0.1
Mandatory	Operation and maintenance (O&M) manual	5.410.4.5	✓				M-0.1
Mandatory	Inspection and reports	5.410.4.5.1	✓				M-0.1

DIVISION 5.5 Environmental Quality

Requirement	SECTION TITLE	CODE SECTION	Y	N	N/A	O	PLAN SHEET, SPEC, OR ATTACH REFERENCE
Mandatory	Fireplaces	5.503.1			✓		
Mandatory	Woodstoves	5.503.1.1			✓		
Mandatory	Temporary ventilation	5.504.1	✓				M-0.1
Mandatory	Covering of ducts openings and protection of mechanical equipment during construction	5.504.3	✓				M-0.1
Mandatory	Adhesives, sealants, and caulks	5.504.4.1	✓				A-0.6
Mandatory	Paints and coatings	5.504.4.3	✓				A-0.6
Mandatory	Aerosol paints and coatings	5.504.4.3.1	✓				A-0.6
Mandatory	Aerosol paints and coatings: verification	5.504.4.3.2	✓				A-0.6
Mandatory	Carpet systems	5.504.4.4			✓		
Mandatory	Carpet cushion	5.504.4.4.1			✓		
Mandatory	Carpet adhesives per Table 5.504.4.1	5.504.4.4.2			✓		
Mandatory	Composite wood products	5.504.4.5	✓				A-0.6
Mandatory	Composite wood products: documentation	5.504.4.5.3	✓				A-0.6
Mandatory	Resilient flooring systems	5.504.4.6			✓		
Mandatory	Resilient flooring: verification of compliance	5.504.4.6.1			✓		
Mandatory	Filters (with exceptions)	5.504.5.3	✓				A-0.6
Mandatory	Filters: labeling	5.504.5.3.1	✓				A-0.6
Mandatory	Environmental tobacco smoke (ETS) control	5.504.7	✓				A-0.6
Mandatory	Indoor moisture control	5.505.1	✓				A-0.6
Mandatory	Outside air delivery	5.506.1	✓				A-0.6
Mandatory	Carbon dioxide (CO2) monitoring	5.506.2			✓		
Mandatory	Acoustical control (with exception)	5.507.4			✓		
Mandatory	Exterior noise transmission, prescriptive method (with exceptions)	5.507.4.1			✓		
Mandatory	Noise exposure where noise contours are not readily available	5.507.4.1.1			✓		
Mandatory	Performance method	5.507.4.2			✓		
Mandatory	Site features	5.507.4.2.1			✓		
Mandatory	Documentation of compliance	5.507.4.2.2			✓		
Mandatory	Interior sound transmission (with note)	5.507.4.3	✓				A-0.6
Mandatory	Ozone depletion and greenhouse gas reductions	5.508.1	✓				A-0.6
Mandatory	Chlorofluorocarbons (CFCs)	5.508.1.1	✓				A-0.6, M-0.2
Mandatory	Halons	5.508.1.2	✓				A-0.6
Mandatory	Supermarket refrigerant leak reduction for retail food stores 8,000 square feet or more	5.508.2 through 5.508.2.6.3			✓		
	END OF MANDATORY PROVISIONS						

Documentation Author's / Responsible Designer's Declaration Statement
✓ **Mandatory:** I attest that this mandatory provisions checklist is accurate and complete.

Signature:	[signature]		
Company:	CO-AR DESIGN, INC.	Date:	6/28/2022
Address:	680 BREA CANYON ROAD, STE. 178	License:	C-29168
City/State/Zip:	DIAMOND BAR, CA 91789	Phone:	909-598-0186

A5.602
CALGreen VERIFICATION GUIDELINES MANDATORY MEASURES CHECKLIST
(2019 SUPPLEMENT effective July 1, 2021)

Application: This checklist shall be used for nonresidential projects that meet one of the following: new construction, building additions of 1,000 square feet or greater, or building alterations with a permit valuation of $200,000 or more pursuant to Section 301.3 AND do not trigger a Tier 1 or Tier 2 requirement:

Y = Yes (section has been selected and/or included)
N/A = Not Applicable (code section does not apply to the project—mainly used for additions and alterations)
O = Other (provide explanation)
[N] = New construction pursuant to Section 301.3
[A] = Additions and/or Alterations pursuant to Section 301.3

Chapter 5 Divisions

DIVISION 5.1 Planning and Design

Requirement	SECTION TITLE	CODE SECTION	Y	N	N/A	O	PLAN SHEET, SPEC, OR ATTACH REFERENCE
Mandatory	Storm water pollution prevention for projects that disturb less than 1 acre of land	5.106.1 through 5.106.2			✓		
Mandatory	Short-term bicycle parking (with exception)	5.106.4.1.1			✓		
Mandatory	Long-term bicycle parking	5.106.4.1.2 through 5.106.4.1.5			✓		
Mandatory	Designated parking for clean air vehicles with footnote and note	5.106.5.2			✓		
Mandatory	Parking stall marking	5.106.5.2.1			✓		
Mandatory	Single charging space requirements	5.106.5.3.1			✓		
Mandatory	Multiple charging space requirements [N]	5.106.5.3.2			✓		
Mandatory	EV charging space calculation [N] (with exceptions)	5.106.5.3.3			✓		
Mandatory	[N] Identification	5.106.5.3.4			✓		
Mandatory	[N] Future charging spaces with note	5.106.5.3.5			✓		
Mandatory	Light pollution reduction [N] (with exceptions, notes and table)	5.106.8			✓		
Mandatory	Grading and paving (exception for additions and alterations not altering the drainage path)	5.106.10			✓		

DIVISION 5.2 Energy Efficiency

Requirement	SECTION TITLE	CODE SECTION	Y	N	N/A	O	PLAN SHEET, SPEC, OR ATTACH REFERENCE
Mandatory	Meet the minimum energy efficiency standard	5.201.1	✓				M-0.7, M-0.8, M-0.9 & E-0.2

DIVISION 5.3 Water Efficiency and Conservation

Requirement	SECTION TITLE	CODE SECTION	Y	N	N/A	O	PLAN SHEET, SPEC, OR ATTACH REFERENCE
Mandatory	Separate meters (new buildings or additions > 50,000 sf that consume more than 100 gal/day)	5.303.1.1			✓		
Mandatory	Separate meters (for tenants in new buildings or additions that consume more than 1,000 gal/day)	5.303.1.2			✓		
Mandatory	Water closets shall not exceed 1.28 gallons per flush (gpf)	5.303.3.1	✓				P-0.2
Mandatory	Wall-mounted urinals shall not exceed 0.125 gpf	5.303.3.2.1	✓				P-0.2
Mandatory	Floor-mounted urinals shall not exceed 0.5 gpf	5.303.3.2.2			✓		
Mandatory	Single showerhead shall have maximum flow rate of 1.8 gpm (gallons per minute) at 80 psi	5.303.3.3.1			✓		
Mandatory	Multiple showerheads serving one shower shall have a combined flow rate of 1.8 gpm at 80 psi	5.303.3.3.2			✓		
Mandatory	Nonresidential lavatory faucets	5.303.3.4.1	✓				P-0.2
Mandatory	Kitchen faucets	5.303.3.4.2	✓				P-0.2
Mandatory	Wash fountains	5.303.3.4.3			✓		
Mandatory	Metering faucets	5.303.3.4.4			✓		
Mandatory	Metering faucets for wash fountains	5.303.3.4.5			✓		
Mandatory	Pre-rinse spray valve	5.303.3.4.6	✓				P-0.2
Mandatory	Food waste disposers	5.303.4.1			✓		
Mandatory	Areas of additions or alterations	5.303.5	✓				P-0.2
Mandatory	Standards for plumbing fixtures and fittings	5.303.6	✓				P-0.1
Mandatory	Outdoor potable water use in landscape areas (with notes)	5.304.1			✓		

DIVISION 5.4 Material Conservation and Resource Efficiency

Requirement	SECTION TITLE	CODE SECTION	Y	N	N/A	O	PLAN SHEET, SPEC, OR ATTACH REFERENCE
Mandatory	Weather protection	5.407.1			✓		
Mandatory	Moisture control: sprinklers	5.407.2.1			✓		
Mandatory	Moisture control: exterior door protection	5.407.2.2.1			✓		
Mandatory	Moisture control: flashing	5.407.2.2.2			✓		
Mandatory	Construction waste management—comply with either: Sections 5.408.1.1, 5.408.1.2, 5.408.1.3 or more stringent local ordinance	5.408.1.1, 5.408.1.2, 5.408.1.3	✓				CONTRACTOR TO COMPLY W/ FREMONT'S C & D RECYCLING PROGRAM
Mandatory	Construction waste management: documentation	5.408.1.4	✓				"
Mandatory	Universal waste [A]	5.408.2	✓				"
Mandatory	Excavated soil and land clearing debris (100% reuse or recycle)	5.408.3			✓		

CO-AR DESIGN, INC.
680 Brea Canyon Rd., Ste. 178
Diamond Bar, CA 91789

Office: 909-598-0186
http:\\www.coardesign.com

Dennis J. Lee, Architect
dennisl@coardesign.com

THESE DRAWINGS ARE THE PROPERTY OF THE ARCHITECT. THE DESIGNS SHOWN AND DESCRIBED HERIN INCLUDING ALL TECHNICAL DRAWINGS ARE PROPRIETARY AND CANNOT BE COPIED, DUPLICATED OR COMMERCIALLY EXPLOITED, IN WHOLE OR IN PART. THE DRAWINGS AND SPECIFICATIONS SHALL NOT BE USED BY THE OWNER ON OTHER PROJECTS, FOR ADDITIONS TO THIS PROJECT, OR FOR COMPLETION OF THIS PROJECT BY OTHERS. THE OWNER AGREES TO HOLD HARMLESS, INDEMNIFY AND DEFEND THE ARCHITECT AGAINST ALL DAMAGES, CLAIMS AND LOSSES, INCLUDING DEFENSE COSTS, ARISING OUT OF ANY REUSE OF THE PLANS AND SPECIFICATIONS WITHOUT THE WRITTEN AUTHORIZATION OF THE ARCHITECT OF RECORD.

COPYRIGHT © 2022 CO-AR DESIGN, INC., ALL RIGHTS RESERVED.

SEAL:

LICENSED ARCHITECT
DENNIS JOON HO LEE
C-29168
4/30/2023
RENEWAL DATE
STATE OF CALIFORNIA

NOTES:

PROJECT:
SALTALK FREMONT KITCHEN TENANT IMPROVEMENT

42550 ALBRAE ST.,
FREMONT, CA 94538

CLIENT:

SALTALK, INC.
3334 VICTOR CT.,
SANTA CLARA, CA 95054

SUBMITTALS/ REVISIONS

4	1ST PLANNING SUBMITTAL		2/10/22
5	SD		3/7/22
6	1ST HEALTH SUBMITTAL		4/7/22
7	1ST BLDG SUBMITTAL		4/11/22
8	2ND BLDG SUBMITTAL	△1	7/29/22
9	3RD USD SUBMITTAL	△3	9/12/22
10	2ND HEALTH SUBMITTAL	△4	xx/xx/22
11	3RD BLDG SUBMITTAL	△5	xx/xx/22

PROJECT NO:	202201
SCALE:	AS SHOWN
DATE:	10/4/2022
DRAWN BY:	ED / FW
CHECKED BY:	DL

SHEET TITLE:
CAL GREEN NONRESIDENTIAL CHECKLIST

SHEET NO. △1
A-0.6

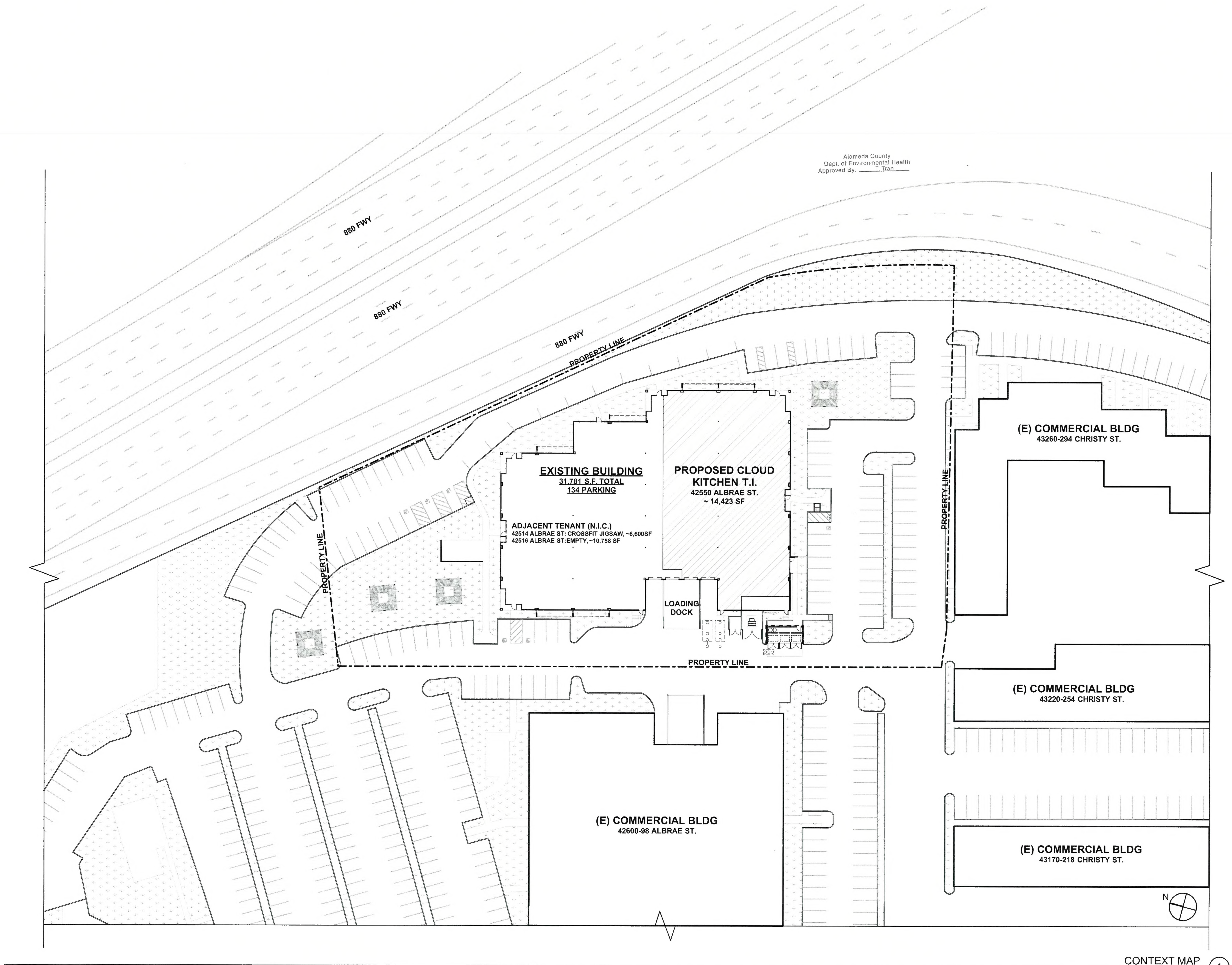

CONTEXT MAP (1)
SCALE: 1" = 30'

CO AR

CO-AR DESIGN, INC.
680 Brea Canyon Rd., Ste. 178
Diamond Bar, CA 91789

Office: 909-598-0186
http:\\www.coardesign.com

Dennis J. Lee, Architect
dennisl@coardesign.com

THESE DRAWINGS ARE THE PROPERTY OF THE ARCHITECT. THE DESIGNS SHOWN AND DESCRIBED HERIN INCLUDING ALL TECHNICAL DRAWINGS ARE PROPRIETARY AND CANNOT BE COPIED, DUPLICATED OR COMMERCIALLY EXPLOITED, IN WHOLE OR IN PART. THE DRAWINGS AND SPECIFICATIONS SHALL NOT BE USED BY THE OWNER ON OTHER PROJECTS, FOR ADDITIONS TO THIS PROJECT, OR FOR COMPLETION OF THIS PROJECT BY OTHERS. THE OWNER AGREES TO HOLD HARMLESS, INDEMNIFY AND DEFEND THE ARCHITECT AGAINST ALL DAMAGES, CLAIMS AND LOSSES, INCLUDING DEFENSE COSTS, ARISING OUT OF ANY REUSE OF THE PLANS AND SPECIFICATIONS WITHOUT THE WRITTEN AUTHORIZATION OF THE ARCHITECT OF RECORD.

COPYRIGHT © 2022 CO-AR DESIGN, INC., ALL RIGHTS RESERVED.

SEAL:

LICENSED ARCHITECT
DENNIS JOON HO LEE
C-29168
4/30/2023
RENEWAL DATE
STATE OF CALIFORNIA

NOTES:

PROJECT:
SALTALK FREMONT KITCHEN TENANT IMPROVEMENT

42550 ALBRAE ST.,
FREMONT, CA 94538

CLIENT:

SALTALK, INC.
3334 VICTOR CT.,
SANTA CLARA, CA 95054

SUBMITTALS/ REVISIONS:

4	1ST PLANNING SUBMITTAL		2/10/22
5	SD		3/7/22
6	1ST HEALTH SUBMITTAL		4/7/22
7	1ST BLDG SUBMITTAL		4/11/22
8	2ND BLDG SUBMITTAL	1	7/29/22
9	3RD USD SUBMITTAL	3	9/12/22
10	2ND HEALTH SUBMITTAL	4	xx/xx/22
11	3RD BLDG SUBMITTAL	5	xx/xx/22

PROJECT NO:	202201
SCALE:	AS SHOWN
DATE:	10/4/2022
DRAWN BY:	ED / FW
CHECKED BY:	DL

SHEET TITLE:
CONTEXT MAP

SHEET NO:
A-1.0

CONSTRUCTION & DEMOLITION NOTES:

1. DURING CONSTRUCTION, ANY DEBRIS TO BE REMOVED FROM THE SITE IN A DEBRIS BOX (DUMPSTER) MUST BE REMOVED BY THE CITY'S ONLY APPROVED HAULER, REPUBLIC SERVICES. NO OTHER ENTITY IS AUTHORIZED TO COLLECT OR TRANSPORT MATERIAL GENERATED WITHIN FREMONT IN A DEBRIS BOX.
2. ALTERNATELY,THE CONSTRUCTION CONTRACTOR MAY REMOVE MATERIALS FROM THE JOBSITE PREMISES, USING THEIR OWN EQUIPMENT, VEHICLES AND EMPLOYEES, AS AN INCIDENTAL PART OF A TOTAL CONSTRUCTION SERVICE OFFERED BY THAT CONTRACTOR. CONTRACTORS WHO SELF-HAUL DEBRIS IN THEIR OWN VEHICLES MUST DELIVER THE MATERIAL TO AN APPROVED RECYCLING FACILITY.
3. PLANT AND TREE DEBRIS MUST BE SEPARATED FROM OTHER WASTE. THE ALAMEDA COUNTY WASTE MANAGEMENT AUTHORITY'S (ACWMA) PLANT DEBRIS LANDFILL BAN ORDINANCE (ACWMA ORD. NO. 2008-01) REQUIRES ALL PLANT AND TREE DEBRIS TO BE SEPARATED AND RECYCLED.
4. DURING DEMOLITION AND CONSTRUCTION, 100% OF THE ASPHALT AND CONCRETE MUST BE REUSED OR RECYCLED, AND 65% OF THE REMAINING DEBRIS GENERATED FROM THE PROJECT MUST BE REUSED OR RECYCLED. TO RECEIVE FINAL PERMIT APPROVAL, APPLICANT MUST SAVE ALL RECEIPTS FROM DISPOSAL AND RECYCLING TO TURN IN AT THE COMPLETION OF THE PROJECT.
5. THE APPLICANT MUST SUBMIT A FREMONT WASTE HANDLING PLAN PRIOR TO BEGINNING ANY CONSTRUCTION. THE WASTE HANDLING PLAN MUST:
   • PROVIDE AN ESTIMATE OF TYPE OF DEBRIS GENERATED
   • LIST THE NAMES OF THE APPROVED RECYCLING FACILITIES THAT WILL BE USED
   • INDICATE THAT 65% OF THE MATERIAL WILL BE RECYCLED
   • BE DISTRIBUTED TO ALL SUBCONTRACTORS ON THE JOB.
   APPLICANT MUST SUBMIT THE WASTE HANDLING PLAN ELECTRONICALLY AT WWW.FREMONT.WASTETRACKING.COM.
6. ALL DISPOSAL AND RECYCLING RECEIPTS MUST OFFICIALLY LIST FREMONT AS THE CITY OF ORIGIN TO BE COUNTED TOWARD THE DIVERSION REQUIREMENT.
7. PRIOR TO SCHEDULING THE FINAL INSPECTION, THE APPLICANT MUST UPLOAD DOCUMENTATION IN THE WWW.FREMONT.WASTETRACKING.COM WEBSITE TO SHOW ACTUAL TONS OF DEBRIS RECYCLED AND LANDFILLED THAT WAS GENERATED FROM THE PROJECT.

SITE PLAN GENERAL NOTES:

1. ACCESSIBLE PATHS OF TRAVEL SHALL HAVE A CONTINUOUS COMMON SURFACE, NOT INTERRUPTED BY STEPS OR BY ABRUPT CHANGES IN LEVEL EXCEEDING 1/2 INCH AND SHALL BE MINIMUM OF 48 INCHES IN WIDTH. IF A WALK OR SIDEWALK HAS LESS THAN 60 INCH CLEAR WIDTH, THEN PASSING SPACES AT LEAST 60 INCHES BY 60 INCHES SHALL BE LOCATED AT REASONABLE INTERVALS NOT TO EXCEED 200 FEET. SURFACE CROSS SLOPES SHALL NOT EXCEED 1/4 INCH PER FOOT. WHEN THE SLOPE IN DIRECTION OF TRAVEL OF ANY WALK EXCEEDS ONE UNIT VERTICAL TO 20 UNITS HORIZONTAL, IT SHALL COMPLY WITH PROVISIONS OF CBC 11B-405 FOR RAMPS.
2. IF A WALK CROSSES OR ADJOINS A VEHICULAR WAY,AND THE WALKING SURFACES ARE NOT SEPARATED BY CURBS, RAILINGS OR OTHER ELEMENTS BETWEEN THE PEDESTRIAN AREA AND THE VEHICULAR AREA, THE BOUNDARY BETWEEN THE AREA SHALL BE DEFINED BY A CONTINUOUS DETECTABLE WARNING WHICH IS 36 INCHES WIDE, COMPLYING WITH CBC 11B-705.1.
3. WALKING SURFACES THAT ARE A PART OF AN ACCESSIBLE ROUTE SHALL COMPLY WITH CBC SECTION 11B-403.
4. FLOOR OR GROUND SURFACES SHALL COMPLY WITH CBC SECTION 11B-302.
5. THE RUNNING SLOPE OF WALKING SURFACES SHALL NOT BE STEEPER THAN 1:20. THE CROSS SLOPE OF WALKING SURFACES SHALL NOT BE STEEPER THAN 1:48.

SITE PLAN LEGEND:

ACCESSIBLE PATH OF TRAVEL (DOES NOT EXCEED 5% IN THE DIRECTION OF TRAVEL AND 2% CROSS SLOPE), SEE SITE PLAN NOTES ABOVE

SITE PLAN KEYNOTE:

01	(E) PARALLEL CURB RAMP, 1:12 SLOPE MAX
02	(E) RAMP, 1:12 SLOPE MAX
03	(E) STRIPING ACCESS AISLE @ 36" O.C. MAX
04	(E) VAN ACCESSIBLE PARKING SPACE
05	(E) VAN ACCESSIBLE PARKING SIGN POST
06	(E) ACCESSIBLE PARKING SPACE
07	(E) ACCESSIBLE PARKING SIGN POST
08	(E) INTERNATIONAL SYMBOL OF ACCESSIBILITY 36"x36" MIN
09	(E) TRASH ENCLOSURE
10	(E) POWER TRANSMISSION TOWER
11	(E) TRANSFORMER
12	(E) GAS METER
13	(N) 750 GAL GREASE INTERCEPTOR
14	(N) 5,000 GAL GREASE INTERCEPTOR
15	(N) GAS METER BANK

Alameda County
Dept. of Environmental Health
Approved By: T. Tran

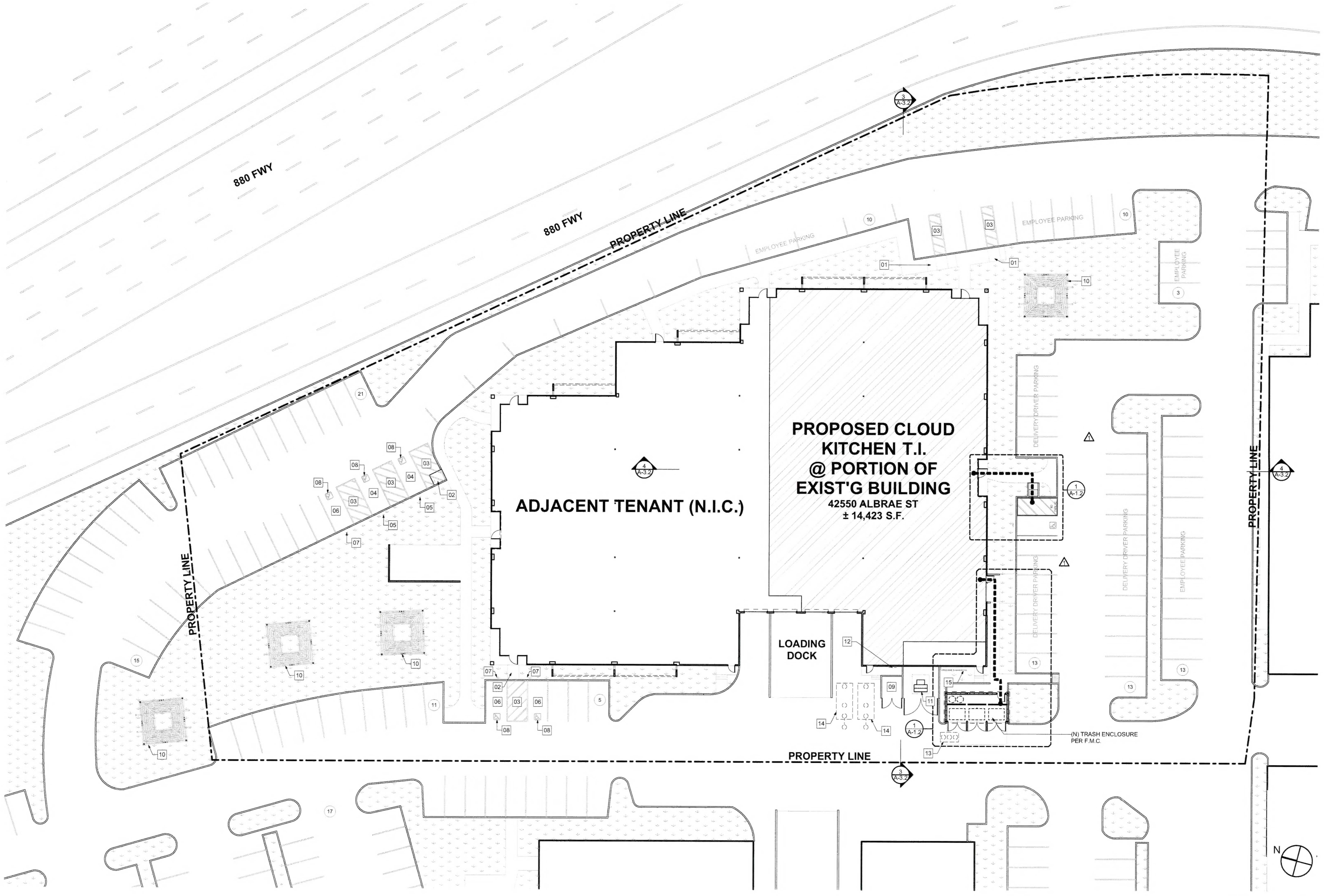

SITE PLAN 1
SCALE: 1" = 20'

CO-AR DESIGN, INC.
680 Brea Canyon Rd., Ste. 178
Diamond Bar, CA 91789

Office: 909-598-0186
http:\\www.coardesign.com

Dennis J. Lee, Architect
dennisl@coardesign.com

THESE DRAWINGS ARE THE PROPERTY OF THE ARCHITECT. THE DESIGNS SHOWN AND DESCRIBED HERIN INCLUDING ALL TECHNICAL DRAWINGS ARE PROPRIETARY AND CANNOT BE COPIED, DUPLICATED OR COMMERCIALLY EXPLOITED, IN WHOLE OR IN PART. THE DRAWINGS AND SPECIFICATIONS SHALL NOT BE USED BY THE OWNER ON OTHER PROJECTS, FOR ADDITIONS TO THIS PROJECT, OR FOR COMPLETION OF THIS PROJECT BY OTHERS. THE OWNER AGREES TO HOLD HARMLESS, INDEMNIFY AND DEFEND THE ARCHITECT AGAINST ALL DAMAGES, CLAIMS AND LOSSES, INCLUDING DEFENSE COSTS, ARISING OUT OF ANY REUSE OF THE PLANS AND SPECIFICATIONS WITHOUT THE WRITTEN AUTHORIZATION OF THE ARCHITECT OF RECORD.

COPYRIGHT © 2022 CO-AR DESIGN, INC., ALL RIGHTS RESERVED.

SEAL:
LICENSED ARCHITECT
DENNIS JOON HO LEE
C-29168
4/30/2023
RENEWAL DATE
STATE OF CALIFORNIA

NOTES:

PROJECT:
SALTALK FREMONT KITCHEN TENANT IMPROVEMENT

42550 ALBRAE ST.,
FREMONT, CA 94538

CLIENT:
SALTALK, INC.
3334 VICTOR CT.,
SANTA CLARA, CA 95054

SUBMITTALS/ REVISIONS:

4	1ST PLANNING SUBMITTAL		2/10/22
5	SD		3/7/22
6	1ST HEALTH SUBMITTAL		4/7/22
7	1ST BLDG SUBMITTAL		4/11/22
8	2ND BLDG SUBMITTAL	1	7/29/22
9	3RD USD SUBMITTAL	3	9/12/22
10	2ND HEALTH SUBMITTAL	4	xx/xx/22
11	3RD BLDG SUBMITTAL	5	xx/xx/22

PROJECT NO:	202201
SCALE:	AS SHOWN
DATE:	10/4/2022
DRAWN BY:	ED / FW
CHECKED BY:	DL

SHEET TITLE:
SITE PLAN

SHEET NO:
A-1.1

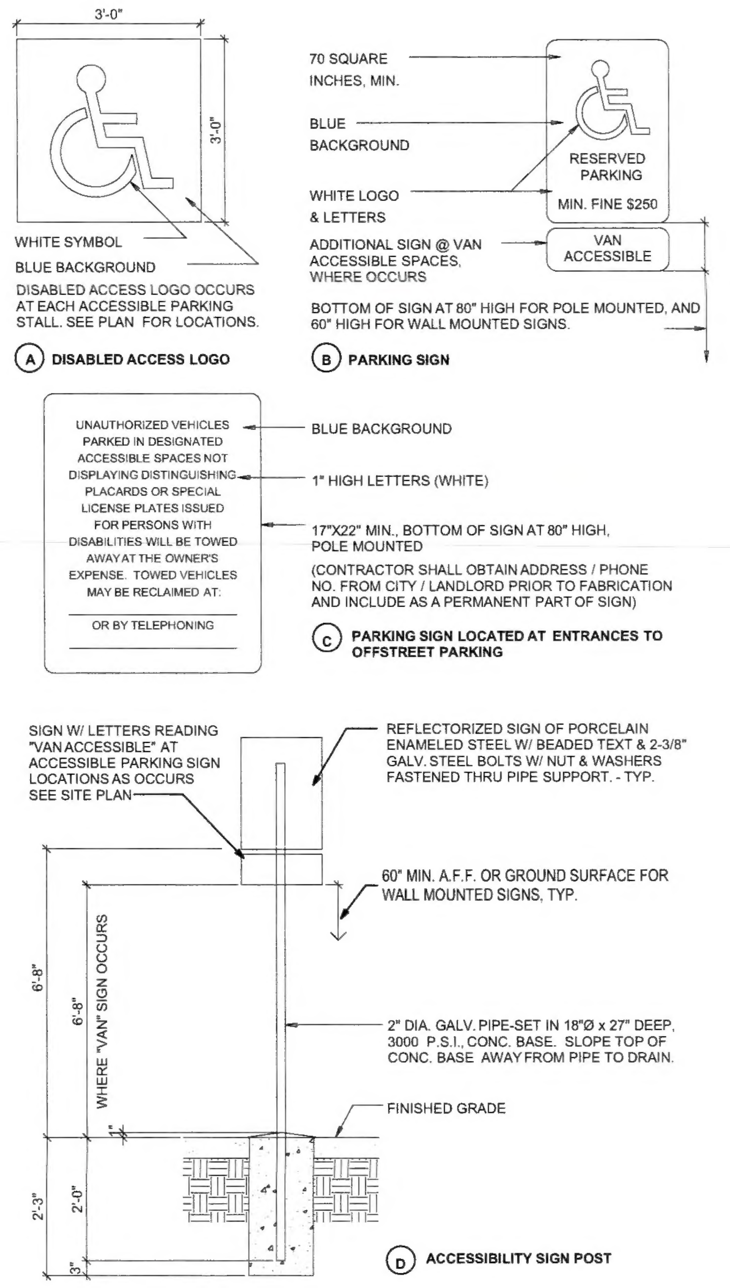

ACCESSIBLE PARKING, SIGN & POST 11
SCALE: 1/2" = 1'-0"

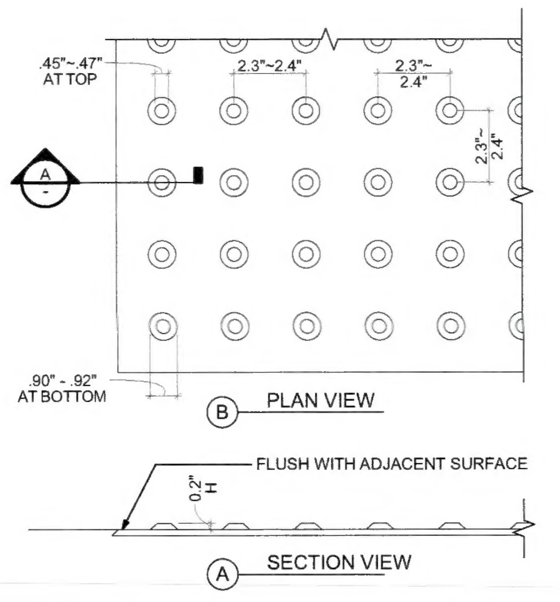

DETECTABLE WARNING 10
SCALE: 3" = 1'-0"

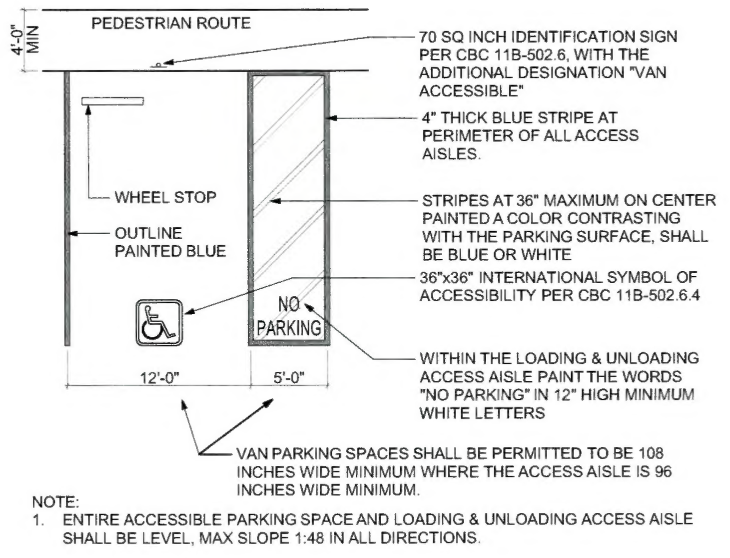

VAN ACCESSIBLE PARKING SPACE 9
SCALE: 1/8" = 1'-0"

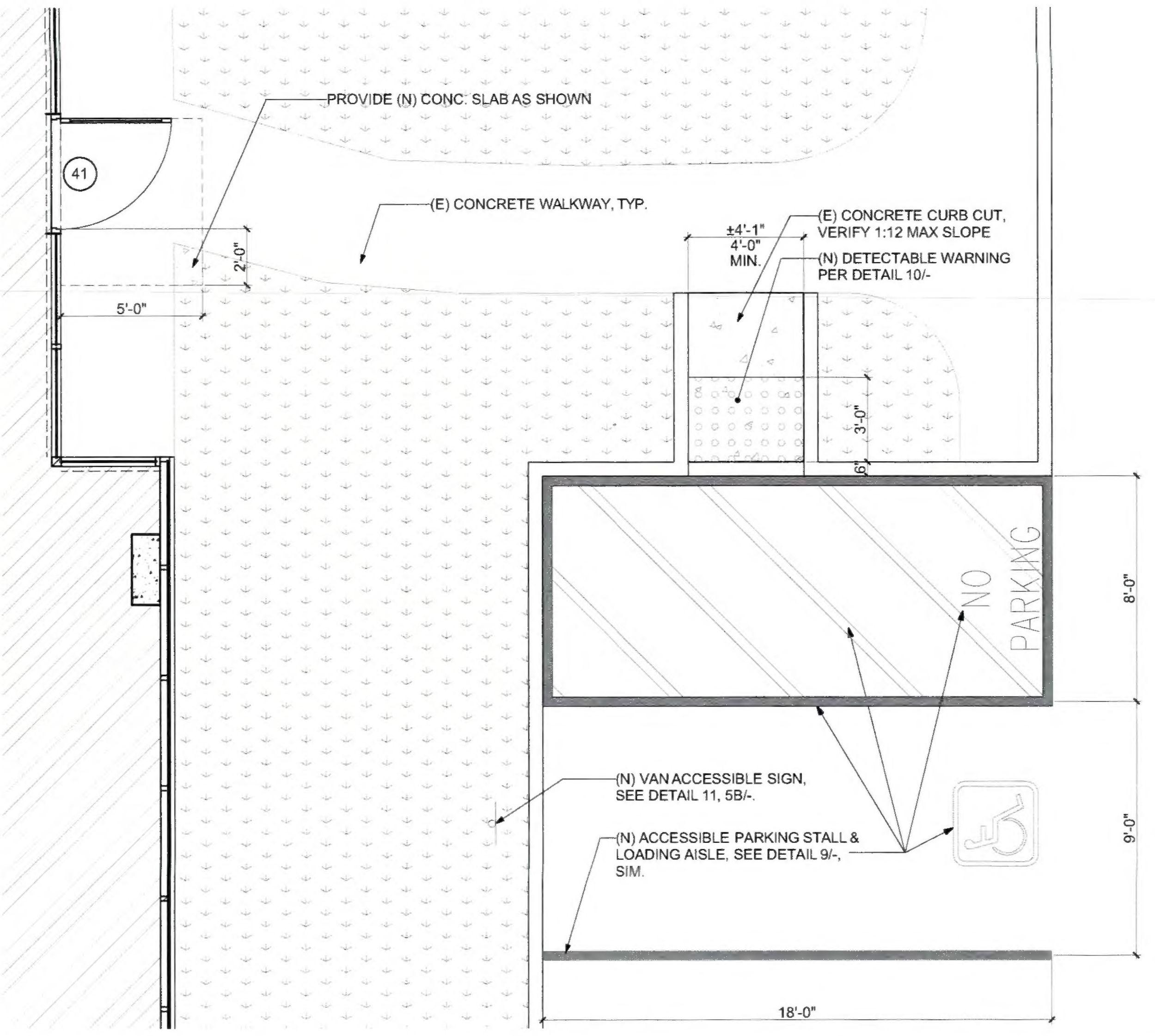

PARTIAL SITE PLAN 8
SCALE: 1/4" = 1'-0"

GATE NOTES:

A. ALL ENCLOSURES MUST HAVE SOLID METAL GATES WITH LATCHES AND BE SECURED IN BOTH THE OPEN/CLOSED POSITIONS WITH CANE BOLTS. LATCH SHALL BE NO HIGHER THAN 5 FEET.

B. GATES SHALL BE HINGED ON THE OUTSIDE AND MUST BE FLUSH WITH THE ENCLOSURE WALL TO ALLOW ADEQUATE MANEUVERABILITY OF THE RECEPTACLES IN AND OUT OF THE ENCLOSURE.

C. DOUBLE GATES ARE REQUIRED FOR ALL ENCLOSURES.

D. ALL GATES MUST BE LOCKABLE USING A STANDARD PADLOCK.

E. GATES TO THE TRASH ENCLOSURE SHOULD OPEN TO 120 DEGREES.

G. A SMALLER PERSONNEL ACCESS DOOR SHOULD BE INSTALLED TO FACILITATE EASE OF USE.

H. THE GATES SHOULD BE CAPABLE OF BEING LATCHED OPEN SO THAT AN 8-FOOT WIDE TRUCK CAN ACCESS THE ENCLOSURE.

Alameda County
Dept. of Environmental Health
Approved By: T Tran

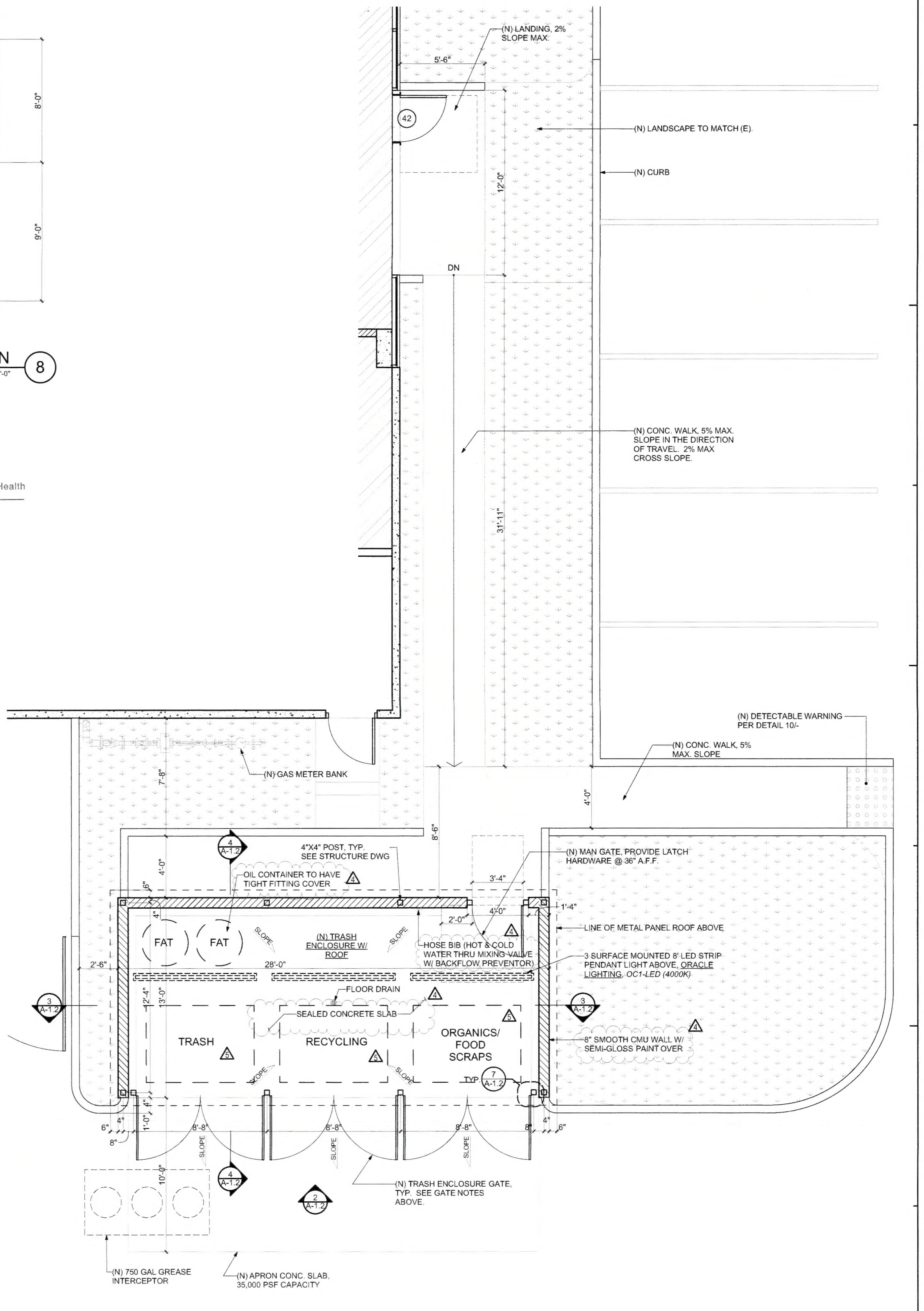

TRASH ENCLOSURE ENL. PLAN 1
SCALE: 1/4" = 1'-0"

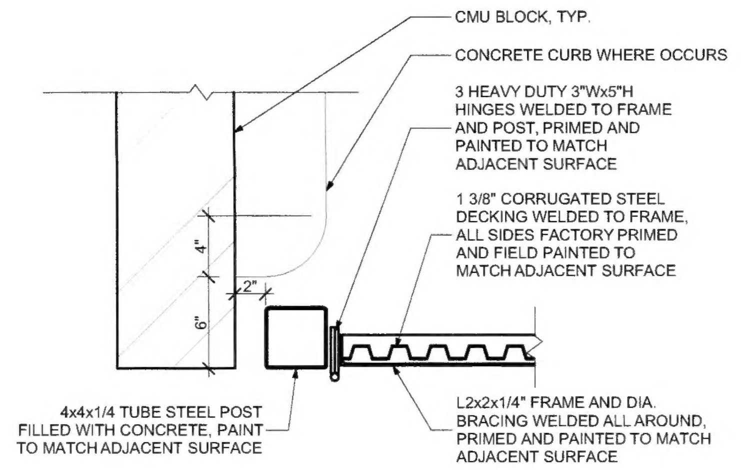

TRASH ENCLOSURE - DOOR 7
SCALE: 1 1/2" = 1'-0"

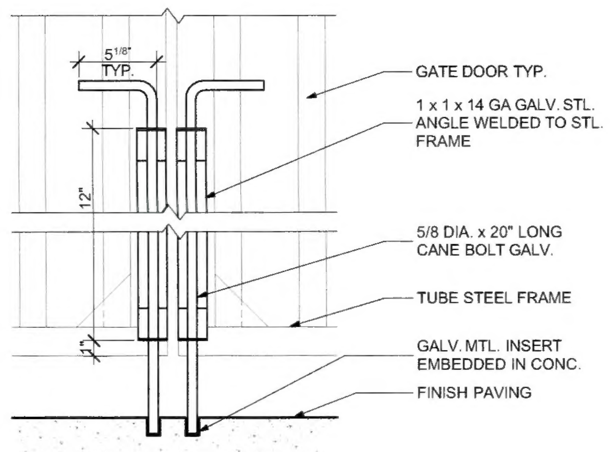

TRASH ENCLOSURE - CANE DETAIL 6
SCALE: 1 1/2" = 1'-0"

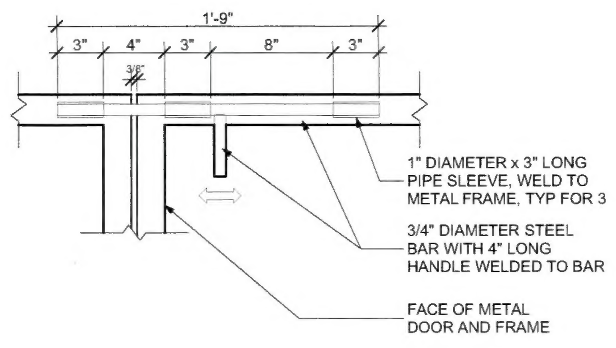

SLIDING BAR LATCH 5
SCALE: 1 1/2" = 1'-0"

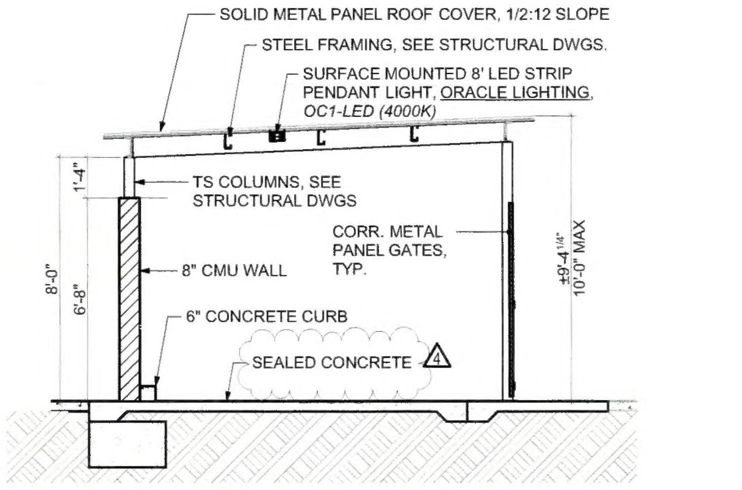

TRASH ENCLOSURE SECTION 4
SCALE: 1/4" = 1'-0"

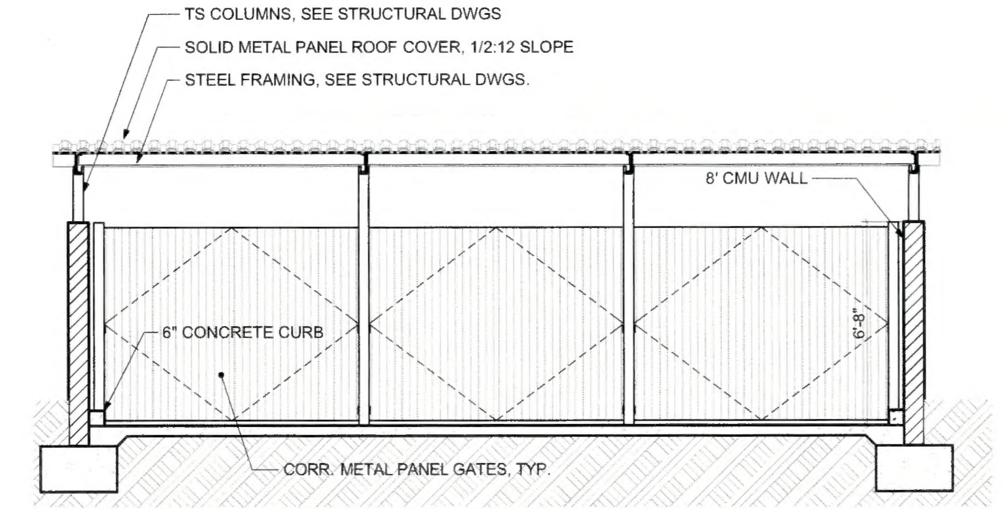

TRASH ENCLOSURE SECTION 3
SCALE: 1/4" = 1'-0"

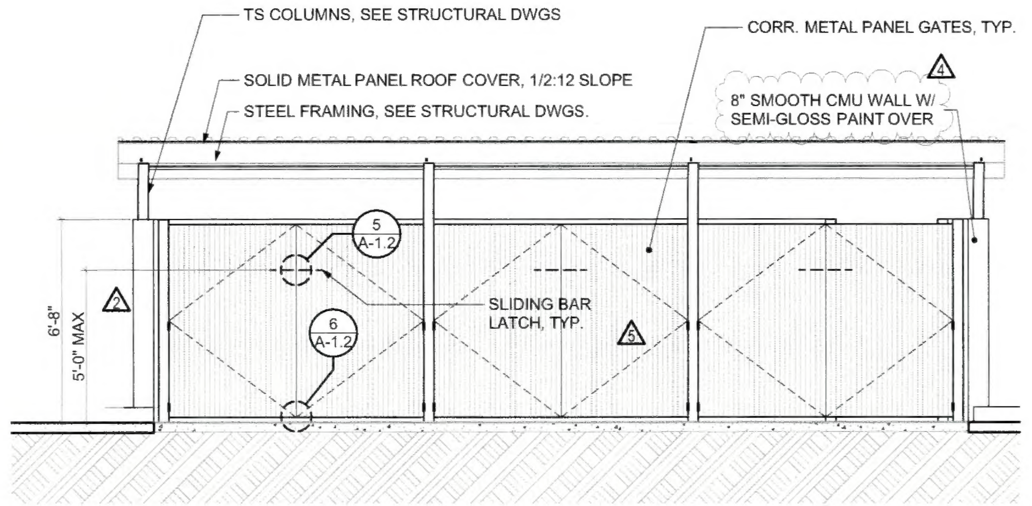

TRASH ENCLOSURE ELEVATION 2
SCALE: 1/4" = 1'-0"

CO-AR DESIGN, INC.
680 Brea Canyon Rd., Ste. 178
Diamond Bar, CA 91789

Office: 909-598-0186
http:\\www.coardesign.com

Dennis J. Lee, Architect
dennisl@coardesign.com

THESE DRAWINGS ARE THE PROPERTY OF THE ARCHITECT. THE DESIGNS SHOWN AND DESCRIBED HERIN INCLUDING ALL TECHNICAL DRAWINGS ARE PROPRIETARY AND CANNOT BE COPIED, DUPLICATED OR COMMERCIALLY EXPLOITED, IN WHOLE OR IN PART. THE DRAWINGS AND SPECIFICATIONS SHALL NOT BE USED BY THE OWNER ON OTHER PROJECTS, FOR ADDITIONS TO THIS PROJECT, OR FOR COMPLETION OF THIS PROJECT BY OTHERS. THE OWNER AGREES TO HOLD HARMLESS, INDEMNIFY AND DEFEND THE ARCHITECT AGAINST ALL DAMAGES, CLAIMS AND LOSSES, INCLUDING DEFENSE COSTS, ARISING OUT OF ANY REUSE OF THE PLANS AND SPECIFICATIONS WITHOUT THE WRITTEN AUTHORIZATION OF THE ARCHITECT OF RECORD.

COPYRIGHT © 2022 CO-AR DESIGN, INC., ALL RIGHTS RESERVED.

SEAL: LICENSED ARCHITECT — DENNIS JOON HO LEE — C-29168 — 4/30/2023 RENEWAL DATE — STATE OF CALIFORNIA

NOTES:

PROJECT:
SALTALK FREMONT KITCHEN TENANT IMPROVEMENT

42550 ALBRAE ST.,
FREMONT, CA 94538

CLIENT:
SALTALK, INC.
3334 VICTOR CT.,
SANTA CLARA, CA 95054

SUBMITTALS/ REVISIONS:

4	1ST PLANNING SUBMITTAL		2/10/22
5	SD		3/7/22
6	1ST HEALTH SUBMITTAL		4/7/22
7	1ST BLDG SUBMITTAL		4/11/22
8	2ND BLDG SUBMITTAL	1	7/29/22
9	3RD USD SUBMITTAL	3	9/12/22
10	2ND HEALTH SUBMITTAL	4	xx/xx/22
11	3RD BLDG SUBMITTAL	5	xx/xx/22

PROJECT NO.	202201
SCALE	AS SHOWN
DATE	10/4/2022
DRAWN BY:	ED / FW
CHECKED BY:	DL

SHEET TITLE:
ENLARGED SITE PLAN

SHEET NO:
A-1.2

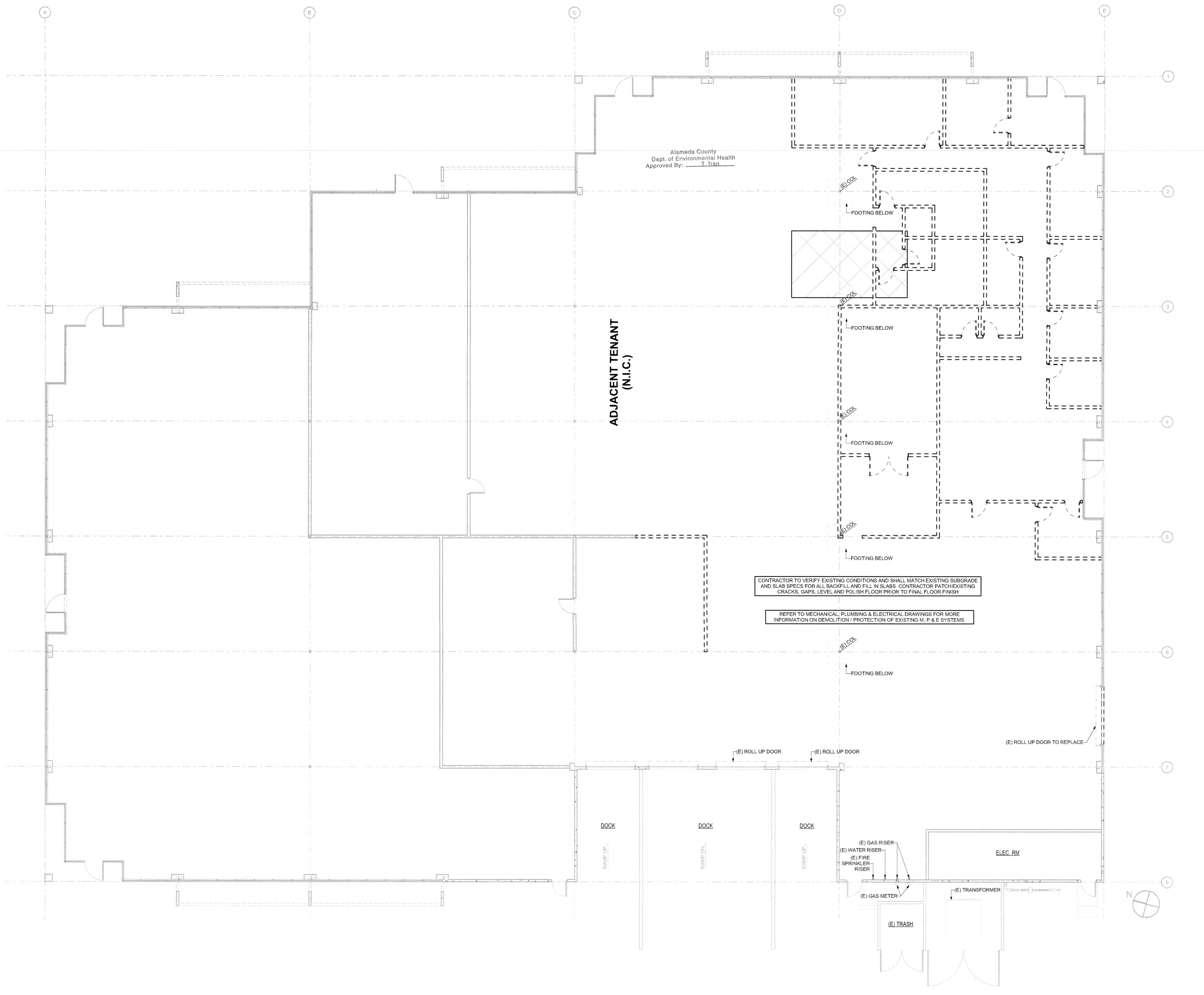

EXISTING / DEMO PLAN (1)
SCALE: 1/8" = 1'-0"

DEMOLITION GENERAL NOTES:

1. THIS PLAN SHOWS GENERAL DEMOLITION WORK TO BE PERFORMED AND DOES NOT RELIEVE THE CONTRACTOR FROM OTHER DEMOLITION WORK REQUIRED TO PRODUCE THE BUILDING MODIFICATIONS SHOWN ON REMAINING CONTRACT DOCUMENTS, INCLUDING MECHANICAL, ELECTRICAL, PLUMBING AND REFRIGERATION DRAWINGS.
2. FOR MECHANICAL, ELECTRICAL AND HVAC EQUIPMENT TO BE REMOVED, SEE RELATED DRAWINGS.
3. CONTRACTOR DEMOLISHED ITEMS SHALL BE DISPOSED OF PROPERLY OFF-SITE AND IN AN EXPEDITIOUS MANNER.
4. PROTECT ALL EXISTING EQUIPMENT SHOWN TO REMAIN FROM DAMAGE DURING CONSTRUCTION.
5. METHOD AND SEQUENCE OF DEMOLITION OPERATIONS ARE SUBJECT TO APPROVAL BY OWNER.
6. BEFORE REMOVAL OF EXTERIOR DOORS AND INSTALLATION OF NEW, PROVIDE BARRICADE FOR SECURITY.
7. STEAM CLEAN FLOOR OF ALL DEBRIS AND DUST AFTER REMOVAL OF EXISTING FLOOR TILE, AND PATCHAND PREP FLOOR TO RECEIVE NEW TILE.
8. PATCHALL HOLES ON INTERIOR FACE OF REMAINING WALL THAT WILL BE VISIBLE AFTER INTERIOR REMODELING.
9. ALL MECHANICAL, ELECTRICAL, PLUMBING ETC. WHICH HAS BEEN ABANDONED SHALL BE CAPPED OR REMOVED AS REQUIRED BELOW FLOOR.
10. REFER TO ASBESTOS STUDY FOR AREAS SUBJECT TO APPROPRIATE DISPOSAL METHODS.
11. DEMO EXISTING T-BAR, ACOUSTICAL CEILING, LIGHTING, BATT INSULATION AND SUSPENDED WOOD GRID ABOVE THE MAIN SALES FLOOR, VERIFY EXTENT OF DEMOLITION WITH OWNER REPRESENTATIVE.

DEMO PLAN LEGEND:

EXISTING CONC. WALL / COLUMN TO REMAIN

EXISTING INTERIOR WALL TO REMAIN

EXISTING WALL TO BE DEMOLISHED

SLAB BREAKOUT AREA FOR WALK-IN FREEZER

CO AR

CO-AR DESIGN, INC.
680 Brea Canyon Rd., Ste. 178
Diamond Bar, CA 91789

Office: 909-598-0186
http:\\www.coardesign.com

Dennis J. Lee, Architect
dennisl@coardesign.com

THESE DRAWINGS ARE THE PROPERTY OF THE ARCHITECT. THE DESIGNS SHOWN AND DESCRIBED HERIN INCLUDING ALL TECHNICAL DRAWINGS ARE PROPRIETARY AND CANNOT BE COPIED, DUPLICATED OR COMMERCIALLY EXPLOITED, IN WHOLE OR IN PART. THE DRAWINGS AND SPECIFICATIONS SHALL NOT BE USED BY THE OWNER ON OTHER PROJECTS, FOR ADDITIONS TO THIS PROJECT, OR FOR COMPLETION OF THIS PROJECT BY OTHERS. THE OWNER AGREES TO HOLD HARMLESS, INDEMNIFY AND DEFEND THE ARCHITECT AGAINST ALL DAMAGES, CLAIMS AND LOSSES, INCLUDING DEFENSE COSTS, ARISING OUT OF ANY REUSE OF THE PLANS AND SPECIFICATIONS WITHOUT THE WRITTEN AUTHORIZATION OF THE ARCHITECT OF RECORD.

COPYRIGHT © 2022 CO-AR DESIGN, INC., ALL RIGHTS RESERVED.

SEAL:

LICENSED ARCHITECT
DENNIS JOON HO LEE
C-29168
4/30/2023
RENEWAL DATE
STATE OF CALIFORNIA

NOTES:

PROJECT:

SALTALK FREMONT KITCHEN TENANT IMPROVEMENT

42550 ALBRAE ST.,
FREMONT, CA 94538

CLIENT:

SALTALK, INC.
3334 VICTOR CT.,
SANTA CLARA, CA 95054

SUBMITTALS/ REVISIONS:

4	1ST PLANNING SUBMITTAL		2/10/22
5	SD		3/7/22
6	1ST HEALTH SUBMITTAL		4/7/22
7	1ST BLDG SUBMITTAL		4/11/22
8	2ND BLDG SUBMITTAL	1	7/29/22
9	3RD USD SUBMITTAL	3	9/12/22
10	2ND HEALTH SUBMITTAL	4	xx/xx/22
11	3RD BLDG SUBMITTAL	5	xx/xx/22

PROJECT NO:	202201
SCALE:	AS SHOWN
DATE:	10/4/2022
DRAWN BY:	ED / FW
CHECKED BY:	DL

SHEET TITLE:

EXISTING / DEMO PLAN

SHEET NO:

A-2.1

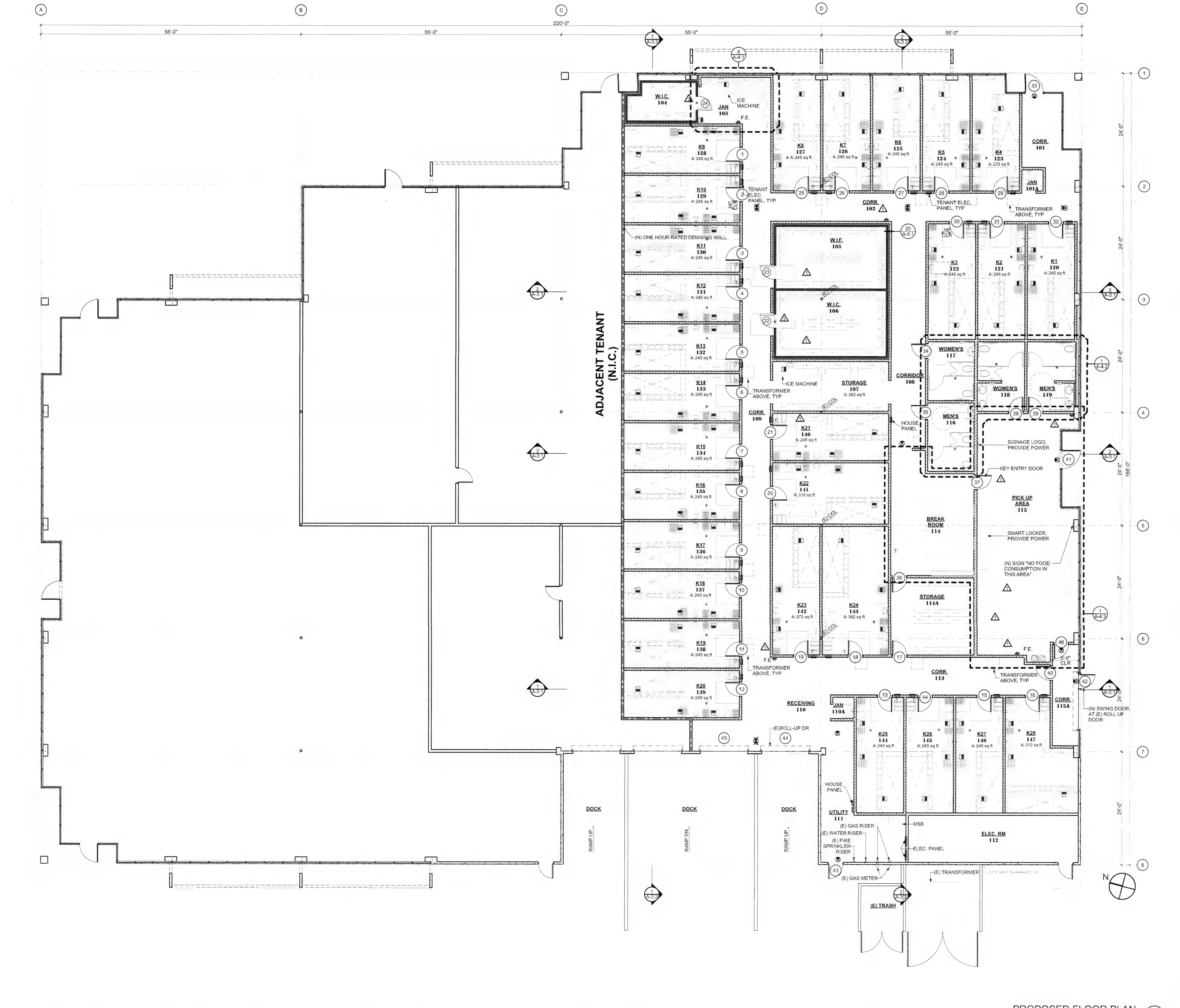

PROPOSED FLOOR PLAN 1
SCALE: 1/8" = 1'-0"

Alameda County
Dept. of Environmental Health
Approved By: T. Tran

GENERAL NOTES:

1. REFER TO MECHANICAL, PLUMBING, ELECTRICAL PLANS FOR ADDITIONAL INFORMATION. REFER TO REFLECTED CEILING PLANS FOR LOCATIONS OF LIGHT FIXTURES.
2. VERIFY EXISTING BUILDING DIMENSIONS AND ELEVATIONS IN THE FIELD AND NOTIFY ARCHITECT OF ANY MAJOR DISCREPANCIES PRIOR TO STARTING WORK.
3. PROVIDE FIRE RETARDANT WOOD BLOCKING AS REQUIRED FOR (N) WALL HUNG SHELVING, MILLWORK.
4. CONTRACTOR TO VERIFY IN FIELD REQUIRED RATINGS @ (E) DEMISING WALLS AND CEILINGS AND PROVIDE (N) GYPSUM BOARD AND/OR FURRING NECESSARY TO ACHIEVE REQUIRED RATING.
5. CONTRACTOR SHALL SUBMIT MILLWORK SHOP DRAWINGS FOR ARCHITECT'S APPROVAL PRIOR TO CONSTRUCTION.
6. CONTRACTOR TO VERIFY (V.I.F.)EXISTING SLAB AND PROVIDE FLOOR LEVELING AS REQUIRED TO INSURE THAT ALL FLOORS ARE SMOOTH, LEVEL AND FLUSH.
7. CONTRACTOR TO REMOVE GYPSUM BOARD AT EXISTING PARTITION WALLS WHERE REQUIRED TO INSTALL ELECTRICAL CONDUIT OR BLOCKING. CONTRACTORS TO PATCH WALLS AND PAINT WALLS.
8. SEE SHEET A-5 FOR SUSPENDED CEILING NOTES AND PROPER METHOD OF INSTALLATION OF CEILING GRID AND SUSPENDED LIGHT FIXTURES
9. CONTRACTOR TO RECONFIGURE (E) FIRE SPRINKLER PLAN TO CONFORM TO THE NEW PLAN LAYOUT. CONTRACTOR TO CENTER HEADS IN INDIVIDUAL CEILING TILES AND PROVIDE POLISHED CHROME ESCUTHEON PLATES. CONTRACTOR TO ADJUST HEAD HEIGHTS TO THE NEW CEILING HEIGHTS. CONTRACTOR TO PROVIDE SHOP DRAWINGS TO THE ARCHITECT FOR APPROVAL AND OBTAIN A PERMIT FROM THE FIRE DEPARTMENT.
10. LIGHTED EXIT SIGNS / EXIT DIRECTIONAL SIGNS SHALL HAVE BATTERY BACK-UP POWER, AND SHALL BE ON SEPARATE CIRCUIT & INDEPENDENTLY CONTROLLED.

FLOOR PLAN LEGEND:

- EXISTING CONC. WALL / COLUMN TO REMAIN
- EXISTING INTERIOR WALL TO REMAIN
- (N) ONE HOUR RATED DEMISING WALL, METAL STUDS @ 16" O.C. W/ 5/8" TYPE 'X' GYPSUM BOARD ON BOTH SIDES, UL DESIGN NO. U465, SEE A-5.3 & 5/S-5.2. FOR MORE INFORMATION. SEE 6 & 15/A-5.2 FOR HEAD OF WALL DETAIL. (5)
- (N) INTERIOR WALL, TYP. METAL STUDS @ 16" O.C., W/ 5/8" GYPSUM BOARD ON BOTH SIDES. SEE 5/S-5.2. FOR MORE INFORMATION. (1)
- (N) W.I.C. / W.I.F. PANELS
- EXIT SIGN W/ 90 MIN. BATTERY BACKUP, SEE ELEC. DWGS FOR MORE INFO.
- FLOOR SINKS AT THE COOKLINE, UNDER THE FOOD PREPARATION AND 3-COMP SINKS SHALL BE MOUNTED FLUSH TO THE FINISHED FLOOR AND EASILY ACCESSIBLE FOR REGULAR CLEANING (E.Q. HALF IN HALF OUT UNDER THE EQUIPMENT) (4)
- FLOOR DRAIN W/ 4'-0"x4'-0" DEPRESSION AROUND (1)
- F.E. FIRE EXTINGUISHER PER CFC 906 / CCR TITLE 19, DIVISION 1, CH. 3
- THERMOSTAT, SEE MECH DWGS.

CO-AR DESIGN, INC.
680 Brea Canyon Rd., Ste. 178
Diamond Bar, CA 91789

Office: 909-598-0186
http:\\www.coardesign.com

Dennis J. Lee, Architect
dennisl@coardesign.com

THESE DRAWINGS ARE THE PROPERTY OF THE ARCHITECT. THE DESIGNS SHOWN AND DESCRIBED HERIN INCLUDING ALL TECHNICAL DRAWINGS ARE PROPRIETARY AND CANNOT BE COPIED, DUPLICATED OR COMMERCIALLY EXPLOITED, IN WHOLE OR IN PART. THE DRAWINGS AND SPECIFICATIONS SHALL NOT BE USED BY THE OWNER ON OTHER PROJECTS, FOR ADDITIONS TO THIS PROJECT, OR FOR COMPLETION OF THIS PROJECT BY OTHERS. THE OWNER AGREES TO HOLD HARMLESS, INDEMNIFY AND DEFEND THE ARCHITECT AGAINST ALL DAMAGES, CLAIMS AND LOSSES, INCLUDING DEFENSE COSTS, ARISING OUT OF ANY REUSE OF THE PLANS AND SPECIFICATIONS WITHOUT THE WRITTEN AUTHORIZATION OF THE ARCHITECT OF RECORD

COPYRIGHT © 2022 CO-AR DESIGN, INC., ALL RIGHTS RESERVED

SEAL

LICENSED ARCHITECT
DENNIS JOON HO LEE
C-29168
4/30/2023
RENEWAL DATE
STATE OF CALIFORNIA

NOTES

PROJECT
SALTALK FREMONT KITCHEN TENANT IMPROVEMENT

42550 ALBRAE ST.,
FREMONT, CA 94538

CLIENT
SALTALK, INC.
3334 VICTOR CT.,
SANTA CLARA, CA 95054

SUBMITTALS/ REVISIONS

4	1ST PLANNING SUBMITTAL		2/10/22
5	SD		3/7/22
6	1ST HEALTH SUBMITTAL		4/7/22
7	1ST BLDG SUBMITTAL		4/11/22
8	2ND BLDG SUBMITTAL	1	7/29/22
9	3RD USD SUBMITTAL	3	9/12/22
10	2ND HEALTH SUBMITTAL	4	xx/xx/22
11	3RD BLDG SUBMITTAL	5	xx/xx/22

PROJECT NO	202201
SCALE	AS SHOWN
DATE	10/4/2022
DRAWN BY	ED / FW
CHECKED BY	DL

SHEET TITLE
PROPOSED FLOOR PLAN

SHEET NO
A-2.2

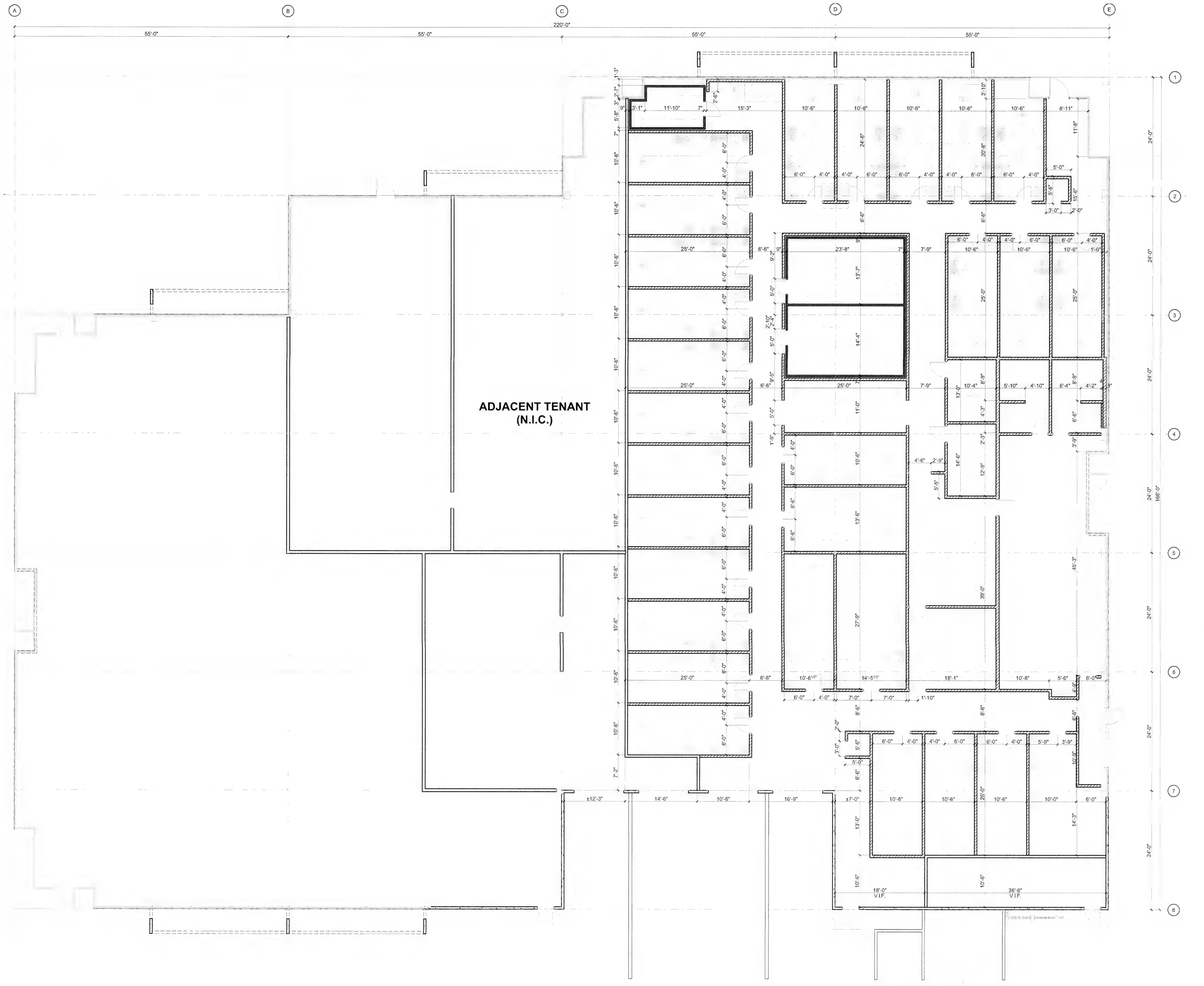

FRAMING & DIMENSION PLAN (1)
SCALE: 1/8" = 1'-0"

FRAMING & DIMENSION PLAN NOTES:

1. ALL DIMENSION IS TO FACE OF METAL STUDS, U.N.O.
2. WORKING POOINT AT PERIMETER WALL IS FROM FACE OF WALL, U.N.O.
3. GENERAL CONTRATOR TO FIELD VERIFY ALL DIMENSIONS AND NOTIFY OWNER'S REP OF ANY DISCRIPENCES BEFORE START WORK.
4. FOR EQUIPMENT FLOOR SINK REFER TO REFRIGERATION DRAWINGS.
5. REFER TO ENLARGE PLAN FOR LOCATIONS OF FLOOR SINKS AND FLOOR DRAINS.

FLOOR PLAN LEGEND:

- EXISTING CONC. WALL / COLUMN TO REMAIN
- EXISTING INTERIOR WALL TO REMAIN
- (N) ONE HOUR RATED DEMISING WALL, METAL STUDS @ 16" O.C. W/ 5/8" TYPE 'X' GYPSUM BOARD ON BOTH SIDES, UL DESIGN NO. U465, SEE A-5.3 & 5/S-5.2. FOR MORE INFORMATION. SEE 6 & 15/A-5.2 FOR HEAD OF WALL DETAIL.
- (N) INTERIOR WALL, TYP. METAL STUDS @ 16" O.C., W/ 5/8" GYPSUM BOARD ON BOTH SIDES. SEE 5/S-5.2. FOR MORE INFORMATION.
- (N) W.I.C. / W.I.F. PANELS

Alameda County
Dept. of Environmental Health
Approved By: T. Tran

CO AR

CO-AR DESIGN, INC.
680 Brea Canyon Rd., Ste. 178
Diamond Bar, CA 91789

Office: 909-598-0186
http:\\www.coardesign.com

Dennis J. Lee, Architect
dennisl@coardesign.com

THESE DRAWINGS ARE THE PROPERTY OF THE ARCHITECT. THE DESIGNS SHOWN AND DESCRIBED HERIN INCLUDING ALL TECHNICAL DRAWINGS ARE PROPRIETARY AND CANNOT BE COPIED, DUPLICATED OR COMMERCIALLY EXPLOITED, IN WHOLE OR IN PART. THE DRAWINGS AND SPECIFICATIONS SHALL NOT BE USED BY THE OWNER ON OTHER PROJECTS, FOR ADDITIONS TO THIS PROJECT, OR FOR COMPLETION OF THIS PROJECT BY OTHERS. THE OWNER AGREES TO HOLD HARMLESS, INDEMNIFY AND DEFEND THE ARCHITECT AGAINST ALL DAMAGES, CLAIMS AND LOSSES, INCLUDING DEFENSE COSTS, ARISING OUT OF ANY REUSE OF THE PLANS AND SPECIFICATIONS WITHOUT THE WRITTEN AUTHORIZATION OF THE ARCHITECT OF RECORD

COPYRIGHT © 2022 CO AR DESIGN, INC., ALL RIGHTS RESERVED

SEAL

LICENSED ARCHITECT
DENNIS JOON HO LEE
C-29168
4/30/2023
RENEWAL DATE
STATE OF CALIFORNIA

NOTES

PROJECT

SALTALK FREMONT KITCHEN TENANT IMPROVEMENT

42550 ALBRAE ST.,
FREMONT, CA 94538

CLIENT

SALTALK, INC.
3334 VICTOR CT.,
SANTA CLARA, CA 95054

SUBMITTALS/ REVISIONS

4	1ST PLANNING SUBMITTAL		2/10/22
5	SD		3/7/22
6	1ST HEALTH SUBMITTAL		4/7/22
7	1ST BLDG SUBMITTAL		4/11/22
8	2ND BLDG SUBMITTAL	1	7/29/22
9	3RD USD SUBMITTAL	3	9/12/22
10	2ND HEALTH SUBMITTAL	4	xx/xx/22
11	3RD BLDG SUBMITTAL	5	xx/xx/22

PROJECT NO	202201
SCALE	AS SHOWN
DATE	10/4/2022
DRAWN BY	ED / FW
CHECKED BY	DL

SHEET TITLE

FRAMING & DIMENSION PLAN

SHEET NO

A-2.2A

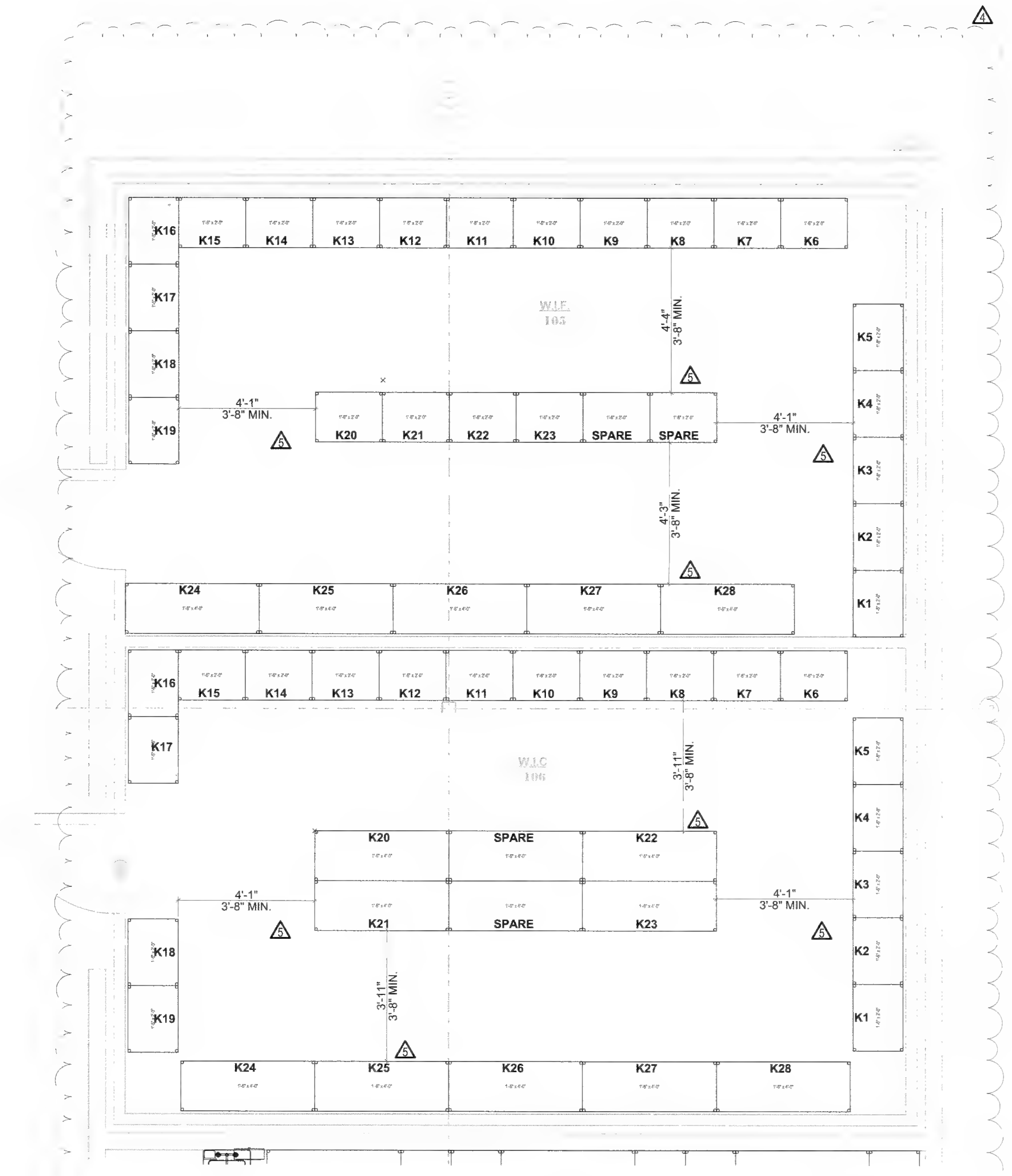

W.I.C. / W.I.F. ASSIGNED SHELVING (2)

SCALE: 3/8" = 1'-0"

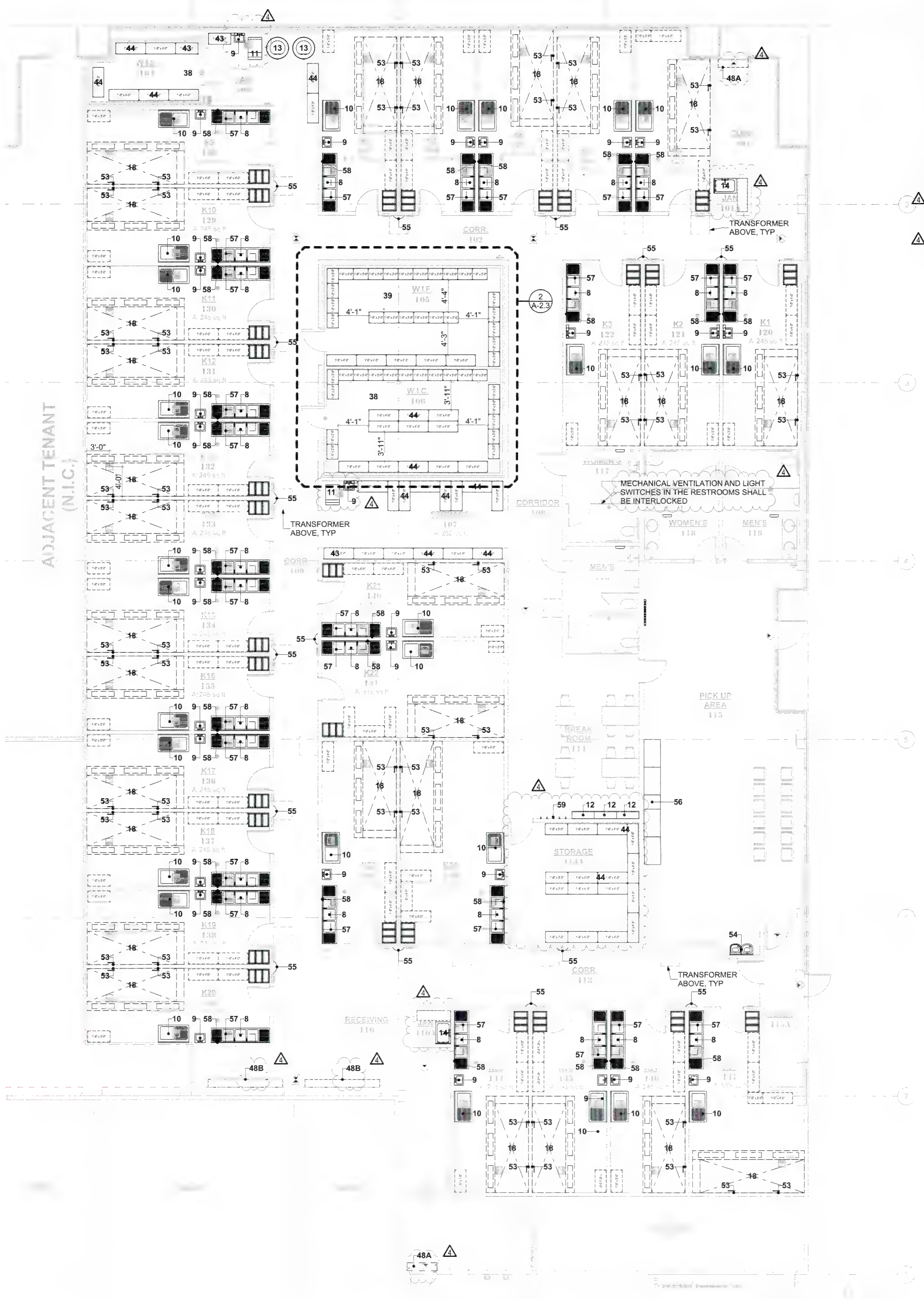

EQUIPMENT PLAN (1)

SCALE: 1/8" = 1'-0"

ALAMEDA COUNTY H.C.S.A.
DEPT. OF ENVIRONMENTAL HEALTH
Date 10/17/2022 Approved by T. TRAN
R.E.H.S. No. 7712
Approved plans shall not be changed without authorization
Approval expires on 4/17/2023

CALL HEALTH DEPT. (510) 567-6700
48 HOURS IN ADVANCE TO ARRANGE:
- Rough Plumbing Inspection
- Final Inspection (Before Foods Is Brought In)

EQUIPMENT SCHEDULE

#	QTY	EQUIPMENT DESCRIPTION	MANUFACTURER	MODEL NO.	SUPPLY BY	INSTALL BY	REMARKS
8	28	3 COMP SINK W/ 2 DRAIN BOARDS (18x18)	REGENCY	600S3181818X	OWNER	G.C.	
9	30	SS WALL MOUNTED HAND SINK W/ HAND SOAP, PAPER TOWEL DISPENSER & WRIST HANDLES ON FAUCET (6" HIGH S.S. SPLASH GUARD ON BOTH SIDES)	REGENCY	600HS17SP	OWNER	G.C.	HOT & COLD RUNNING WATER SUPPLIED THROUGH MIXING VALVE
10	28	1 COMP SINK W/ 1 DRAIN BOARD	REGENCY	600S1232324L(R)FT	OWNER	G.C.	
11	2	ICE MAKER W/ ICE BIN	AVANTCO	194KMC420B2F	OWNER	G.C.	
12	3	WALL MOUNTED LOCKER @ 6" ABOVE FINISHED FLOOR (NO LEGS)	WIN-HOLT	WL-618	OWNER	G.C.	
13	2	WATER HEATER (GAS)	A.O. SMITH	SEE MECH. DWG	G.C.	G.C.	
14	2	MOP SINK (24"x36")	MUSTEE	65M	OWNER	G.C.	
18	28	TYPE I HOOD	ECON AIR	SEE MECH. DWG	G.C.	G.C.	
38	2	WALK-IN COOLER	CUSTOM		G.C.	G.C.	
39	1	WALK-IN FREEZER	CUSTOM		G.C.	G.C.	
43	3	WIRE SHELF (36")	REGENCY	460EC1836	OWNER	G.C.	
44	184	WIRE SHELF (48")	REGENCY	460EC1848	OWNER	G.C.	
48A	2	AIR CURTAIN	MARS	N236-1U	OWNER	G.C.	
48B	2	AIR CURTAIN	MARS	N2120-3U	OWNER	G.C.	
53	56	WOK RANGE FAUCET	FISHER	4750	OWNER	G.C.	
54	1	BI-LEVEL ADA DRINKING FOUNTAIN	ELKAY	LZSTL8WSLP	OWNER	G.C.	
55	15	FLY CATCHER	GARDNER	WS-95	OWNER	G.C.	
56	1	SMART LOCKER	BOXNEARBY		OWNER	G.C.	
57	28	DRY RACK SHELF OVER 3 COMP SINK	REGENCY	460EC1448WSK	OWNER	G.C.	
58	28	HOSE BIBB FAUCET	T & S	B-0709-JJ	OWNER	G.C.	
59	5	COAT HOOK			OWNER	G.C.	

EQUIPMENT PLAN NOTES:

1. BACKING @ ALL RATED WALLS AND WALL UNDER EXHAUST HOOD SHALL CONSIST OF 6" 20 GA. METAL STRAPS INSTALLED PRIOR TO INSTALLATION OF GYP. BD @ ALL AREA REQUIRED FOR FASTENING EQUIPMENT SECURELY TO STUD WALL
2. BACKING @ ALL OTHER WALLS SHALL CONSIST OF 5/8" PLYWOOD SHEATING IN PLACE OF GYP. BD. WITHIN DASHED BOXED AREAS. FINISH OVER SPECIFIED WALL PANEL FINISH PER ELEVATIONS
3. ADEQUATE ELECTRICAL OUTLETS SHOULD BE PROVIDED FOR FUTURE EQUIPMENT IN EACH KITCHEN
4. CONDUITS OF ALL TYPE SHALL BE INSTALLED WITHIN WALLS AS PRACTICABLE. IF EXPOSED CONDUITS SHALL BE MOUNTED 1/2" FROM THE WALLS AND AT LEAST 6" ABOVE THE FLOOR TO ALLOW CLEANING ACCESS

G.C. TO VERIFY WITH OWNER ON WALL SHELVES LOCATIONS

DRY STORAGE SUMMARY

ROOM NO.	ROOM NAME	FLOOR AREA (S.F.)	DRY STOR. FACTOR	DRY STOR. REQ. (S.F.)	DRY STOR. PROV. (S.F.)
120	K1	245	0.25	61	66
121	K2	245	0.25	61	66
122	K3	245	0.25	61	66
123	K4	233	0.25	58	60
124	K5	245	0.25	61	66
125	K6	245	0.25	61	66
126	K7	245	0.25	61	66
127	K8	245	0.25	61	66
128	K9	245	0.25	61	66
129	K10	245	0.25	61	66
130	K11	245	0.25	61	66
131	K12	245	0.25	61	66
132	K13	245	0.25	61	66
133	K14	245	0.25	61	66
134	K15	245	0.25	61	66
134	K15	245	0.25	61	66
135	K16	245	0.25	61	66
136	K17	245	0.25	61	66
137	K18	245	0.25	61	66
138	K19	245	0.25	61	66
139	K20	245	0.25	61	66
140	K21	245	0.25	61	66
141	K22	319	0.25	80	84
142	K23	273	0.25	68	72
143	K24	382	0.25	95	96
144	K25	245	0.25	61	66
145	K26	245	0.25	61	66
146	K27	245	0.25	61	66
147	K28	313	0.25	78	84

DRY STORAGE NOTES:

DRY STORAGE AREA REQUIREMENT: KITCHEN FLOOR AREA x 25% PER HEALTH DEPT.

DRY STORAGE IN EACH KITCHEN AREAS ARE SHOWN FOR REFERENCE ONLY. DRY STORAGE AREA CALCULATED AS LINEAR FEET x 1.5' DEPTH x 4 SHELVES.

EACH TENANT SHALL DEMONSTRATE SUFFICIENT DRY STORAGE PER HEALTH DEPARTMENT REQUIREMENTS AT THE TIME OF THE TENANT IMPROVEMENT PERMIT APPLICATION. IN THE EVENT TENANT DESIRES TO UTILIZE DRY STORAGE OUTSIDE OF THEIR TENANT AREA, COMMON DRY STORAGE AREA IS AVAILABLE FOR USE BY THE TENANT AND THEIR DRY STORAGE AREA WILL BE DESIGNATED AT THE TIME OF EACH INDIVUAL KITCHEN'S TENANT IMPROVEMENT APPLICATION.

EGRESS / ACCESSIBILITY NOTES:

ALL FUTURE KITCHEN EQUIPMENT SHALL BE LOCATED TO PROVIDE EGRESS AND ACCESSIBLE ROUTE CLEARANCES THROUGHT EACH PRIVATE KITCHEN AREAS. THE CLEAR WIDTH FOR AISLES SHALL BE 36 INCHES WHEN SERVING ELEMENTS ON ONE SIDE, 44" MINIMUM IF SERVING ELEMENTS ON BOTH SIDES. (CBC 11B-403.5)

CO-AR DESIGN, INC.
680 Brea Canyon Rd., Ste. 178
Diamond Bar, CA 91789

Office: 909-598-0186
http:\\www.coardesign.com

Dennis J. Lee, Architect

THESE DRAWINGS ARE THE PROPERTY OF THE ARCHITECT. THE DESIGNS SHOWN AND DESCRIBED HERIN INCLUDING ALL TECHNICAL DRAWINGS ARE PROPRIETARY AND CANNOT BE COPIED, DUPLICATED OR COMMERCIALLY EXPLOITED IN WHOLE OR IN PART. THE DRAWINGS AND SPECIFICATIONS SHALL NOT BE USED BY THE OWNER ON OTHER PROJECTS, FOR ADDITIONS TO THIS PROJECT OR FOR COMPLETION OF THIS PROJECT BY OTHERS. THE OWNER AGREES TO HOLD HARMLESS, INDEMNIFY AND DEFEND THE ARCHITECT AGAINST ALL DAMAGES, CLAIMS AND LOSSES, INCLUDING DEFENSE COSTS ARISING OUT OF ANY REUSE OF THE PLANS AND SPECIFICATIONS WITHOUT THE WRITTEN AUTHORIZATION OF THE ARCHITECT OF RECORD

COPYRIGHT © 2022 CO-AR DESIGN, INC., ALL RIGHTS RESERVED

SEAL

LICENSED ARCHITECT
DENNIS JOON HO LEE
C-29168
4/30/2023
RENEWAL DATE
STATE OF CALIFORNIA

NOTES

PROJECT

SALTALK FREMONT KITCHEN TENANT IMPROVEMENT

42550 ALBRAE ST.,
FREMONT, CA 94538

SALTALK, INC.
3334 VICTOR CT.,
SANTA CLARA, CA 95054

4	1ST PLANNING SUBMITTAL		2/10/22
5	SD		3/7/22
6	1ST HEALTH SUBMITTAL		4/7/22
7	1ST BLDG SUBMITTAL		4/11/22
8	2ND BLDG SUBMITTAL	1	7/29/22
9	3RD USD SUBMITTAL	3	9/12/22
10	2ND HEALTH SUBMITTAL	4	xx/xx/22
11	3RD BLDG SUBMITTAL	5	xx/xx/22

PROJECT NO	202201
SCALE	AS SHOWN
	10/4/2022
DRAWN BY	ED / FW
CHECKED BY	DL

SHEET TITLE

EQUIPMENT PLAN

A-2.3

CONTRACTOR TO VERIFY EXISTING CONDITIONS AND SHALL MATCH EXISTING SUBGRADE AND SLAB SPECS FOR ALL BACKFILL AND FILL IN SLABS. CONTRACTOR PATCH EXISTING CRACKS, GAPS, LEVEL AND SEND FLOOR PRIOR TO FINAL FLOOR FINISH

Alameda County
Dept. of Environmental Health
Approved By: T. Tran

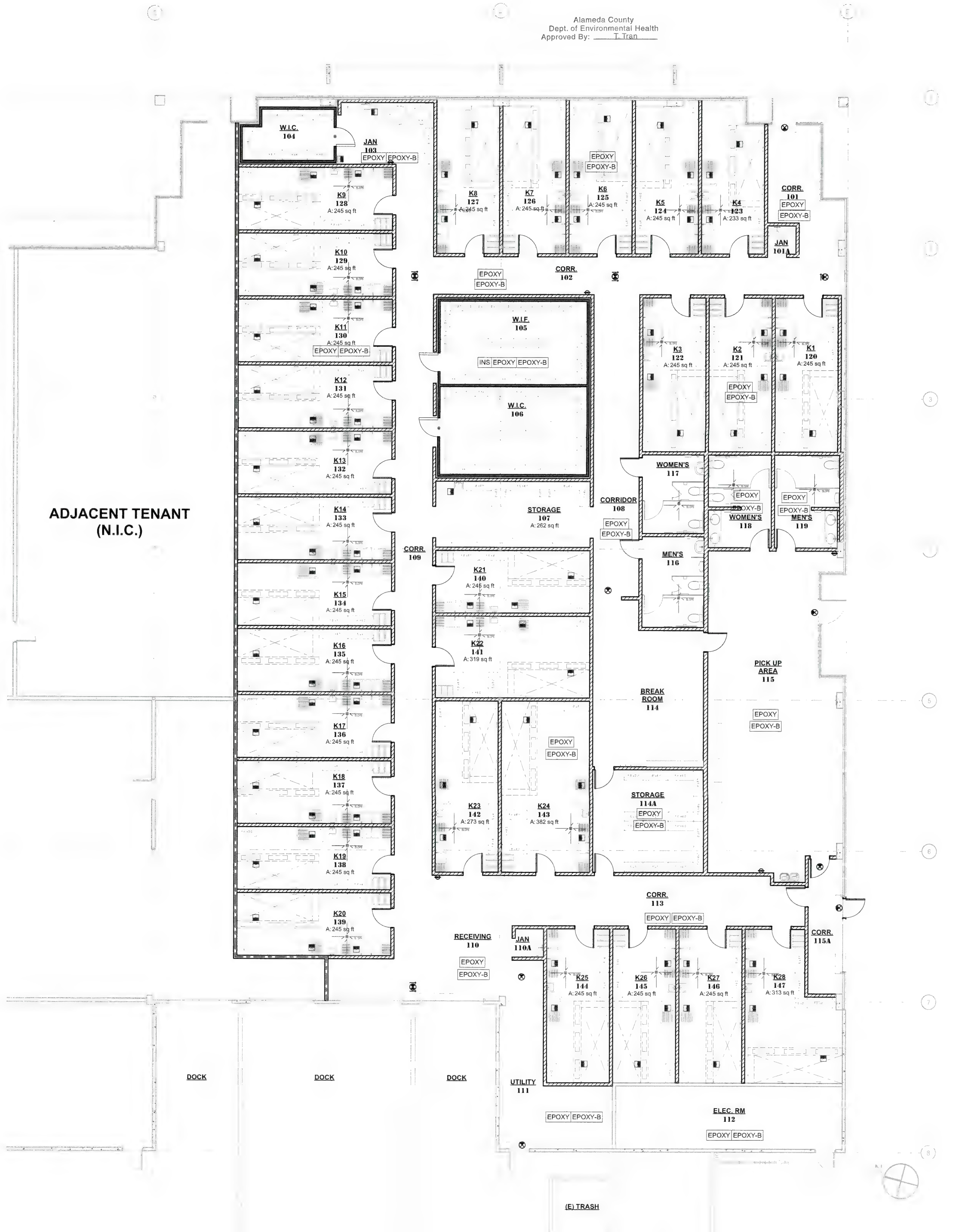

FLOOR FINISH PLAN 1
SCALE: 1/8" = 1'-0"

FINISH SCHEDULE

NO.	ROOM NAME	FLOOR	BASE	WALLS: NORTH	WALLS: EAST	WALLS: SOUTH	WALLS: WEST	CEILING	NOTES / REMARKS
101	CORR.	EPOXY	EPOXY-B	FRP / GYP / SGPT	N/A	N/A	FRP / GYP / SGPT	EXPOSED CEILING	
101A	JAN	EPOXY	EPOXY-B	FRP (FULL HEIGHT)	FRP (FULL HEIGHT)	FRP (FULL HEIGHT)	FRP (FULL HEIGHT)	SSC	
102	CORR.	EPOXY	EPOXY-B	N/A	FRP / GYP / SGPT	N/A	FRP / GYP / SGPT	EXPOSED CEILING	
103	JAN	EPOXY	EPOXY-B	FRP (FULL HEIGHT)	FRP (FULL HEIGHT)	FRP (FULL HEIGHT)	FRP (FULL HEIGHT)	SSC	
104	W.I.C.	EPOXY	EPOXY-B	GSM PANEL	GSM PANEL	GSM PANEL	GSM PANEL	GSM PANEL	
105	W.I.F.	EPOXY	EPOXY-B	GSM PANEL	GSM PANEL	GSM PANEL	GSM PANEL	GSM PANEL	
106	W.I.C.	EPOXY	EPOXY-B	GSM PANEL	GSM PANEL	GSM PANEL	GSM PANEL	GSM PANEL	
107	STORAGE	EPOXY	EPOXY-B	FRP (FULL HEIGHT)	FRP (FULL HEIGHT)	FRP (FULL HEIGHT)	FRP (FULL HEIGHT)	SSC	
108	CORRIDOR	EPOXY	EPOXY-B	FRP / GYP / SGPT	N/A	FRP / GYP / SGPT	FRP / GYP / SGPT	EXPOSED CEILING	
109	CORR.	EPOXY	EPOXY-B	FRP / GYP / SGPT	N/A	FRP / GYP / SGPT	N/A	EXPOSED CEILING	
110	RECEIVING	EPOXY	EPOXY-B	FRP / GYP / SGPT	FRP / GYP / SGPT	FRP / GYP / SGPT	N/A	EXPOSED CEILING	
110A	JAN	EPOXY	EPOXY-B	FRP (FULL HEIGHT)	FRP (FULL HEIGHT)	FRP (FULL HEIGHT)	FRP (FULL HEIGHT)	SSC	
111	UTILITY	EPOXY	EPOXY-B	GYP / SGPT	GYP / SGPT	GYP / SGPT	GYP / SGP	EXPOSED CEILING	
112	ELEC. RM	EPOXY	EPOXY-B	GYP / SGPT	GYP / SGPT	GYP / SGPT	GYP / SGPT	EXPOSED CEILING	
113	CORR.	EPOXY	EPOXY-B	N/A	FRP / GYP / SGPT	FRP / GYP / SGPT	FRP / GYP / SGPT	EXPOSED CEILING	
114	BREAK ROOM	EPOXY	EPOXY-B	GYP / SGPT	GYP / SGPT	GYP / SGPT	GYP / SGPT	EXPOSED CEILING	
114A	STORAGE	EPOXY	EPOXY-B	FRP (FULL HEIGHT)	FRP (FULL HEIGHT)	FRP (FULL HEIGHT)	FRP (FULL HEIGHT)	SSC	
115	PICK UP AREA	EPOXY	EPOXY-B	GYP / SGPT	GYP / SGPT	N/A	GYP / SGPT	SSC	
115A	CORR.	EPOXY	EPOXY-B	GYP / SGPT	N/A	N/A	GYP / SGPT	EXPOSED CEILING	
116	MEN'S	EPOXY	EPOXY-B	FRP (FULL HEIGHT)	FRP (FULL HEIGHT)	FRP (FULL HEIGHT)	FRP (FULL HEIGHT)	GYP / SGPT	
117	WOMEN'S	EPOXY	EPOXY-B	FRP (FULL HEIGHT)	FRP (FULL HEIGHT)	FRP (FULL HEIGHT)	FRP (FULL HEIGHT)	GYP / SGPT	
118	WOMEN'S	EPOXY	EPOXY-B	CT	CT	CT	CT	GYP / SGPT	
119	MEN'S	EPOXY	EPOXY-B	CT	CT	CT	CT	GYP / SGPT	
120	K1	EPOXY	EPOXY-B	SS (FULL HEIGHT)	SS (FULL HEIGHT)	SS (FULL HEIGHT)	SS (FULL HEIGHT)	SSC	
121	K2	EPOXY	EPOXY-B	SS (FULL HEIGHT)	SS (FULL HEIGHT)	SS (FULL HEIGHT)	SS (FULL HEIGHT)	SSC	
122	K3	EPOXY	EPOXY-B	SS (FULL HEIGHT)	SS (FULL HEIGHT)	SS (FULL HEIGHT)	SS (FULL HEIGHT)	SSC	
123	K4	EPOXY	EPOXY-B	SS (FULL HEIGHT)	SS (FULL HEIGHT)	SS (FULL HEIGHT)	SS (FULL HEIGHT)	SSC	
124	K5	EPOXY	EPOXY-B	SS (FULL HEIGHT)	SS (FULL HEIGHT)	SS (FULL HEIGHT)	SS (FULL HEIGHT)	SSC	
125	K6	EPOXY	EPOXY-B	SS (FULL HEIGHT)	SS (FULL HEIGHT)	SS (FULL HEIGHT)	SS (FULL HEIGHT)	SSC	
126	K7	EPOXY	EPOXY-B	SS (FULL HEIGHT)	SS (FULL HEIGHT)	SS (FULL HEIGHT)	SS (FULL HEIGHT)	SSC	
127	K8	EPOXY	EPOXY-B	SS (FULL HEIGHT)	SS (FULL HEIGHT)	SS (FULL HEIGHT)	SS (FULL HEIGHT)	SSC	
128	K9	EPOXY	EPOXY-B	SS (FULL HEIGHT)	SS (FULL HEIGHT)	SS (FULL HEIGHT)	SS (FULL HEIGHT)	SSC	
129	K10	EPOXY	EPOXY-B	SS (FULL HEIGHT)	SS (FULL HEIGHT)	SS (FULL HEIGHT)	SS (FULL HEIGHT)	SSC	
130	K11	EPOXY	EPOXY-B	SS (FULL HEIGHT)	SS (FULL HEIGHT)	SS (FULL HEIGHT)	SS (FULL HEIGHT)	SSC	
131	K12	EPOXY	EPOXY-B	SS (FULL HEIGHT)	SS (FULL HEIGHT)	SS (FULL HEIGHT)	SS (FULL HEIGHT)	SSC	
132	K13	EPOXY	EPOXY-B	SS (FULL HEIGHT)	SS (FULL HEIGHT)	SS (FULL HEIGHT)	SS (FULL HEIGHT)	SSC	
133	K14	EPOXY	EPOXY-B	SS (FULL HEIGHT)	SS (FULL HEIGHT)	SS (FULL HEIGHT)	SS (FULL HEIGHT)	SSC	
134	K15	EPOXY	EPOXY-B	SS (FULL HEIGHT)	SS (FULL HEIGHT)	SS (FULL HEIGHT)	SS (FULL HEIGHT)	SSC	
134	K15	EPOXY	EPOXY-B	SS (FULL HEIGHT)	SS (FULL HEIGHT)	SS (FULL HEIGHT)	SS (FULL HEIGHT)	SSC	
135	K16	EPOXY	EPOXY-B	SS (FULL HEIGHT)	SS (FULL HEIGHT)	SS (FULL HEIGHT)	SS (FULL HEIGHT)	SSC	
136	K17	EPOXY	EPOXY-B	SS (FULL HEIGHT)	SS (FULL HEIGHT)	SS (FULL HEIGHT)	SS (FULL HEIGHT)	SSC	
137	K18	EPOXY	EPOXY-B	SS (FULL HEIGHT)	SS (FULL HEIGHT)	SS (FULL HEIGHT)	SS (FULL HEIGHT)	SSC	
138	K19	EPOXY	EPOXY-B	SS (FULL HEIGHT)	SS (FULL HEIGHT)	SS (FULL HEIGHT)	SS (FULL HEIGHT)	SSC	
139	K20	EPOXY	EPOXY-B	SS (FULL HEIGHT)	SS (FULL HEIGHT)	SS (FULL HEIGHT)	SS (FULL HEIGHT)	SSC	
140	K21	EPOXY	EPOXY-B	SS (FULL HEIGHT)	SS (FULL HEIGHT)	SS (FULL HEIGHT)	SS (FULL HEIGHT)	SSC	
141	K22	EPOXY	EPOXY-B	SS (FULL HEIGHT)	SS (FULL HEIGHT)	SS (FULL HEIGHT)	SS (FULL HEIGHT)	SSC	
142	K23	EPOXY	EPOXY-B	SS (FULL HEIGHT)	SS (FULL HEIGHT)	SS (FULL HEIGHT)	SS (FULL HEIGHT)	SSC	
143	K24	EPOXY	EPOXY-B	SS (FULL HEIGHT)	SS (FULL HEIGHT)	SS (FULL HEIGHT)	SS (FULL HEIGHT)	SSC	
144	K25	EPOXY	EPOXY-B	SS (FULL HEIGHT)	SS (FULL HEIGHT)	SS (FULL HEIGHT)	SS (FULL HEIGHT)	SSC	
145	K26	EPOXY	EPOXY-B	SS (FULL HEIGHT)	SS (FULL HEIGHT)	SS (FULL HEIGHT)	SS (FULL HEIGHT)	SSC	

MATERIAL SCHEDULE

FLOOR FINISH

EPOXY — EPOXY FLOORING, MINIMUM 1/4" THICKNESS
(SMOOTH FINISH UNDER EQUIPMENTS, SLIGHTLY TEXTURED @ WALKWAYS)
'ARMORPOXY', ARMOR ULTRA (LOW VOC), COLOR: LIGHT GREY
CONTACT: GREG WEINER, 908.810.9613, greg@armorpoxy.com

EPOXY-B — 6" SEALED SEAMLESS POLYCRETE COVE BASE WITH 3/8" RADIUS (COMPLETELY SMOOTH FINISH)

INS — INSULATED FLOOR WITH EPOXY FINISH

PAINT (SEMI-GLOSS PAINT @ SERVICE AREA & RESTROOM)

PT-1 — SEMI GLOSS PAINT (WHITE)
'SHERWIN WILLIAMS', SW005 PURE WHITE

PT-2 — LOW SHEEN PAINT (LIGHT GRAY)
'SHERWIN WILLIAMS', SW0055 LIGHT FRENCH GRAY

WALL / CEILING FINISH

FRP — FIBER REINFORCEMENT PANEL (WHITE)

SS — STAINLESS STEEL PANEL

T-1 — 3"x12" CERAMIC SUBWAY TILE
'ARIZONA TILE', MODEL: BARE, WHITE, SIZE: 3"x12" / 50% OFFSET
CONTACT: ED AHRENS, 562.896.2832, eahrens@arizonatile.com

TRANSITION TRIM

ET-1 — STAINLESS STEEL 'U' ANGLE, 'L' ANGLE

ET-2 — METAL EDGE TRIM **'SCHLUTER'**, JOLLY-A125ACGB, BRUSHED CHROME

FINISH PLAN LEGEND:

(REFER TO MATERIAL SCHEDULE ON A-6.1)

EPOXY — EPOXY FLOORING
(SMOOTH FINISH UNDER EQUIPMENTS, SLIGHTLY TEXTURED @ WALKWAYS)
'ARMORPOXY', ARMOR ULTRA (LOW VOC), COLOR: LIGHT GREY

FLOOR SINK
NOTE: ALL FLOOR SINKS ARE AT LEAST 50% EXPOSED UNDER ALL MILLWORK AND NON MOBILE EQUIPMENT

TRENCH DRAIN

SLOPE FLOOR TOWARDS DRAIN AS SHOWN, 2% SLOPE MAX.

FLAME SPREAD INDEX:

INTERIOR WALL AND CEILING FINISH SHALL HAVE A FLAME SPREAD INDEX NOT GREATER THAN THAT SPECIFIED IN TABLE 803.13 FOR THE GROUP AND LOCATION DESIGNATED.

ALL INTERIOR WALL AND CEILING FINISH SHALL BE CLASS 'C' MINIMUM. (F OCCUPANCY, SPRINKLERED)

CLASS C = FLAME SPREAD INDEX 76 ~ 200
SMOKE DEVELOPED INDEX 0 ~ 450.

INTERIOR FINISH GENERAL NOTES:

1. INTERIOR FINISH MATERIALS APPLIED TO WALLS & CEILING SHALL HAVE A MAXIMUM SPREAD CLASSIFICATION OF II FOR EXIT CORRIDORS & III FOR OTHER ROOMS OR AREAS.
2. ALL PIPING AND REFRIGERATION COILS IN PREPARATION AREAS TO BE CONCEALED & AS INDICATED ON PLUMBING & REFRIGERATION DRAWINGS, TYPICAL.
3. ALL GYP. BOARD TO BE TAPED & SPACKLED.
4. DOOR SWINGS INTO EXIT CORRIDOR SHALL NOT REDUCE THE REQUIRED 44" CLEAR WIDTH BY MORE THAN HALF.
5. PAINT FOR SALES AREA COLUMNS, VERIFY COLOR WITH DESIGNER & 99-RANCH.
6. FULL HEIGHT STAINLESS STEEL FINISH AT ALL KITCHEN FOOD PREP AREA
7. T-BAR CEILING IN FOOD PREPARATION AREA, CHANGE ROOM & RESTROOM USE USG WASHABLE SURFACE VINYL TILE, USG STIPPLE WHITE #3270
8. ALL PAINT, TILES, F.R.P. ON THE WALLS & CEILING SURFACE USE LIGHT COLOR WITH "SMOOTH & NO TEXTURE" IN THE FOOD PREPARATION AREA, RESTROOM & CHANGE AREA.
9. WALLS BEHIND COOKING EQUIPMENTS SHALL BE STAINLESS STELL.
10. SUBMIT SAMPLES TO OWNER REP FOR APPROVAL, ALLOW $2.00/SF MATERIAL COST IF MATERIAL IS NOT AVAILABLE.

ROOM FINISH GENERAL NOTES:

1. REFER TO CEILING PLAN FOR CEILING HEIGHT VARIATIONS & SOFFIT DETAILS.
2. PROVIDE WONDERBOARD OVER PLYWOOD FOR CERAMIC TILE.
3. EXPOSED CONCRETE TO RECEIVE HARDENER & CLEAR SEALER.
4. ACOUSTICAL PANELS TO HAVE FACTORY FINISH WASHABLE SURFACE APPROVED BY LOCAL HEALTH DEPT.
5. PROVIDE FURRING WALL, STUDS @ 24" O.C. OVER EXISTING WALL, U.N.O. (SEE DETAIL 6/A-5.1)
6. GYP. BOARD AT WALLS TO BE MOISTURE RESISTANT.

GENERAL PAINT NOTE:

1. ALL VERTICAL WALLS AND SOFFITS VISIBLE TO CUSTOMER AREAS TO BE PAINTED SEMI-GLOSS (SHERWIN WILLIAMS 7650 ELLIE GRAY) FROM 14' A.F.F. AND ABOVE, U.N.O.
2. PAINTING EXPOSED CEILING AREAS SHALL INCLUDE THE WOOD TRUSS MEMBERS, FIRE ALARM CONDUIT SYSTEM TO BE PAINTED RED U.N.O.
3. ALL INTERIOR DOOR FRAMES TO BE PAINTED SEMI-GLOSS (SHERWIN WILLIAMS 6076-TURKISH COFFEE)
4. ALL PAINT USED IS LIGHT IN COLOR W. SEMI-GLOSS FINISH.

FINISH MATERIALS ABBREVIATIONS:

VCT	VINLY COMPOSITE TILE 12"X12"X1/8"
LVT	LUXURY VINLY SHEET AND TILE
VTS	6" VINYL TOPSET BASE
GWB	5/8" TYPE X GYPSUM WALLBOARD
PT	PAINT (BY SHERWIN WILLIAMS)
PL	PLASTIC LAMINATE
S.G.PT	SEMI-GLOSS PAINT
PLAS	SMOOTH PLASTER OVER (E)MASONRY
SAC	SUSPENDED ACOUSTICAL CEILING (SEE CEILING PLAN LEGEND)
SSC	SANITARY ACOUSTICAL CEILING - WASHABLE SURFACE MANUFACTURER: USG, STIPPLE WHITE #3270
CT	CERAMIC / PORCELAIN TILE
QT	QUARRY TILE
SRT	SLIP RETARDANT TILE
GSM	GALVANIZED SHEET METAL PANEL
FRP	FIBER RE-INFORCEMENT PANEL
RTR	RUBBER, TREAD & RISER
SS	STAINLESS STEEL PANEL
FF	FACTORY FINISH
LW.CONC.	1 1/2" LIGHT WEIGHT CONCRETE
N/A	NOT APPLICABLE

CO-AR DESIGN, INC.
680 Brea Canyon Rd., Ste. 178
Diamond Bar, CA 91789

Office: 909-598-0186
http:\\www.coardesign.com

Dennis J. Lee, Architect
dennisl@coardesign.com

THESE DRAWINGS ARE THE PROPERTY OF THE ARCHITECT. THE DESIGNS SHOWN AND DESCRIBED HERIN INCLUDING ALL TECHN CAL DRAWINGS ARE PROPRIETARY AND CANNOT BE COPIED, DUPLICATED OR COMMERCIALLY EXPLOITED, IN WHOLE OR IN PART THE DRAWINGS AND SPECIFICATIONS SHALL NOT BE USED BY THE OWNER ON OTHER PROJECTS, FOR ADDITIONS TO THIS PROJECT, OR FOR COMPLETION OF THIS PROJECT BY OTHERS. THE OWNER AGREES TO HOLD HARMLESS, INDEMNIFY AND DEFEND THE ARCHITECT AGAINST ALL DAMAGES, CLAIMS AND LOSSES, INCLUDING DEFENSE COSTS, ARISING OUT OF ANY REUSE OF THE PLANS AND SPECIFICATIONS WITHOUT THE WRITTEN AUTHORIZATION OF THE ARCHITECT OF RECORD.

COPYRIGHT © 2022 CO-AR DESIGN, INC., ALL RIGHTS RESERVED

SEAL
LICENSED ARCHITECT
DENNIS JOON HO LEE
C-29168
4/30/2023
RENEWAL DATE
STATE OF CALIFORNIA

NOTES

PROJECT
SALTALK FREMONT KITCHEN TENANT IMPROVEMENT

42550 ALBRAE ST.,
FREMONT, CA 94538

CLIENT
SALTALK, INC.
3334 VICTOR CT.,
SANTA CLARA, CA 95054

SUBMITTALS/ REVISIONS

4	1ST PLANNING SUBMITTAL		2/10/22
5	SD		3/7/22
6	1ST HEALTH SUBMITTAL		4/7/22
7	1ST BLDG SUBMITTAL		4/11/22
8	2ND BLDG SUBMITTAL	1	7/29/22
9	3RD USD SUBMITTAL	3	9/12/22
10	2ND HEALTH SUBMITTAL	4	xx/xx/22
11	3RD BLDG SUBMITTAL	5	xx/xx/22

PROJECT NO: 202201
SCALE: AS SHOWN
DATE: 10/4/2022
DRAWN BY: ED / FW
CHECKED BY: DL

SHEET TITLE
FLOOR FINISH PLAN & SCHEDULE

SHEET NO
A-2.4

REFLECTED CEILING PLAN (1)
SCALE: 1/8" = 1'-0"

LIGHT FIXTURE SCHEDULE

TYPE	SYMBOL	QTY	DESCRIPTION	MANUFACTURER	SPEC	MOUNTING HEIGHT	NOTES / REMARKS
A		107	2X4 LED ARCHITECTURAL RECESSED TROFFER	ORACLE LIGHTING	24-FPL-BL-LED (4000K)	SEE PLAN	KITCHEN
B		26	6" DIA. LED RECESSED DOWNLIGHT (@ RESTROOMS & DRINKING FOUNTAIN)	ELITE LIGHTING	HH6-LED (4000K)	SEE PLAN	RESTROOM
C1		43	8' LED STRIP PENDANT LIGHT	ORACLE LIGHTING	OC1-LED (4000K)	HEIGHT VARIES, SEE PLAN, SUSPENDED MOUNTING	CORRIDORS
C2		3	8' LED STRIP PENDANT LIGHT	ORACLE LIGHTING	OLS-D-LED	10'-0" A.F.F., SUSPENDED MOUNTING	DINING AREA
W		20	FREEZER AND COOLER LIGHTS TO BE RPOVIDED BY WALK-IN BOX MANUFACTURER, TYP.			SEE PLAN	W.I.C. / W.I.F.
X1		11	EXIT SIGN	MAXILUME	ELX-603		

ORACLE LIGHTING / ELITE LIGHTING / MAXILUME MANUFACTURER CONTACT:
VANESSA MEDINA, VMEDINA@IUSEELITE.COM, 323-949-0585

CEILING LEGEND:

2X4 SANITARY ACOUSTICAL CEILING (WASHABLE SURFACE W/ NON-PERFORATED SMOOTH VINYL FACED LIGHT COLOR), SEE DETAIL 2 & 4 / A-5.1
LAY-IN TILE 2x4x1/2" USG CLIMA PLUS #3270 W/ 15/16" SUSPENSION SYSTEM, ICC-ESR 1222

5/8" TYPE 'X' GYPSUM BOARD CEILING IN RESTROOMS & JANITOR CLOSETS ARE CLEANABLE (4)

SUPPLY AIR GRILLE, SEE MECH. DWGS

RETURN AIR GRILLE, SEE MECH. DWGS

EXHAUST AIR GRILLE, SEE MECH. DWGS

SUPPLY AIR DIFFUSER, SEE MECH. DWGS

Alameda County
Dept. of Environmental Health
Approved By: T. Tran

CO-AR

CO-AR DESIGN, INC.
680 Brea Canyon Rd., Ste. 178
Diamond Bar, CA 91789

Office: 909-598-0186
http:\\www.coardesign.com

Dennis J. Lee, Architect
dennisl@coardesign.com

THESE DRAWINGS ARE THE PROPERTY OF THE ARCHITECT. THE DESIGNS SHOWN AND DESCRIBED HERIN INCLUDING ALL TECHNICAL DRAWINGS ARE PROPRIETARY AND CANNOT BE COPIED, DUPLICATED OR COMMERCIALLY EXPLOITED IN WHOLE OR IN PART. THE DRAWINGS AND SPECIFICATIONS SHALL NOT BE USED BY THE OWNER ON OTHER PROJECTS, FOR ADDITIONS TO THIS PROJECT, OR FOR COMPLETION OF THIS PROJECT BY OTHERS. THE OWNER AGREES TO HOLD HARMLESS, INDEMNIFY AND DEFEND THE ARCHITECT AGAINST ALL DAMAGES, CLAIMS AND LOSSES, INCLUDING DEFENSE COSTS, ARISING OUT OF ANY REUSE OF THE PLANS AND SPECIFICATIONS WITHOUT THE WRITTEN AUTHORIZATION OF THE ARCHITECT OF RECORD

COPYRIGHT © 2022 CO-AR DESIGN, INC
ALL RIGHTS RESERVED

SEAL
LICENSED ARCHITECT
DENNIS JOON HO LEE
C-29168
4/30/2023
RENEWAL DATE
STATE OF CALIFORNIA

NOTES

PROJECT
SALTALK FREMONT KITCHEN TENANT IMPROVEMENT

42550 ALBRAE ST.,
FREMONT, CA 94538

CLIENT
SALTALK, INC.
3334 VICTOR CT.,
SANTA CLARA, CA 95054

SUBMITTALS/REVISIONS

4	1ST PLANNING SUBMITTAL		2/10/22
5	SD		3/7/22
6	1ST HEALTH SUBMITTAL		4/7/22
7	1ST BLDG SUBMITTAL		4/11/22
8	2ND BLDG SUBMITTAL	1	7/29/22
9	3RD USD SUBMITTAL	3	9/12/22
10	2ND HEALTH SUBMITTAL	4	xx/xx/22
11	3RD BLDG SUBMITTAL	5	xx/xx/22

PROJECT NO	202201
SCALE	AS SHOWN
DATE	10/4/2022
DRAWN BY	ED / FW
CHECKED BY	D.L

SHEET TITLE
REFLECTED CEILING PLAN

SHEET NO.
A-2.5

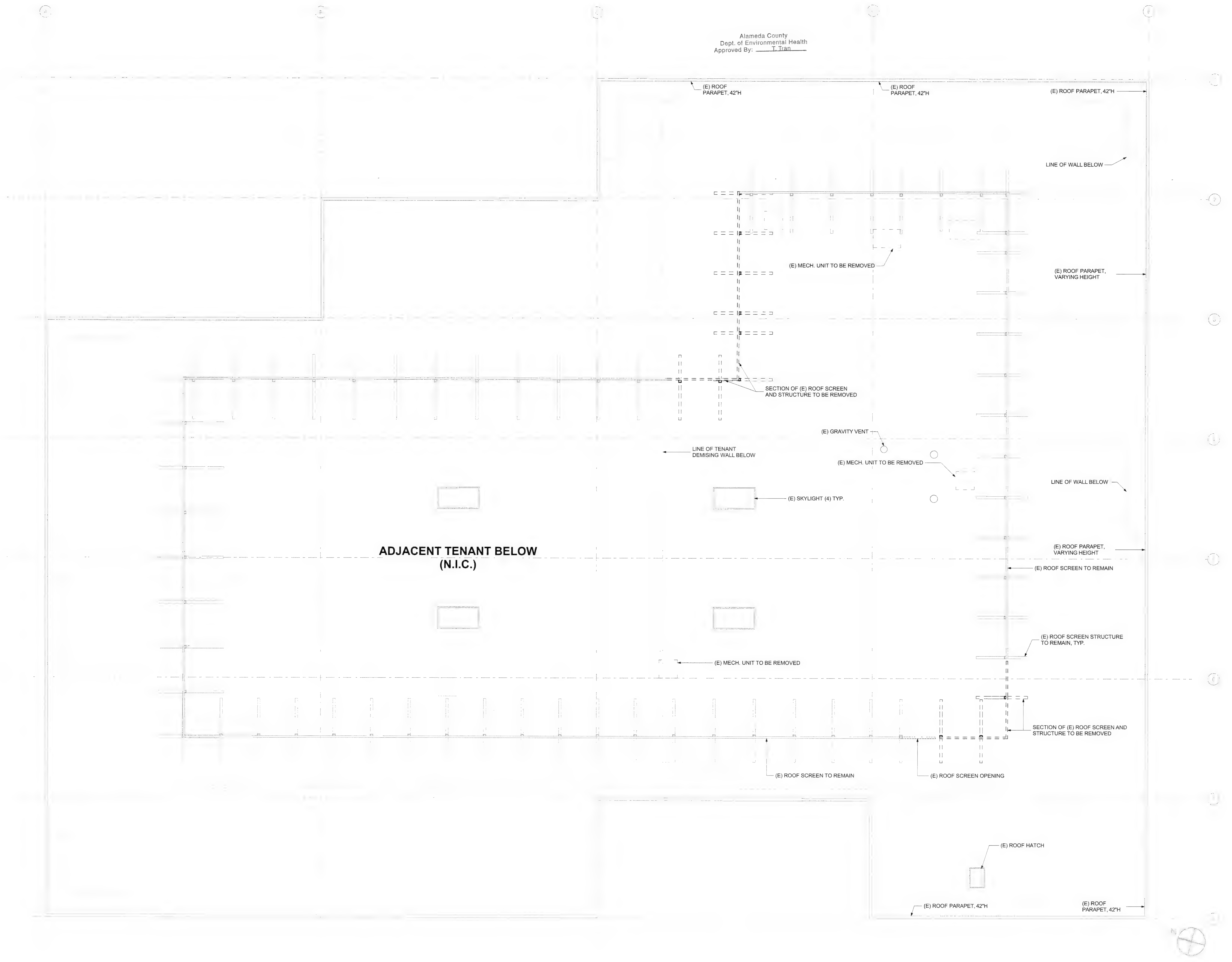

EXISTING / DEMO ROOF PLAN (1)
SCALE: 1/8" = 1'-0"

CO-AR DESIGN, INC.
680 Brea Canyon Rd., Ste. 178
Diamond Bar, CA 91789

Office: 909-598-0186
http:\\www.coardesign.com

Dennis J. Lee, Architect
dennisl@coardesign.com

THESE DRAWINGS ARE THE PROPERTY OF THE ARCHITECT. THE DESIGNS SHOWN AND DESCRIBED HERIN INCLUDING ALL TECHNICAL DRAWINGS ARE PROPRIETARY AND CANNOT BE COPIED, DUPLICATED OR COMMERCIALLY EXPLOITED IN WHOLE OR IN PART. THE DRAWINGS AND SPECIFICATIONS SHALL NOT BE USED BY THE OWNER ON OTHER PROJECTS, FOR ADDITIONS TO THIS PROJECT, OR FOR COMPLETION OF THIS PROJECT BY OTHERS. THE OWNER AGREES TO HOLD HARMLESS, INDEMNIFY AND DEFEND THE ARCHITECT AGAINST ALL DAMAGES, CLAIMS AND LOSSES, INCLUDING DEFENSE COSTS ARISING OUT OF ANY REUSE OF THE PLANS AND SPECIFICATIONS WITHOUT THE WRITTEN AUTHORIZATION OF THE ARCHITECT OF RECORD.

COPYRIGHT © 2022 CO-AR DESIGN, INC.
ALL RIGHTS RESERVED

SEAL

LICENSED ARCHITECT
DENNIS JOON HO LEE
C-29168
4/30/2023
RENEWAL DATE
STATE OF CALIFORNIA

NOTES

PROJECT

SALTALK FREMONT KITCHEN TENANT IMPROVEMENT

42550 ALBRAE ST.,
FREMONT, CA 94538

CLIENT

SALTALK, INC.
3334 VICTOR CT.,
SANTA CLARA, CA 95054

SUBMITTALS / REVISIONS

4	1ST PLANNING SUBMITTAL		2/10/22
5	SD		3/7/22
6	1ST HEALTH SUBMITTAL		4/7/22
7	1ST BLDG SUBMITTAL		4/11/22
8	2ND BLDG SUBMITTAL	1	7/29/22
9	3RD USD SUBMITTAL	3	9/12/22
10	2ND HEALTH SUBMITTAL	4	xx/xx/22
11	3RD BLDG SUBMITTAL	5	xx/xx/22

PROJECT NO.	202201
SCALE	AS SHOWN
DATE	10/4/2022
DRAWN BY	ED / FW
CHECKED BY	DL

SHEET TITLE

EXISTING / DEMO ROOF PLAN

SHEET

A-2.6

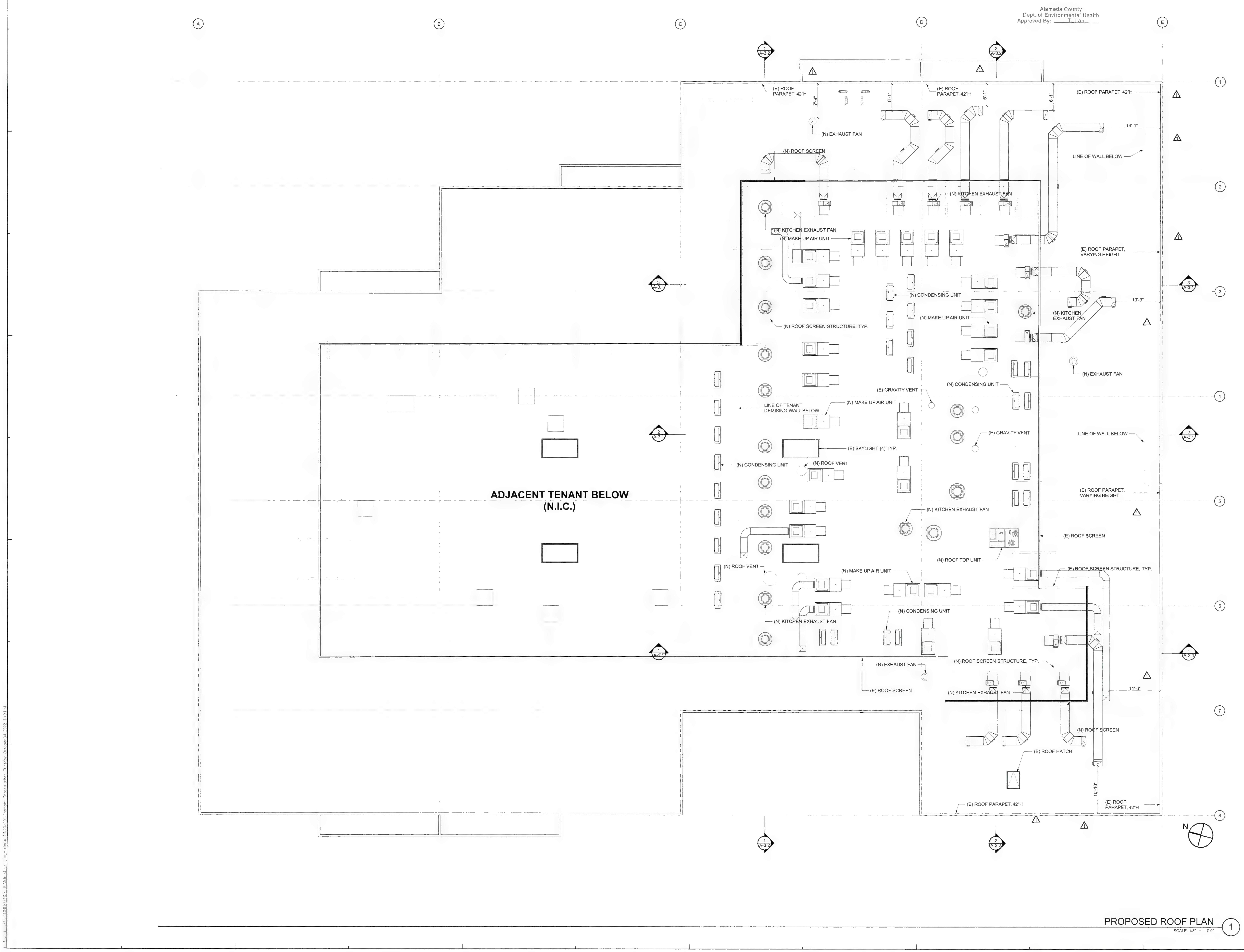

PROPOSED ROOF PLAN 1
SCALE: 1/8" = 1'-0"

CO-AR DESIGN, INC.
680 Brea Canyon Rd., Ste. 178
Diamond Bar, CA 91789

Office: 909-598-0186
http:\\www.coardesign.com

Dennis J. Lee, Architect
dennisl@coardesign.com

THESE DRAWINGS ARE THE PROPERTY OF THE ARCHITECT. THE DESIGNS SHOWN AND DESCRIBED HEREIN INCLUDING ALL TECHNICAL DRAWINGS ARE PROPRIETARY AND CANNOT BE COPIED, DUPLICATED OR COMMERCIALLY EXPLOITED IN WHOLE OR IN PART. THE DRAWINGS AND SPECIFICATIONS SHALL NOT BE USED BY THE OWNER ON OTHER PROJECTS, FOR ADDITIONS TO THIS PROJECT, OR FOR COMPLETION OF THIS PROJECT BY OTHERS. THE OWNER AGREES TO HOLD HARMLESS, INDEMNIFY AND DEFEND THE ARCHITECT AGAINST ALL DAMAGES, CLAIMS AND LOSSES, INCLUDING DEFENSE COSTS, ARISING OUT OF ANY REUSE OF THE PLANS AND SPECIFICATIONS WITHOUT THE WRITTEN AUTHORIZATION OF THE ARCHITECT OF RECORD.

COPYRIGHT © 2022 CO-AR DESIGN, INC.
ALL RIGHTS RESERVED

SEAL
LICENSED ARCHITECT
DENNIS JOON HO LEE
C-29168
4/30/2023
RENEWAL DATE
STATE OF CALIFORNIA

NOTES

PROJECT
SALTALK FREMONT KITCHEN TENANT IMPROVEMENT

42550 ALBRAE ST.,
FREMONT, CA 94538

SALTALK, INC.
3334 VICTOR CT.,
SANTA CLARA, CA 95054

SUBMITTALS/REVISIONS

4	1ST PLANNING SUBMITTAL		2/10/22
5	SD		3/7/22
6	1ST HEALTH SUBMITTAL		4/7/22
7	1ST BLDG SUBMITTAL		4/11/22
8	2ND BLDG SUBMITTAL	1	7/29/22
9	3RD USD SUBMITTAL	3	9/12/22
10	2ND HEALTH SUBMITTAL	4	xx/xx/22
11	3RD BLDG SUBMITTAL	5	xx/xx/22

PROJECT NO	202201
SCALE	AS SHOWN
DATE	10/4/2022
DRAWN BY	ED / FW
CHECKED BY	DL

SHEET TITLE
PROPOSED ROOF PLAN

SHEET NO
A-2.7

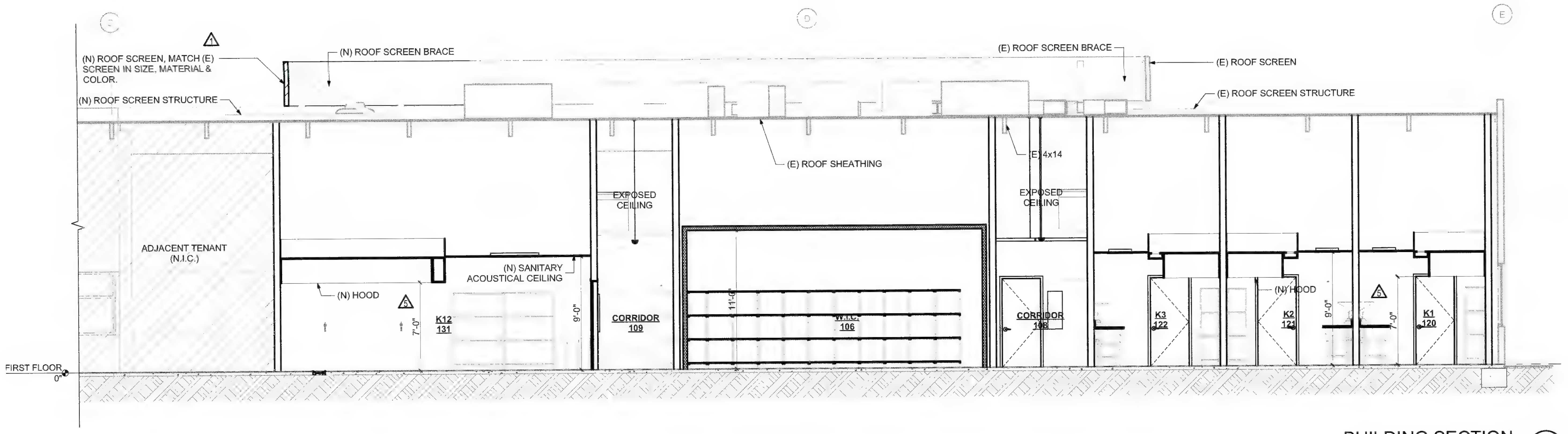

BUILDING SECTION 3
SCALE: 3/16" = 1'-0"

Alameda County
Dept. of Environmental Health
Approved By: T. Tran

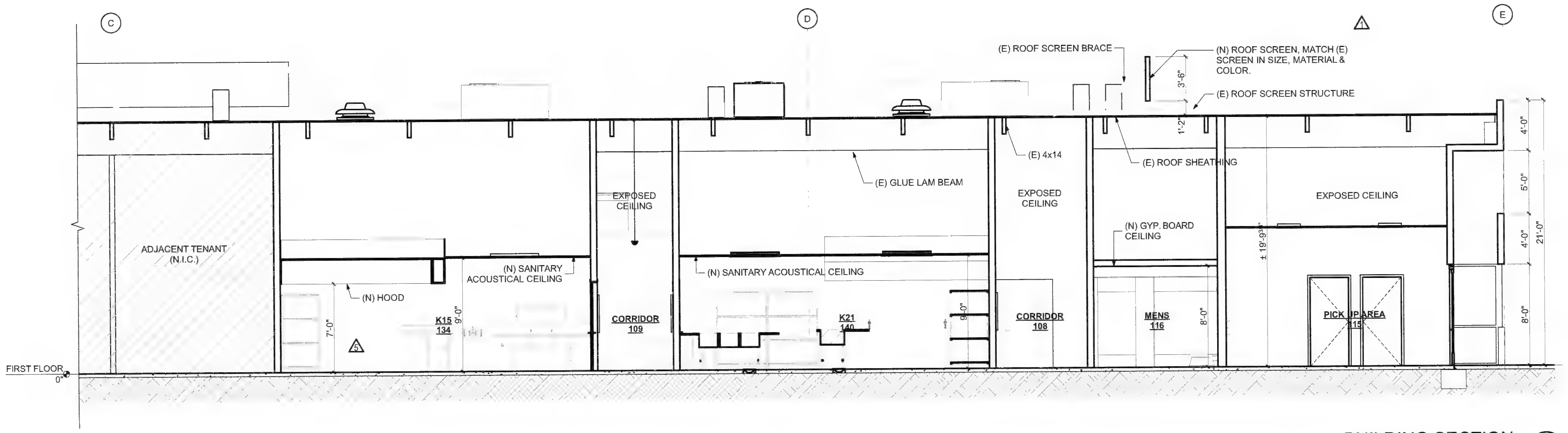

BUILDING SECTION 2
SCALE: 3/16" = 1'-0"

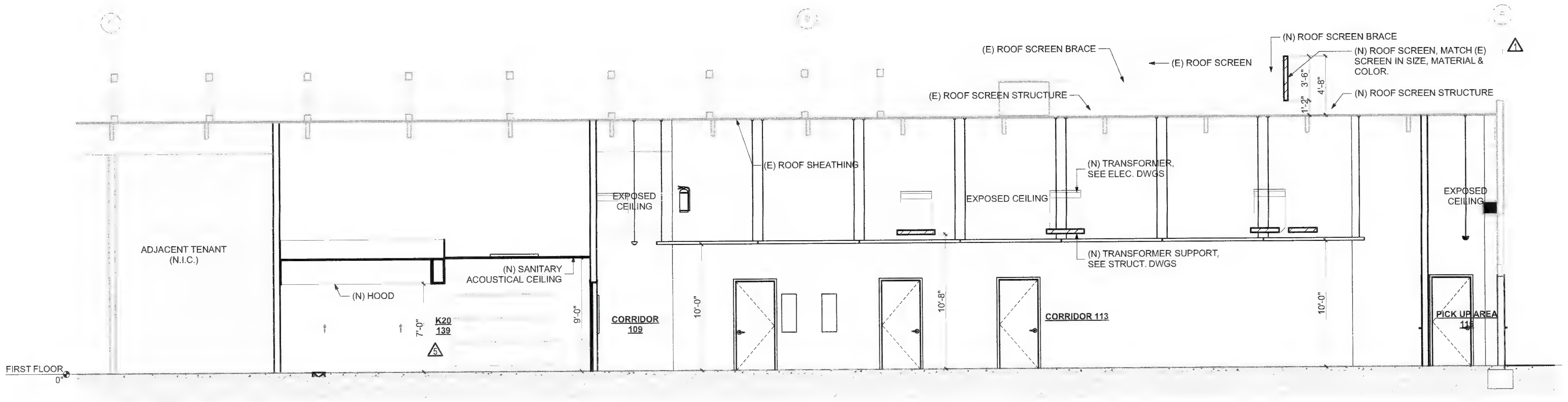

BUILDING SECTION 1
SCALE: 3/16" = 1'-0"

CO-AR DESIGN, INC.
680 Brea Canyon Rd., Ste. 178
Diamond Bar, CA 91789

Office: 909-598-0186
http:\\www.coardesign.com

Dennis J. Lee, Architect
dennisl@coardesign.com

THESE DRAWINGS ARE THE PROPERTY OF THE ARCHITECT. THE DESIGNS SHOWN AND DESCRIBED HERIN INCLUDING ALL TECHNICAL DRAWINGS ARE PROPRIETARY AND CANNOT BE COPIED, DUPLICATED OR COMMERCIALLY EXPLOITED, IN WHOLE OR IN PART. THE DRAWINGS AND SPECIFICATIONS SHALL NOT BE USED BY THE OWNER ON OTHER PROJECTS, FOR ADDITIONS TO THIS PROJECT, OR FOR COMPLETION OF THIS PROJECT BY OTHERS. THE OWNER AGREES TO HOLD HARMLESS, INDEMNIFY AND DEFEND THE ARCHITECT AGAINST ALL DAMAGES, CLAIMS AND LOSSES, INCLUDING DEFENSE COSTS, ARISING OUT OF ANY REUSE OF THE PLANS AND SPECIFICATIONS WITHOUT THE WRITTEN AUTHORIZATION OF THE ARCHITECT OF RECORD.

COPYRIGHT © 2022 CO AR DESIGN, INC
ALL RIGHTS RESERVED

SEAL

LICENSED ARCHITECT
DENNIS JOON HO LEE
C-29168
4/30/2023
RENEWAL DATE
STATE OF CALIFORNIA

NOTES

PROJECT
SALTALK FREMONT KITCHEN TENANT IMPROVEMENT

42550 ALBRAE ST.,
FREMONT, CA 94538

CLIENT

SALTALK, INC.
3334 VICTOR CT.,
SANTA CLARA, CA 95054

SUBMITTALS/ REVISIONS

4	1ST PLANNING SUBMITTAL		2/10/22
5	SD		3/7/22
6	1ST HEALTH SUBMITTAL		4/7/22
7	1ST BLDG SUBMITTAL		4/11/22
8	2ND BLDG SUBMITTAL	1	7/29/22
9	3RD USD SUBMITTAL	3	9/12/22
10	2ND HEALTH SUBMITTAL	4	xx/xx/22
11	3RD BLDG SUBMITTAL	5	xx/xx/22

PROJECT NO	202201
SCALE	AS SHOWN
DATE	10/4/2022
DRAWN BY	ED / FW
CHECKED BY	DL

SHEET TITLE
BUILDING SECTIONS

SHEET NO
A-3.1

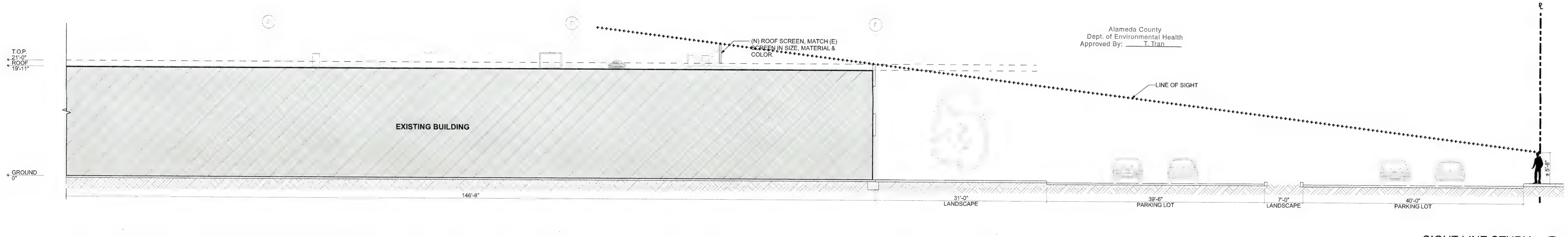

SIGHT LINE STUDY 4
SCALE: 1/8" = 1'-0"

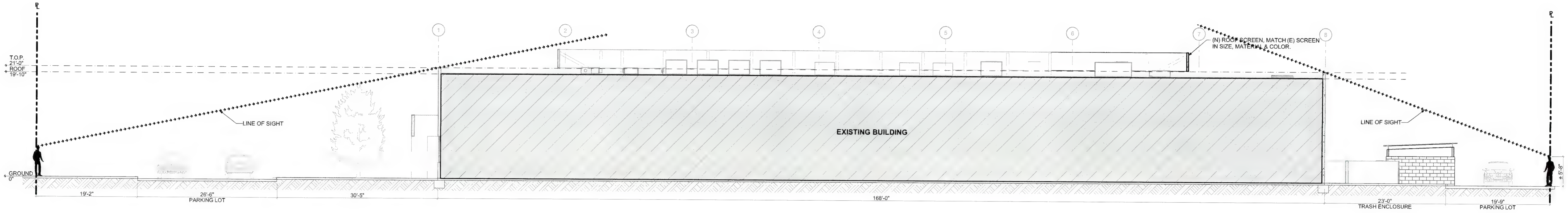

SIGHT LINE STUDY 3
SCALE: 1/8" = 1'-0"

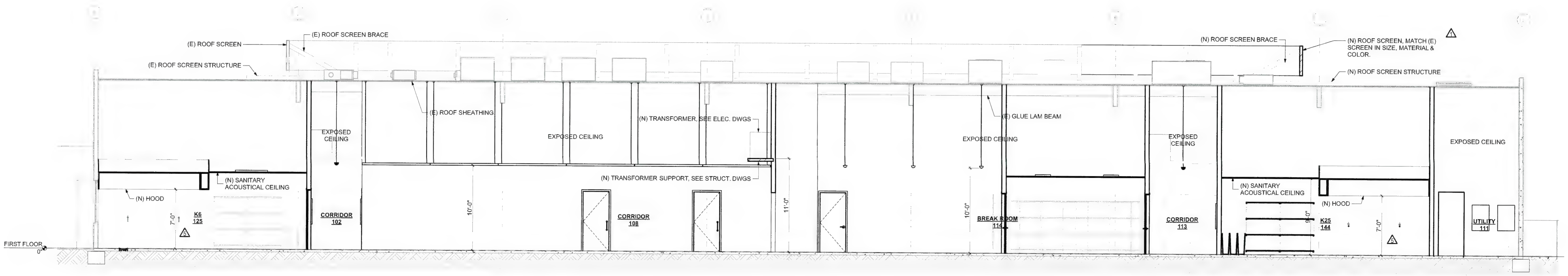

BUILDING SECTION 2
SCALE: 3/16" = 1'-0"

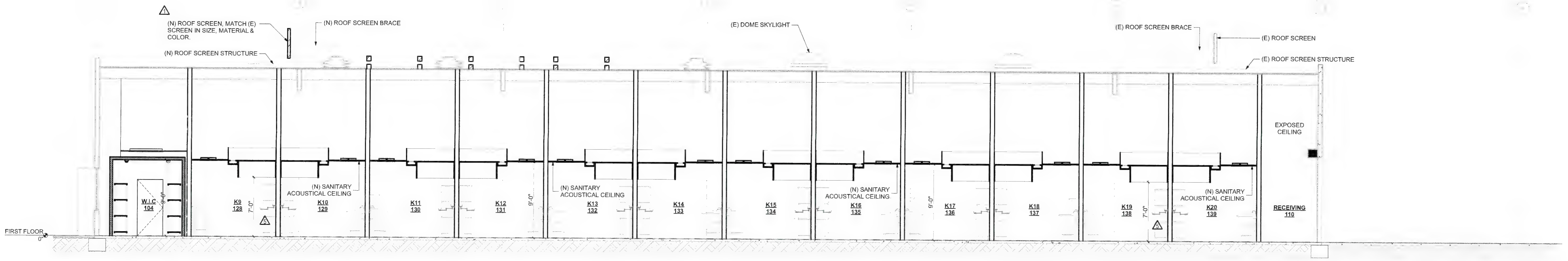

BUILDING SECTION 1
SCALE: 3/16" = 1'-0"

CO-AR DESIGN, INC.
680 Brea Canyon Rd., Ste. 178
Diamond Bar, CA 91789

Office: 909-598-0186
http:\\www.coardesign.com

Dennis J. Lee, Architect
dennisl@coardesign.com

THESE DRAWINGS ARE THE PROPERTY OF THE ARCHITECT. THE DESIGNS SHOWN AND DESCRIBED HERIN INCLUDING ALL TECHNICAL DRAWINGS ARE PROPRIETARY AND CANNOT BE COPIED, DUPLICATED OR COMMERCIALLY EXPLOITED, IN WHOLE OR IN PART. THE DRAWINGS AND SPECIFICATIONS SHALL NOT BE USED BY THE OWNER ON OTHER PROJECTS, FOR ADDITIONS TO THIS PROJECT, OR FOR COMPLETION OF THIS PROJECT BY OTHERS. THE OWNER AGREES TO HOLD HARMLESS, INDEMNIFY AND DEFEND THE ARCHITECT AGAINST ALL DAMAGES, CLAIMS AND LOSSES, INCLUDING DEFENSE COSTS, ARISING OUT OF ANY REUSE OF THE PLANS AND SPECIFICATIONS WITHOUT THE WRITTEN AUTHORIZATION OF THE ARCHITECT OF RECORD

COPYRIGHT © 2022 CO-AR DESIGN, INC., ALL RIGHTS RESERVED

SEAL

LICENSED ARCHITECT
DENNIS JOON HO LEE
C-29168
4/30/2023
STATE OF CALIFORNIA

NOTES

PROJECT

SALTALK FREMONT KITCHEN TENANT IMPROVEMENT

42550 ALBRAE ST.,
FREMONT, CA 94538

CLIENT

SALTALK, INC.
3334 VICTOR CT.,
SANTA CLARA, CA 95054

SUBMITTALS/ REVISIONS

4	1ST PLANNING SUBMITTAL		2/10/22
5	SD		3/7/22
6	1ST HEALTH SUBMITTAL		4/7/22
7	1ST BLDG SUBMITTAL		4/11/22
8	2ND BLDG SUBMITTAL	1	7/29/22
9	3RD USD SUBMITTAL	3	9/12/22
10	2ND HEALTH SUBMITTAL	4	xx/xx/22
11	3RD BLDG SUBMITTAL	5	xx/xx/22

PROJECT NO	202201
SCALE	AS SHOWN
DATE	10/4/2022
DRAWN BY:	ED / FW
CHECKED BY	DL

SHEET TITLE

BUILDING SECTIONS

SHEET NO

A-3.2

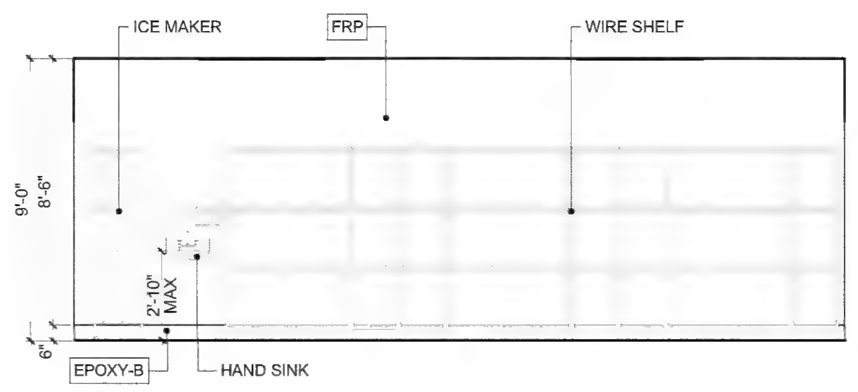

107 STORAGE East (13)
SCALE: 1/4" = 1'-0"

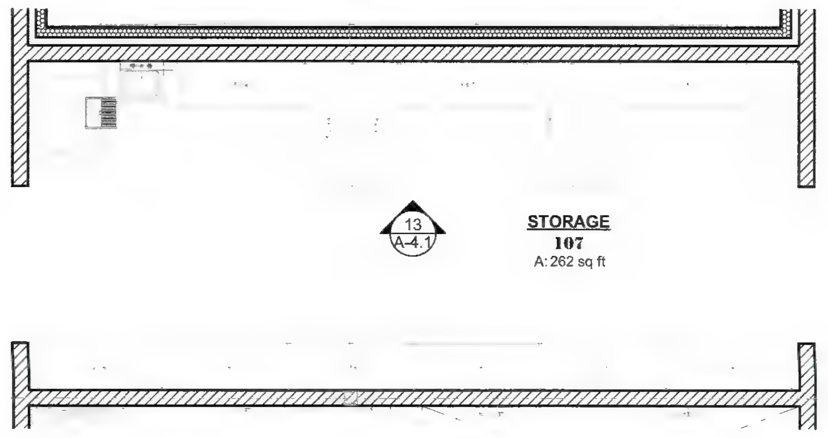

STORAGE 107 ENLARGED PLAN (12)
SCALE: 1/4" = 1'-0"

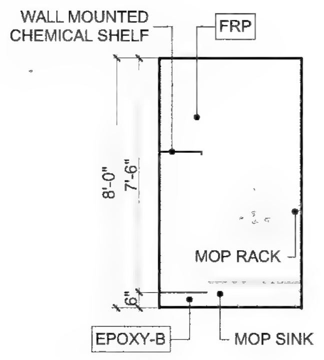

110A JAN South (11)
SCALE: 1/4" = 1'-0"

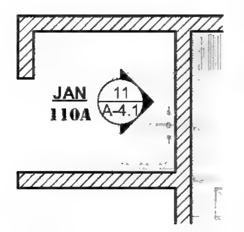

JAN 110A ENLARGED PLAN (10)
SCALE: 1/4" = 1'-0"

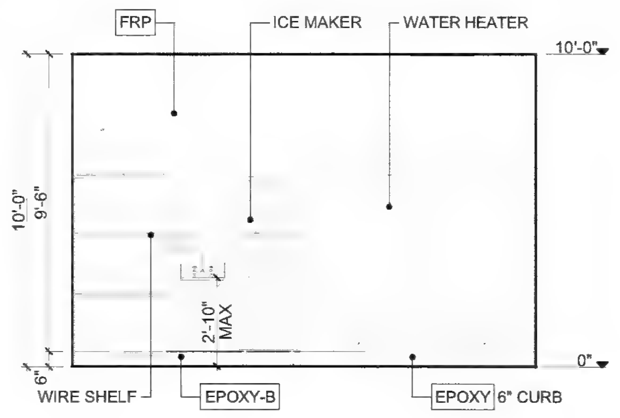

JAN 103 East (9)
SCALE: 1/4" = 1'-0"

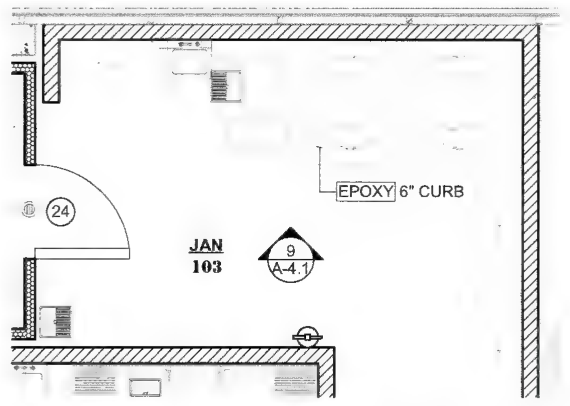

JAN 103 ENLARGED PLAN (8)
SCALE: 1/4" = 1'-0"

MATERIAL SCHEDULE

FLOOR FINISH

EPOXY	EPOXY FLOORING, MINIMUM 1/4" THICKNESS (SMOOTH FINISH UNDER EQUIPMENTS, SLIGHTLY TEXTURED @ WALKWAYS) **'ARMORPOXY'**, ARMOR ULTRA (LOW VOC), COLOR: LIGHT GREY CONTACT: GREG WEINER, 908.810.9613, greg@armorpoxy.com
EPOXY-B	6" SEALED SEAMLESS POLYCRETE COVE BASE WITH 3/8" RADIUS (COMPLETELY SMOOTH FINISH)
INS	INSULATED FLOOR WITH EPOXY FINISH

PAINT (SEMI-GLOSS PAINT @ SERVICE AREA & RESTROOM)

PT-1	SEMI GLOSS PAINT (WHITE) **'SHERWIN WILLIAMS'**, SW005 PURE WHITE
PT-2	LOW SHEEN PAINT (LIGHT GRAY) **'SHERWIN WILLIAMS'**, SW0055 LIGHT FRENCH GRAY

WALL / CEILING FINISH

FRP	FIBER REINFORCEMENT PANEL (WHITE)
SS	STAINLESS STEEL PANEL
T-1	3"x12" CERAMIC SUBWAY TILE **'ARIZONA TILE'**, MODEL: BARE, WHITE, SIZE: 3"x12" / 50% OFFSET CONTACT: ED AHRENS, 562.896.2832, eahrens@arizonatile.com

TRANSITION TRIM

ET-1	STAINLESS STEEL 'U' ANGLE, 'L' ANGLE
ET-2	METAL EDGE TRIM **'SCHLUTER'**, JOLLY-A125ACGB, BRUSHED CHROME

Alameda County
Dept. of Environmental Health
Approved By: T. Tran

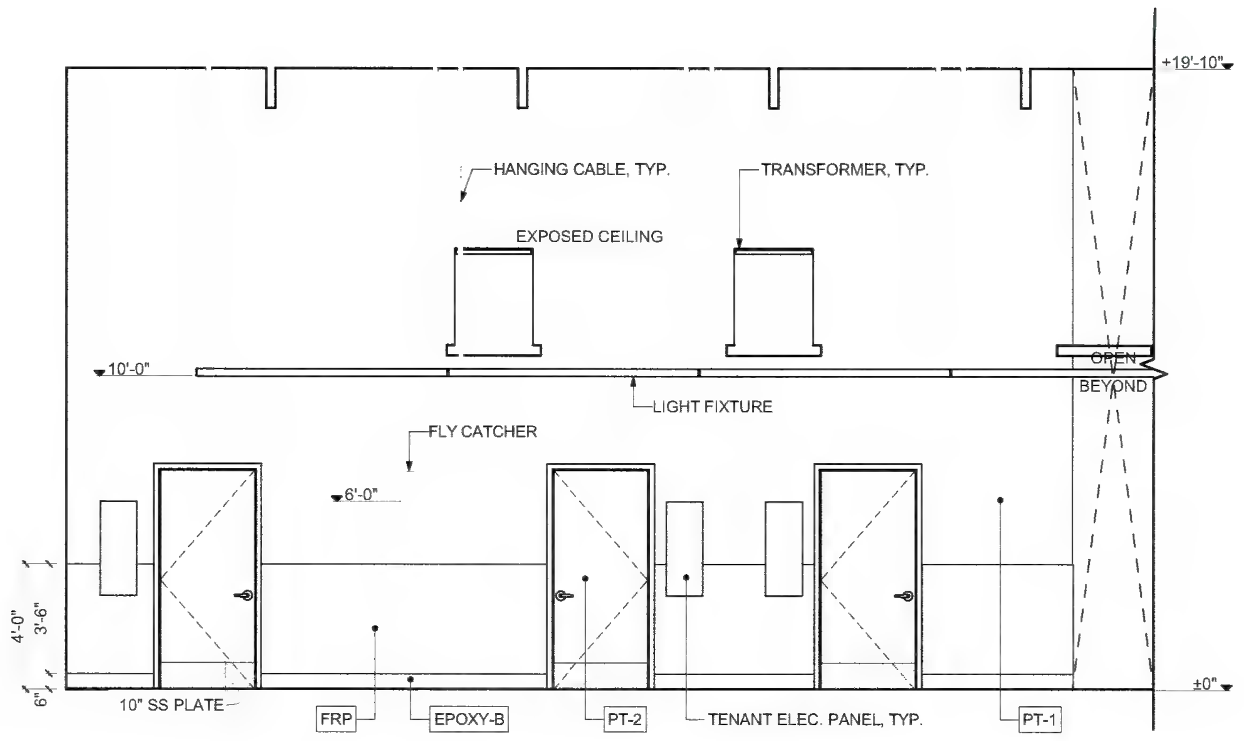

CORRIDOR ELEVATION, TYP. (7)
SCALE: 1/4" = 1'-0"

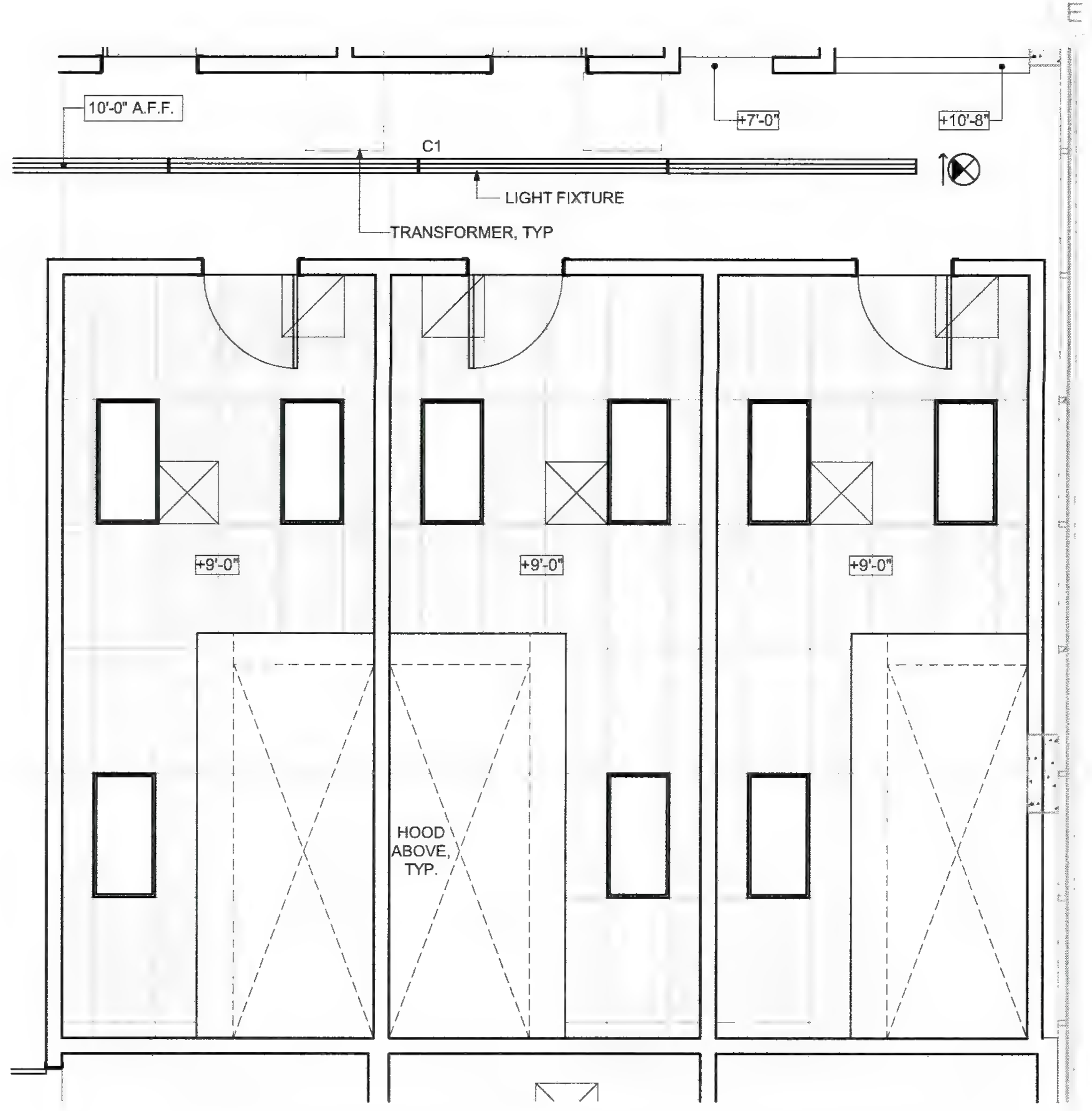

REFLECTED CEILING PLAN - PROTOYPE, TYP. (2)
SCALE: 1/4" = 1'-0"

EGRESS / ACCESSIBILITY NOTES:

ALL FUTURE KITCHEN EQUIPMENT SHALL BE LOCATED TO PROVIDE EGRESS AND ACCESSIBLE ROUTE CLEARANCES THROUGHT EACH PRIVATE KITCHEN AREAS. THE CLEAR WIDTH FOR AISLES SHALL BE 36 INCHES WHEN SERVING ELEMENTS ON ONE SIDE, 44" MINIMUM IF SERVING ELEMENTS ON BOTH SIDES. (CBC 11B-403.5)

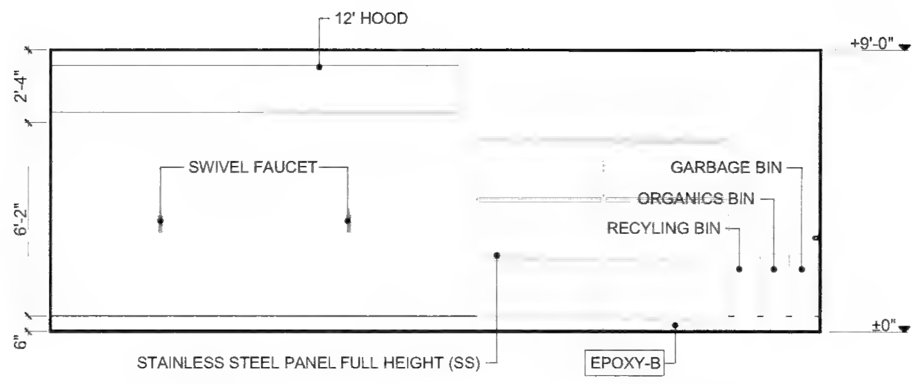

ELEV. KITCHEN PROTOTYPE, TYP. (6)
SCALE: 1/4" = 1'-0"

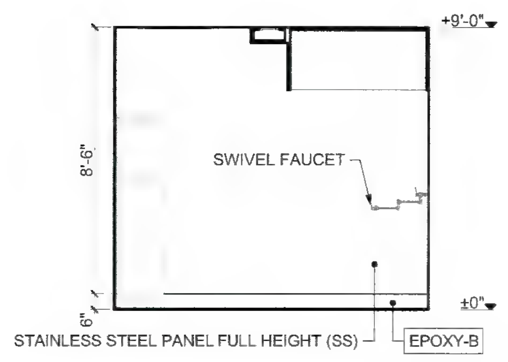

ELEV. KITCHEN PROTOTYPE, TYP. (5)
SCALE: 1/4" = 1'-0"

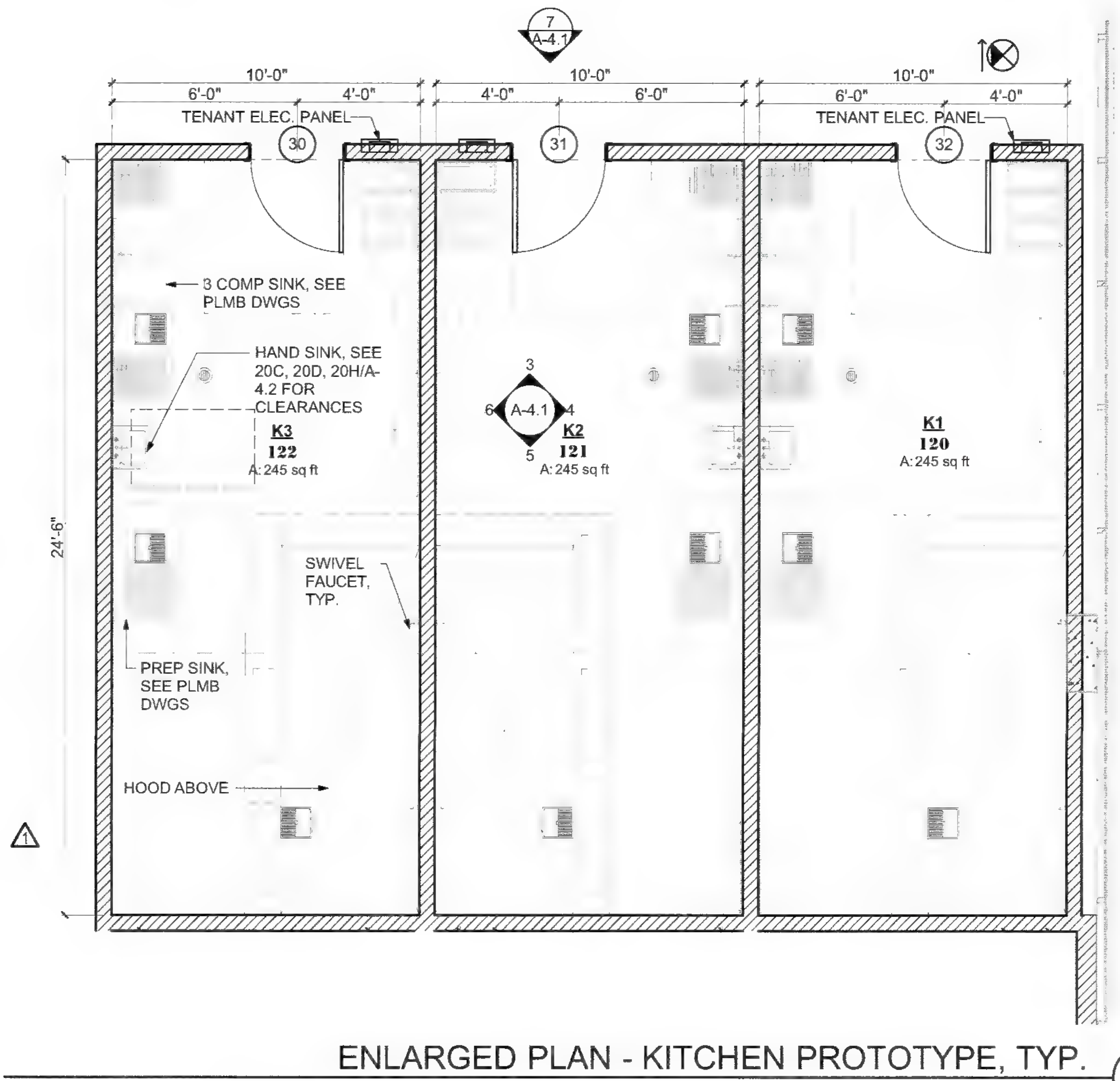

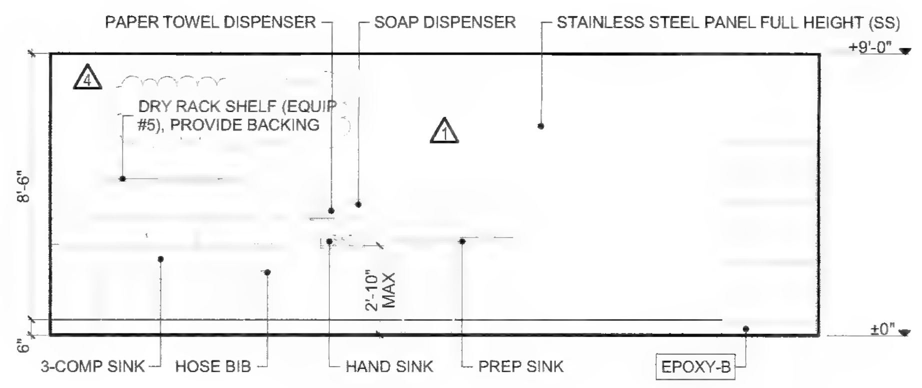

ELEV. KITCHEN PROTOTYPE, TYP. (4)
SCALE: 1/4" = 1'-0"

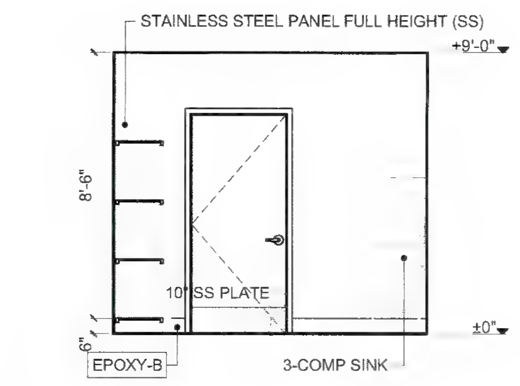

ELEV. KITCHEN PROTOTYPE, TYP. (3)
SCALE: 1/4" = 1'-0"

ENLARGED PLAN - KITCHEN PROTOTYPE, TYP. (1)
SCALE: 1/4" = 1'-0"

CO-AR DESIGN, INC.
680 Brea Canyon Rd., Ste. 178
Diamond Bar, CA 91789

Office: 909-598-0186
http:\\www.coardesign.com

Dennis J. Lee, Architect
dennisl@coardesign.com

THESE DRAWINGS ARE THE PROPERTY OF THE ARCHITECT. THE DESIGNS SHOWN AND DESCRIBED HERIN INCLUDING ALL TECHNICAL DRAWINGS ARE PROPRIETARY AND CANNOT BE COPIED, DUPLICATED OR COMMERCIALLY EXPLOITED, IN WHOLE OR IN PART. THE DRAWINGS AND SPECIFICATIONS SHALL NOT BE USED BY THE OWNER ON OTHER PROJECTS, FOR ADDITIONS TO THIS PROJECT, OR FOR COMPLETION OF THIS PROJECT BY OTHERS. THE OWNER AGREES TO HOLD HARMLESS, INDEMNIFY AND DEFEND THE ARCHITECT AGAINST ALL DAMAGES, CLAIMS AND LOSSES, INCLUDING DEFENSE COSTS, ARISING OUT OF ANY REUSE OF THE PLANS AND SPECIFICATIONS WITHOUT THE WRITTEN AUTHORIZATION OF THE ARCHITECT OF RECORD.

COPYRIGHT © 2022 CO-AR DESIGN, INC., ALL RIGHTS RESERVED

SEAL

LICENSED ARCHITECT
DENNIS JOON HO LEE
C-29168
4/30 / 2023
RENEWAL DATE
STATE OF CALIFORNIA

NOTES

PROJECT

SALTALK FREMONT KITCHEN TENANT IMPROVEMENT

42550 ALBRAE ST.,
FREMONT, CA 94538

CLIENT

SALTALK, INC.
3334 VICTOR CT.,
SANTA CLARA, CA 95054

SUBMITTALS/ REVISIONS

4	1ST PLANNING SUBMITTAL		2/10/22
5	SD		3/7/22
6	1ST HEALTH SUBMITTAL		4/7/22
7	1ST BLDG SUBMITTAL		4/11/22
8	2ND BLDG SUBMITTAL	1	7/29/22
9	3RD USD SUBM TTAL	3	9/12/22
10	2ND HEALTH SUBMITTAL	4	xx/xx/22
11	3RD BLDG SUBMITTAL	5	xx/xx/22

PROJECT NO	202201
SCALE	AS SHOWN
DATE	10/4/2022
DRAWN BY	ED / FW
CHECKED BY	DL

SHEET TITLE

ENLARGED KITCHEN PROTOTYPE

SHEET NO

A-4.1

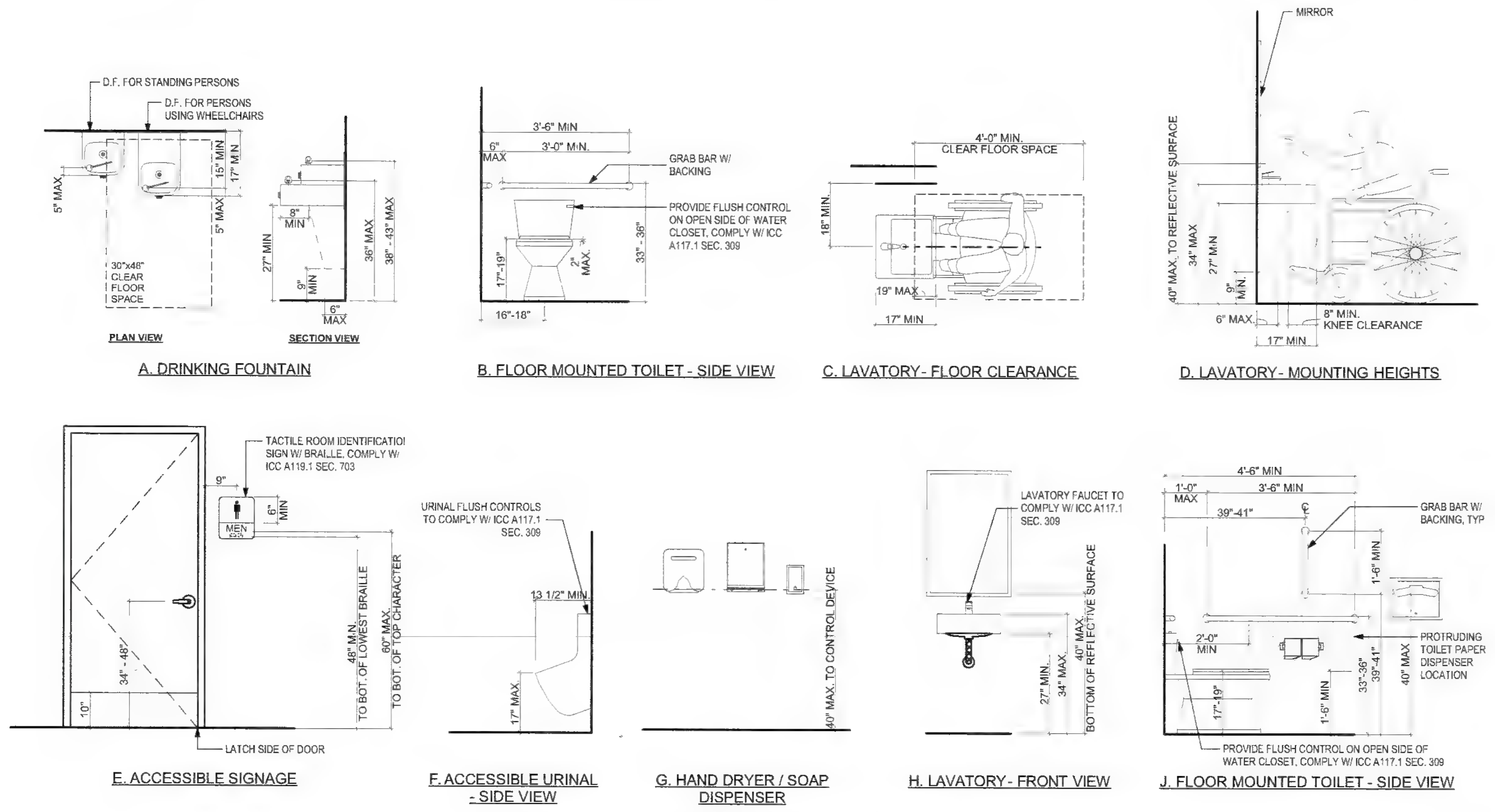

A. DRINKING FOUNTAIN
B. FLOOR MOUNTED TOILET - SIDE VIEW
C. LAVATORY - FLOOR CLEARANCE
D. LAVATORY - MOUNTING HEIGHTS
E. ACCESSIBLE SIGNAGE
F. ACCESSIBLE URINAL - SIDE VIEW
G. HAND DRYER / SOAP DISPENSER
H. LAVATORY - FRONT VIEW
J. FLOOR MOUNTED TOILET - SIDE VIEW

STANDARD ACCESSIBLE MOUNTING HEIGHTS AND CLEARANCES (20)
NOT TO SCALE

RESTROOM KEYNOTE LEGEND:

01	TOILET PARTITION - STAINLESS STEEL (HEADRAIL BRACED)
02	42" MIN STAINLESS STEEL GRAB BAR, SEE 15/A-5.1
03	36" MIN STAINLESS STEEL GRAB BAR, SEE 15/A-5.1
04	SURFACE MOUNTED SOAP DISPENSER, **'BOBRICK'** - *CLASSIC SERIES*, B-2111
05	SURFACE MOUNTED SEAT COVER DISPENSER, **'BOBRICK'** - *CLASSIC SERIES*, B-221
06	SURFACE MOUNTED TOILET TISSUE DISPENSER (2 ROLLS) **'BOBRICK'** - *CLASSIC SERIES*, B-265
07	WALL MOUNTED MIRROR (18"X30"MIN., 40" MAX A.F.F. TO REFLECTIVE SURFACE) **'BOBRICK'** - *CHANNEL FRAME*, B-165 2436 @ KITCHEN RESTROOMS. CUSTOM SIZE @ PUBLIC RESTROOMS, SEE ELEV.
~~08~~	~~RECESSED PAPER TOWEL DISPENSER & WASTE RECEPTACLE **'BOBRICK'** - *CLASSIC SERIES*, B-3961~~
09	ACCESIBLE WATER CLOSET
10	PROVIDE HYDRAULIC ASSIST TO REQUIRE NOT MORE THAN 5LBS TO OPEN
11	HOT WATER, COLD WATER AND DRAIN PIPE TO BE INSULATED
12	WALL-MOUNT RESTROOM SINK @ KITCHEN RESTROOMS
13	SOLID SURFACE COUNTERTOP W/ DROP IN HAND SINKS
14	~~WALL MOUNTED DIAPER CHANGING STATION **'KOALA KARE'**, *KB200, GREY*~~ (1)
15	ACCESSIBLE URINAL - WALL HUNG
16	HAND DRYER - 'XLERATOR'-MODEL XL-SB., PROVIDE 40502 RECESS KIT, MAX. PROJECTION FROM WALL SHALL BE 4". (1)
17	BACKING FOR GRAB BAR, SEE 15/A-5.1
18	PROVIDE NEW ACCESSIBLE RESTROOM WALL SIGN SEE 2/A-5.1, SIGN C, E OR G
19	PROVIDE NEW ACCESSIBLE RESTROOM DOOR SIGN SEE 2/A-5.1, SIGN B & D

MATERIAL SCHEDULE

FLOOR FINISH

EPOXY	EPOXY FLOORING, MINIMUM 1/4" THICKNESS (SMOOTH FINISH UNDER EQUIPMENTS, SLIGHTLY TEXTURED @ WALKWAYS) **'ARMORPOXY'**, ARMOR ULTRA (LOW VOC), COLOR: LIGHT GREY CONTACT: GREG WEINER, 908.810.9613, greg@armorpoxy.com
EPOXY-B	6" SEALED SEAMLESS POLYCRETE COVE BASE WITH 3/8" RADIUS (COMPLETELY SMOOTH FINISH)
INS	INSULATED FLOOR WITH EPOXY FINISH

PAINT (SEMI-GLOSS PAINT @ SERVICE AREA & RESTROOM)

PT-1	SEMI GLOSS PAINT (WHITE) **'SHERWIN WILLIAMS'**, SW005 PURE WHITE
PT-2	LOW SHEEN PAINT (LIGHT GRAY) **'SHERWIN WILLIAMS'**, SW0055 LIGHT FRENCH GRAY

WALL / CEILING FINISH

FRP	FIBER REINFORCEMENT PANEL (WHITE)
SS	STAINLESS STEEL PANEL
T-1	3"x12" CERAMIC SUBWAY TILE **'ARIZONA TILE'**, MODEL: BARE, WHITE, SIZE: 3"x12" / 50% OFFSET CONTACT: ED AHRENS, 562.896.2832, eahrens@arizonatile.com

TRANSITION TRIM

ET-1	STAINLESS STEEL 'U' ANGLE, 'L' ANGLE
ET-2	METAL EDGE TRIM **'SCHLUTER'**, JOLLY-A125ACGB, BRUSHED CHROME

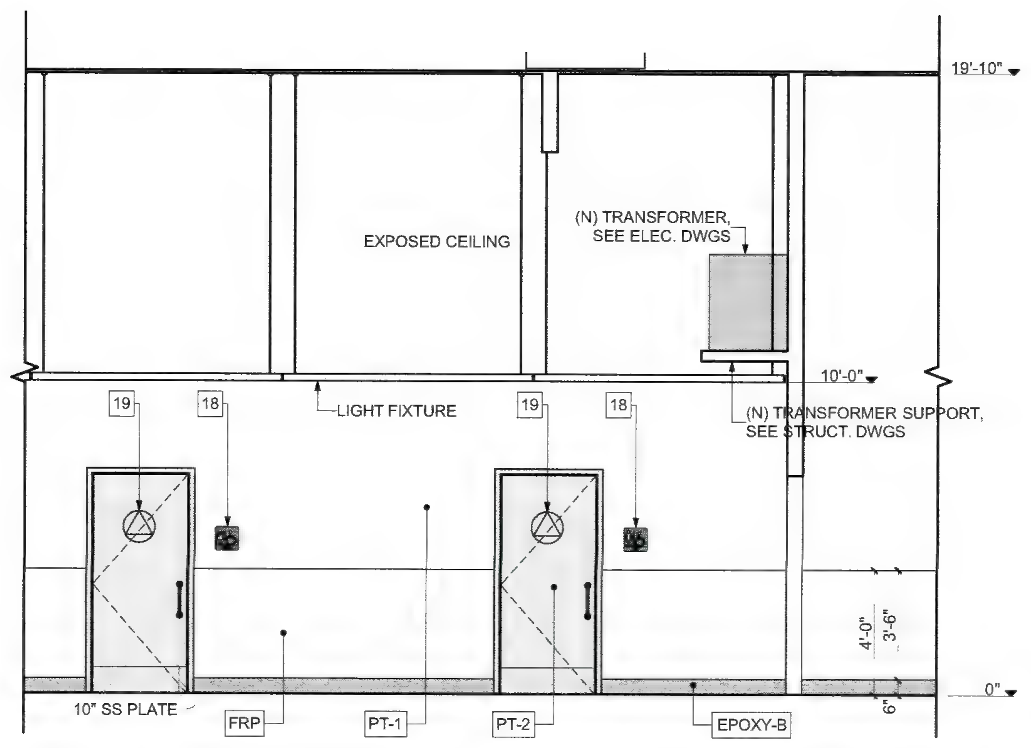

RESTROOM CORRIDOR ELEVATION (14)
SCALE: 1/4" = 1'-0"

Alameda County
Dept. of Environmental Health
Approved By: T Tran

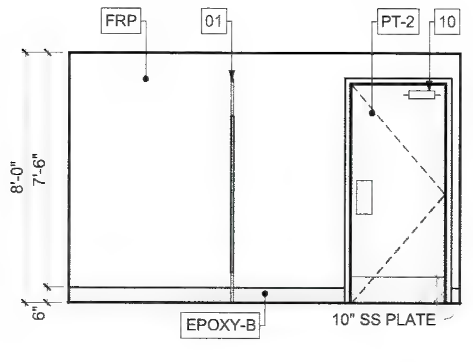

RESTROOM North, TYP. (13)
SCALE: 1/4" = 1'-0"

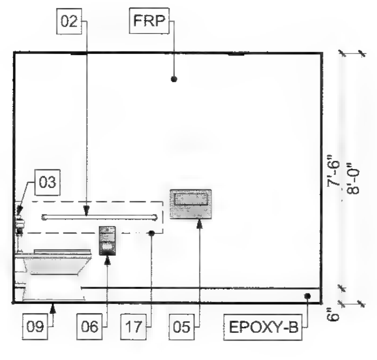

RESTROOM West, TYP. (12)
SCALE: 1/4" = 1'-0"

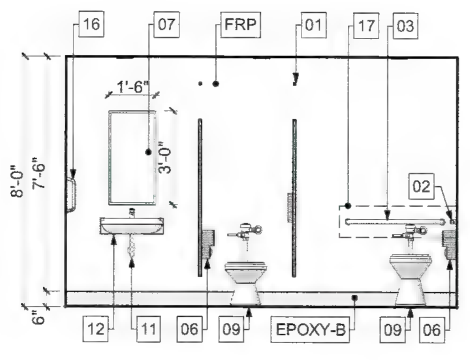

RESTROOM South, TYP. (11)
SCALE: 1/4" = 1'-0"

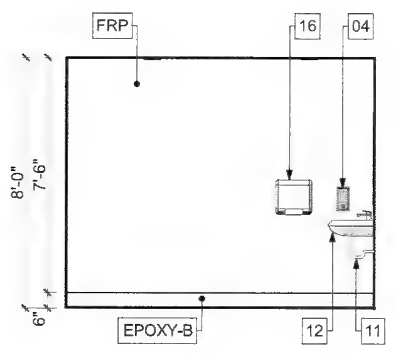

RESTROOM East, TYP. (10)
SCALE: 1/4" = 1'-0"

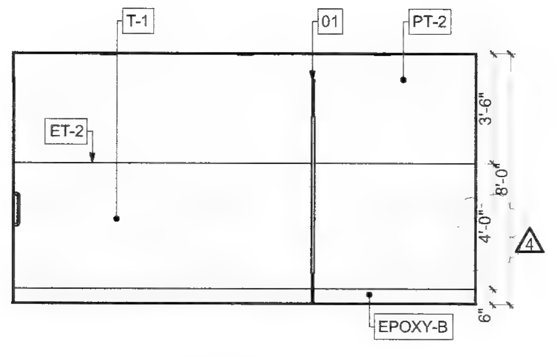

MEN'S 119 North (9)
SCALE: 1/4" = 1'-0"

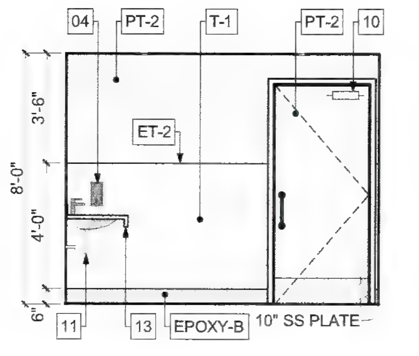

MEN'S 119 West (8)
SCALE: 1/4" = 1'-0"

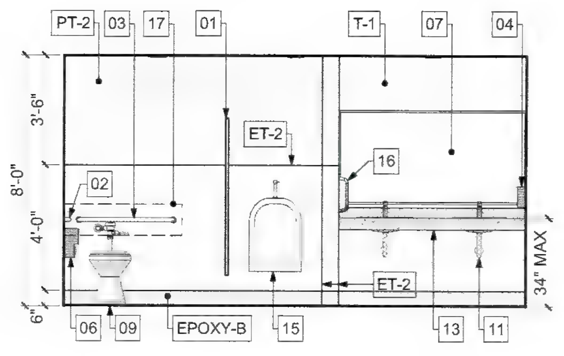

MEN'S 119 South (7)
SCALE: 1/4" = 1'-0"

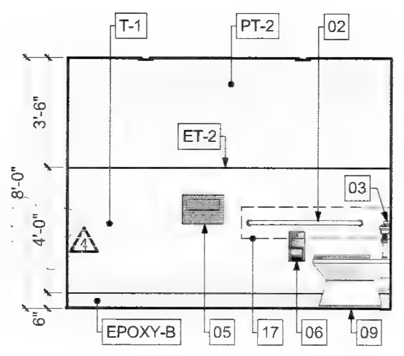

MEN'S 119 East (6)
SCALE: 1/4" = 1'-0"

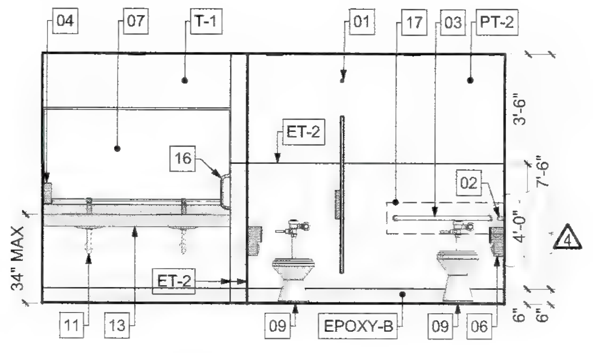

WOMEN'S 118 North (5)
SCALE: 1/4" = 1'-0"

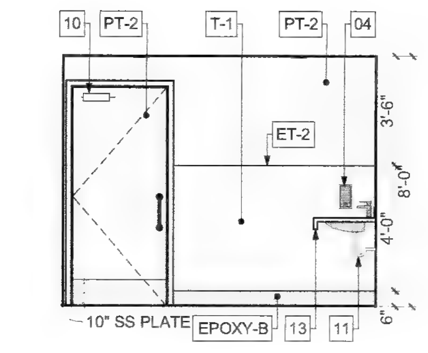

WOMEN'S 118 West (4)
SCALE: 1/4" = 1'-0"

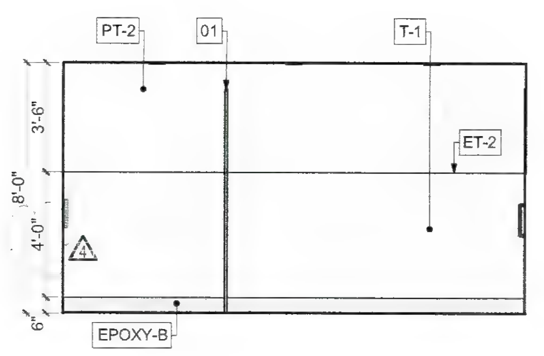

WOMEN'S 118 South (3)
SCALE: 1/4" = 1'-0"

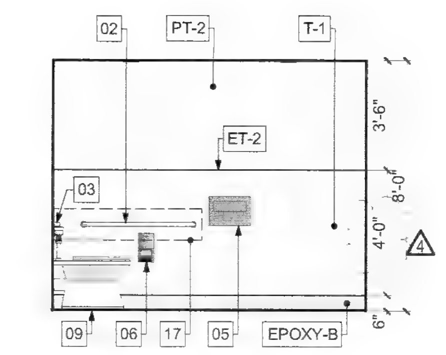

WOMEN'S 118 East (2)
SCALE: 1/4" = 1'-0"

ACCESSIBILITY NOTES:

REFER TO DETAIL 20 ON THIS SHEET FOR: 1) MOUNTING HEIGHTS OF ALL OPERABLE PARTS OF ACCESSORIES SUCH AS NAP DISPENSERS, WASTE RECEPTACLES, ETC. 2) WATER CLOSET SEAT MOUNTING HEIGHT AND CLEARANCE TO WALL PARTITIONS 3) MOUNTING HEIGHT AND LOCATION OF TOILET PAPER DISPENSER 4) HEIGHT AND KNEE / TOE CLEARANCES OF LAVATORIESAND SINK

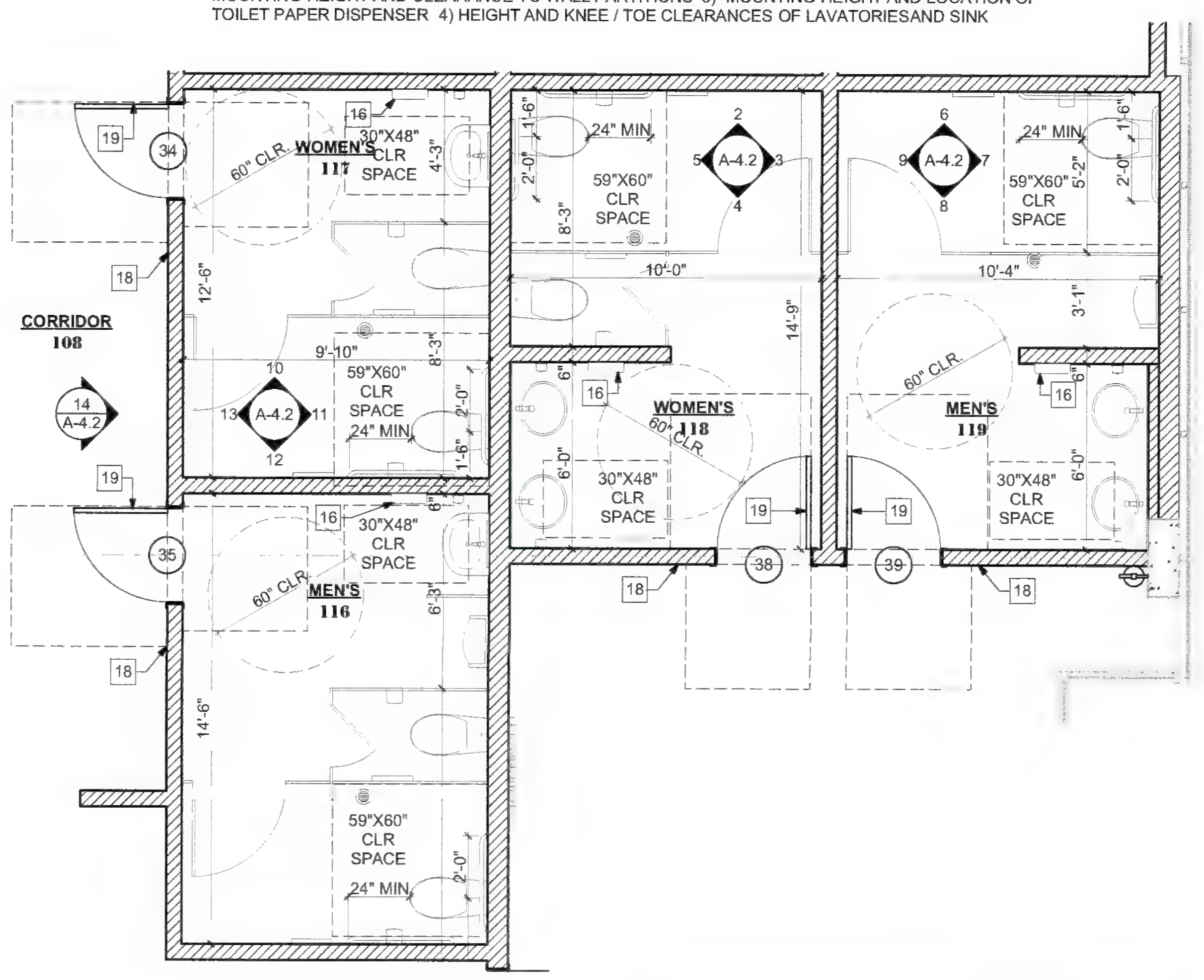

RESTROOM ENLARGED PLAN (1)
SCALE: 1/4" = 1'-0"

CO-AR DESIGN, INC.
680 Brea Canyon Rd., Ste. 178
Diamond Bar, CA 91789

Office: 909-598-0186
http:\\www.coardesign.com

Dennis J. Lee, Architect
dennisl@coardesign.com

THESE DRAWINGS ARE THE PROPERTY OF THE ARCHITECT. THE DESIGNS SHOWN AND DESCRIBED HERIN INCLUDING ALL TECHNICAL DRAWINGS ARE PROPRIETARY AND CANNOT BE COPIED, DUPLICATED OR COMMERCIALLY EXPLOITED, IN WHOLE OR IN PART. THE DRAWINGS AND SPECIFICATIONS SHALL NOT BE USED BY THE OWNER ON OTHER PROJECTS, FOR ADDITIONS TO THIS PROJECT OR FOR COMPLETION OF THIS PROJECT BY OTHERS. THE OWNER AGREES TO HOLD HARMLESS, INDEMNIFY AND DEFEND THE ARCHITECT AGAINST ALL DAMAGES, CLAIMS AND LOSSES, INCLUDING DEFENSE COSTS, ARISING OUT OF ANY REUSE OF THE PLANS AND SPECIFICATIONS WITHOUT THE WRITTEN AUTHORIZATION OF THE ARCHITECT OF RECORD

COPYRIGHT © 2022 CO-AR DESIGN, INC., ALL RIGHTS RESERVED

SEAL
LICENSED ARCHITECT
DENNIS JOON HO LEE
C-29168
4/30/2023
RENEWAL DATE
STATE OF CALIFORNIA

NOTES

PROJECT
SALTALK FREMONT KITCHEN TENANT IMPROVEMENT

42550 ALBRAE ST.,
FREMONT, CA 94538

CLIENT
SALTALK, INC.
3334 VICTOR CT.,
SANTA CLARA, CA 95054

SUBMITTALS/ REVISIONS

4	1ST PLANNING SUBMITTAL		2/10/22
5	SD		3/7/22
6	1ST HEALTH SUBMITTAL		4/7/22
7	1ST BLDG SUBMITTAL		4/11/22
8	2ND BLDG SUBMITTAL	1	7/29/22
9	3RD USD SUBMITTAL	3	9/12/22
10	2ND HEALTH SUBMITTAL	4	xx/xx/22
11	3RD BLDG SUBMITTAL	5	xx/xx/22

PROJECT NO	202201
SCALE	AS SHOWN
DATE	10/4/2022
DRAWN BY	ED / FW
CHECKED BY	DL

SHEET TITLE
RESTRM ENLARGED PLAN / INTERIOR ELEVATIONS

SHEET NO
A-4.2

MATERIAL SCHEDULE

FLOOR FINISH

EPOXY	EPOXY FLOORING, MINIMUM 1/4" THICKNESS (SMOOTH FINISH UNDER EQUIPMENTS, SLIGHTLY TEXTURED @ WALKWAYS) **'ARMORPOXY'**, ARMOR ULTRA (LOW VOC), COLOR: LIGHT GREY CONTACT: GREG WEINER, 908.810.9613, greg@armorpoxy.com
EPOXY-B	6" SEALED SEAMLESS POLYCRETE COVE BASE WITH 3/8" RADIUS (COMPLETELY SMOOTH FINISH)
INS	INSULATED FLOOR WITH EPOXY FINISH

PAINT (SEMI-GLOSS PAINT @ SERVICE AREA & RESTROOM)

PT-1	SEMI GLOSS PAINT (WHITE) **'SHERWIN WILLIAMS'**, SW005 PURE WHITE
PT-2	LOW SHEEN PAINT (LIGHT GRAY) **'SHERWIN WILLIAMS'**, SW0055 LIGHT FRENCH GRAY

WALL / CEILING FINISH

FRP	FIBER REINFORCEMENT PANEL (WHITE)
SS	STAINLESS STEEL PANEL
T-1	3"x12" CERAMIC SUBWAY TILE **'ARIZONA TILE'**, MODEL: BARE, WHITE, SIZE: 3"x12" / 50% OFFSET CONTACT: ED AHRENS, 562.896.2832, eahrens@arizonatile.com

TRANSITION TRIM

ET-1	STAINLESS STEEL 'U' ANGLE, 'L' ANGLE
ET-2	METAL EDGE TRIM **'SCHLUTER'**, JOLLY-A125ACGB, BRUSHED CHROME

Alameda County
Dept. of Environmental Health
Approved By: T. Tran

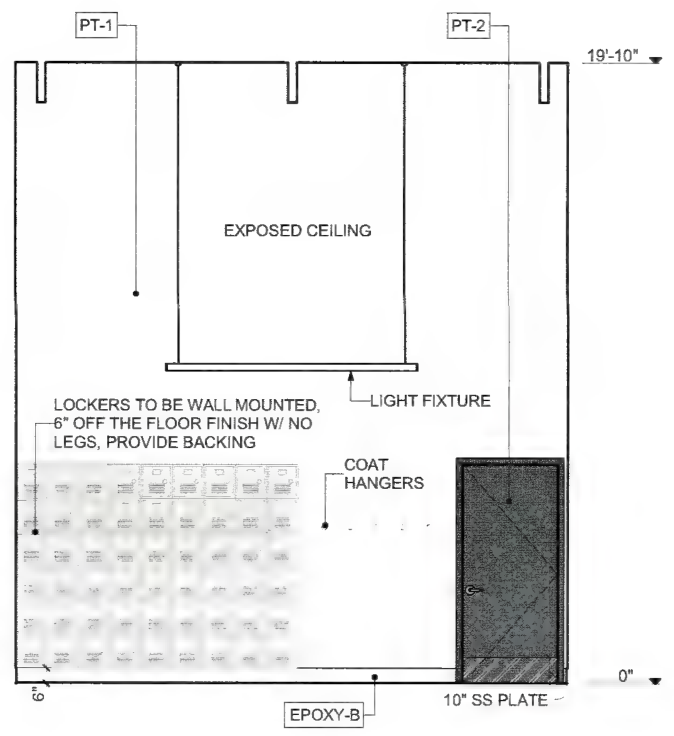

114 BREAK ROOM West (4)
SCALE: 1/4" = 1'-0"

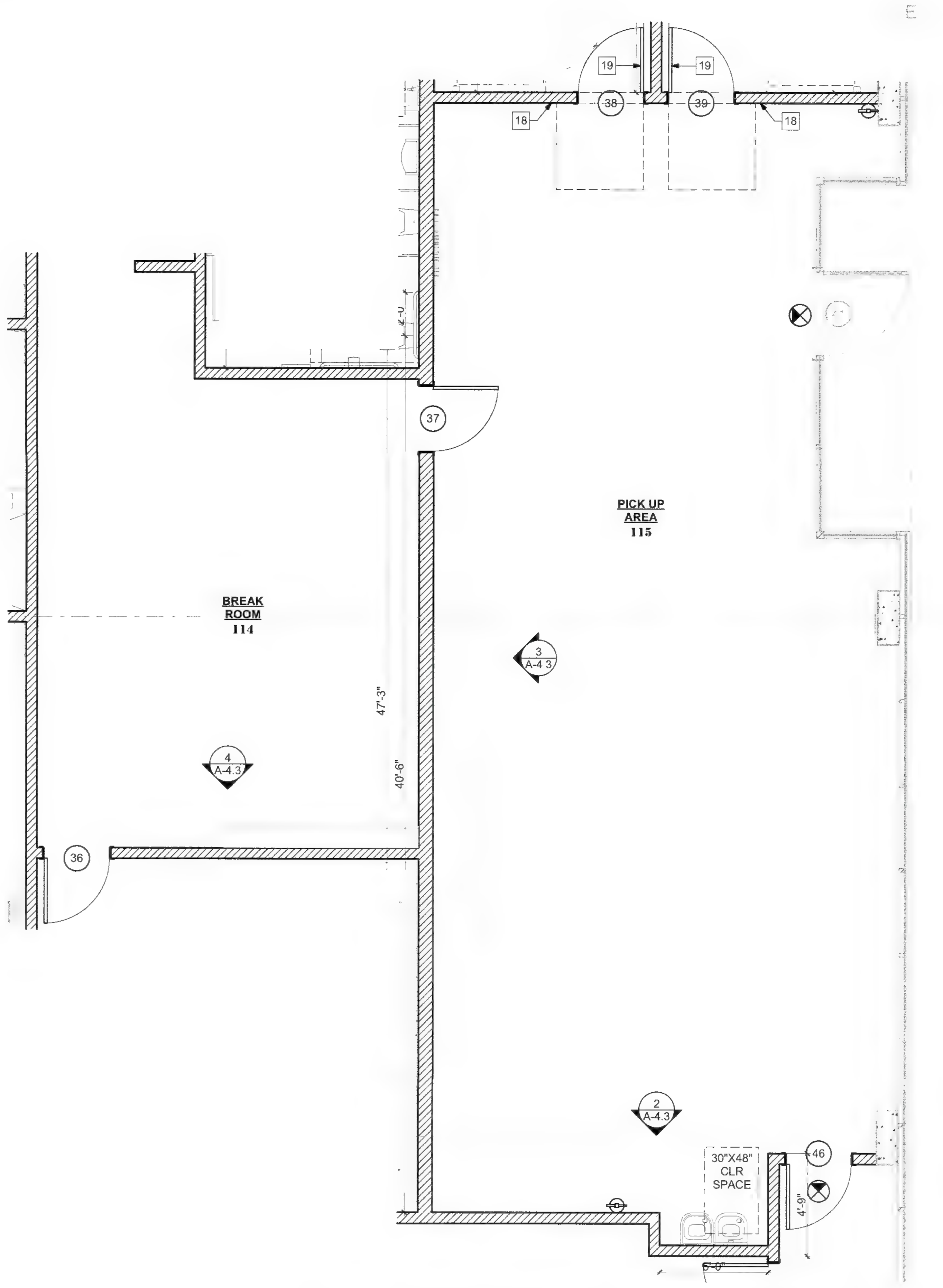

PICK UP AREA / BREAK ROOM ENLARGED PLAN (1)
SCALE: 1/4" = 1'-0"

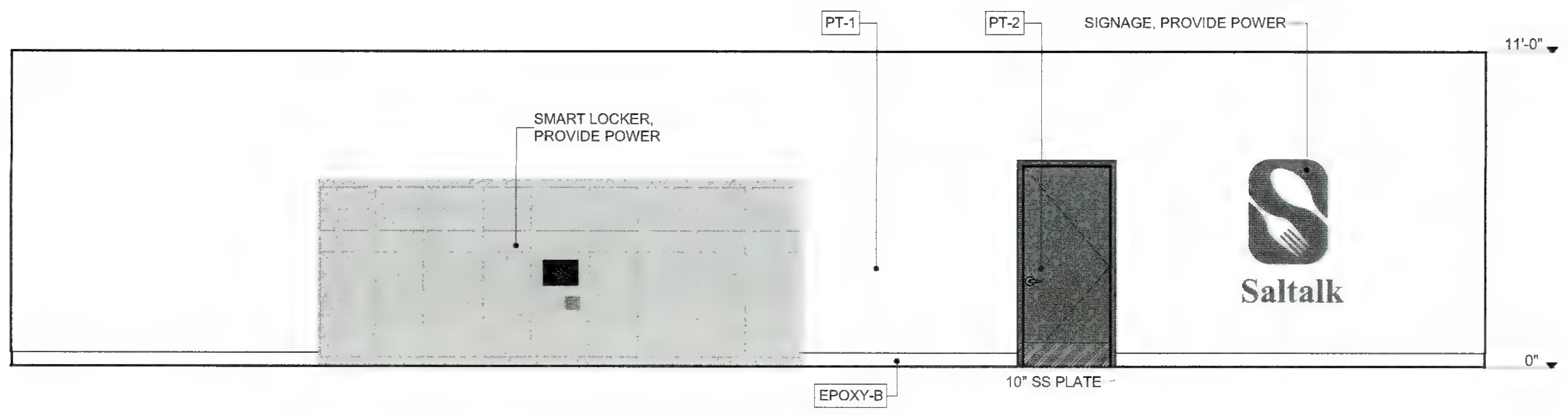

115 PICK UP AREA North (3)
SCALE: 1/4" = 1'-0"

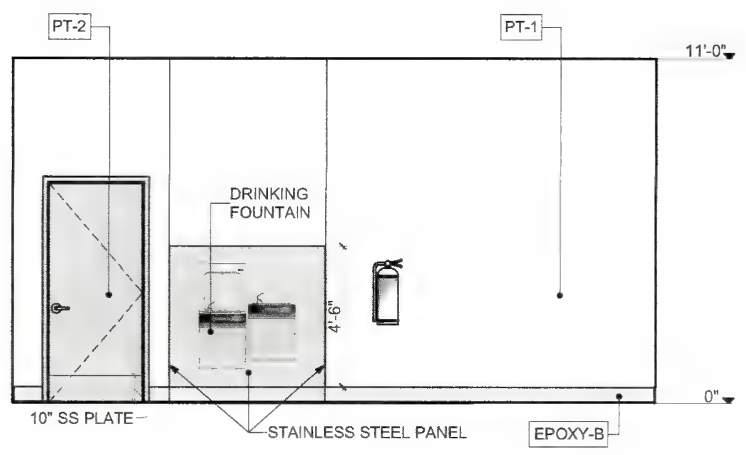

115 PICK UP AREA West (2)
SCALE: 1/4" = 1'-0"

CO-AR DESIGN, INC.
680 Brea Canyon Rd., Ste. 178
Diamond Bar, CA 91789

Office: 909-598-0186
http:\\www.coardesign.com

Dennis J. Lee, Architect
dennisl@coardesign.com

THESE DRAWINGS ARE THE PROPERTY OF THE ARCHITECT. THE DESIGNS SHOWN AND DESCRIBED HERIN INCLUDING ALL TECHNICAL DRAWINGS ARE PROPRIETARY AND CANNOT BE COPIED, DUPLICATED OR COMMERCIALLY EXPLOITED, IN WHOLE OR IN PART. THE DRAWINGS AND SPECIFICATIONS SHALL NOT BE USED BY THE OWNER ON OTHER PROJECTS, FOR ADDITIONS TO THIS PROJECT, OR FOR COMPLETION OF THIS PROJECT BY OTHERS. THE OWNER AGREES TO HOLD HARMLESS, INDEMNIFY AND DEFEND THE ARCHITECT AGAINST ALL DAMAGES, CLAIMS AND LOSSES, INCLUDING DEFENSE COSTS, ARISING OUT OF ANY REUSE OF THE PLANS AND SPECIFICATIONS WITHOUT THE WRITTEN AUTHORIZATION OF THE ARCHITECT OF RECORD

COPYRIGHT © 2022 CO-AR DESIGN, INC., ALL RIGHTS RESERVED

SEAL
LICENSED ARCHITECT
DENNIS JOON HO LEE
C-29168
4/30/2023
STATE OF CALIFORNIA

PROJECT
SALTALK FREMONT KITCHEN TENANT IMPROVEMENT

42550 ALBRAE ST.,
FREMONT, CA 94538

CLIENT
SALTALK, INC.
3334 VICTOR CT.,
SANTA CLARA, CA 95054

SUBMITTALS/ REVISIONS

4	1ST PLANNING SUBMITTAL		2/10/22
5	SD		3/7/22
6	1ST HEALTH SUBMITTAL		4/7/22
7	1ST BLDG SUBMITTAL		4/11/22
8	2ND BLDG SUBMITTAL	1	7/29/22
9	3RD USD SUBMITTAL	3	9/12/22
10	2ND HEALTH SUBMITTAL	4	xx/xx/22
11	3RD BLDG SUBMITTAL	5	xx/xx/22

PROJECT NO	202201
SCALE	AS SHOWN
DATE	10/4/2022
DRAWN BY	ED / FW
CHECKED BY	DL

SHEET TITLE
PICK UP / BREAK RM ENLARGED PLAN / INTERIOR ELEVATIONS

SHEET NO:
A-4.3 4

SUSPENDED CEILING NOTES

1. SUSPENDED CEILINGS SHALL BE DESIGNED AND INSTALLED IN ACCORDANCE WITH ASTM C635, ASTM C636, AND ASTM E580 AND THE FOLLOWING:

A. A HEAVY DUTY T-BAR GRID SYSTEM SHALL BE USED.

B. THE WIDTH OF THE PERIMETER SUPPORTING CLOSURE ANGLE SHALL BE NOT LESS THAN 2.0 IN. (50MM). IN EACH ORTHOGONAL HORIZONTAL DIRECTION, ONE END OF THE CEILING GRID SHALL BE ATTACHED TO THE CLOSURE ANGLE. THE OTHER END IN EACH HORIZONTAL DIRECTION SHALL HAVE A 0.75 IN. (19MM) CLEARANCE FROM THE WALL AND SHALL REST UPON AND BE FREE TO SLIDE ON A CLOSURE ANGLE.

C. FOR CEILING AREAS EXCEEDING 1,000 FT2 (92.9M2), HORIZONTAL RESTRAINT OF THE CEILING TO THE STRUCTURAL SYSTEM SHALL BE PROVIDED. THE TRIBUTARY ARAS OF THE HORIZONTAL RESTRAINTS SHALL BE APPROXIMATELY EQUAL. EXCEPTION: RIGID BRACES ARE PERMITTED TO BE USED INSTEAD OF DIAGONAL SPLAY WIRES. BRACES AND ATTACHMENTS TO THE STRUCTURAL SYSTEM ABOVE SHALL BE ADEQUATE TO LIMIT RELATIVE LATERAL DEFLECTIONS AT POINT OF ATTACHMENT OF CEILING GRID TO LESS THAN 0.25 IN. (6MM) FOR THE LOADS PRESCRIBED IN ASCE 7-10.

D. FOR CEILING AREAS EXCEEDING 2,500 FT2 (232 M2), A SEISMIC SEPARATION JOINT OR FULL HEIGHT PARTITION THAT BREAKS THE CEILING UP INTO AREAS NOT EXCEEDING 2,500 FT2 SHALL BE PROVIDED UNLESS STRUCTURAL ANALYSES ARE PERFORMED OF THE CEILING BRACING SYSTEM FOR THE PRESCRIBED SEISMIC FORCES THAT DEMONSTRATE CEILING SYSTEM PENETRATIONS AND CLOSURE ANGLES PROVIDE SUFFICIENT CLEARANCE TO ACCOMMODATE THE ANTICIPATED LATERAL DISPLACEMENT. EACH AREA SHALL BE PROVIDED WITH CLOSURE ANGLES IN ACCORDANCE WITH ITEM B AND HORIZONTAL RESTRAINTS OR BRACING IN ACCORDANCE WITH ITEM C.

E. EXCEPT WHERE RIGID BRACES ARE USED TO LIMIT LATERAL DEFLECTIONS, SPRINKLER HEADS AND OTHER PENETRATIONS SHALL HAVE A 2 IN. (50 MM) OVERSIZE RING, SLEEVE, OR ADAPTER THROUGH THE CEILING TILE TO ALLOW FOR FREE MOVEMENT OF AT LEAST 1 IN. (25 MM) IN ALL HORIZONTAL DIRECTIONS. ALTERNATIVELY, A SWING JOINT THAT CAN ACCOMMODATE 1 IN. (25 MM) OF CEILING MOVEMENT IN ALL HORIZONTAL DIRECTIONS IS PERMITTED TO BE PROVIDED AT THE TOP OF THE SPRINKLER HEAD EXTENSION.

F. CHANGES IN CEILING PLAN ELEVATION SHALL BE PROVIDED WITH POSITIVE BRACING.

G CABLE TRAYS AND ELECTRICAL CONDUITS SHALL BE SUPPORTED INDEPENDENTLY OF THE CEILING

H SUSPENDED CEILING SHALL BE SUBJECT TO THE SPECIAL INSPECTION REQUIREMENTS OF ASCE 7-10.

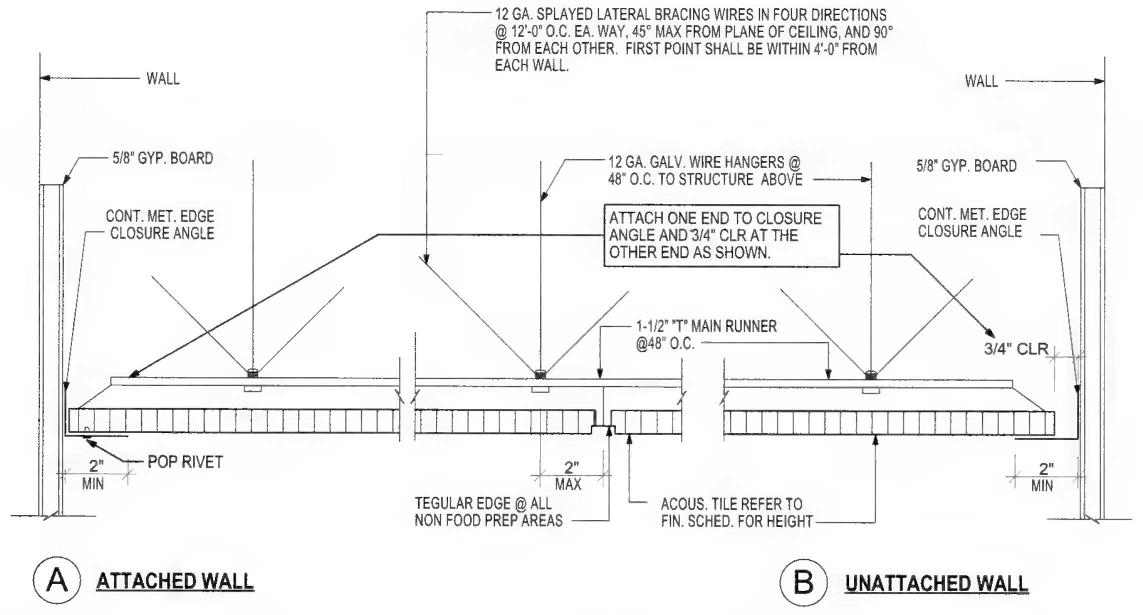

(A) ATTACHED WALL

(B) UNATTACHED WALL

NOTE:
1. PROVIDE COMPRESSION STRUTS @ 12'-0" O.C. EA. WAY, WITH FIRST POINT WITHIN 6'-0" OF EA. WALL.
2. 20 GA. MIN. FOR MAIN RUNNER, 24 GA. MIN. FOR CROSS RUNNER, TYP.

TYP. SUSPENDED CEILING DETAIL (22)

SCALE: 3" = 1'-0"

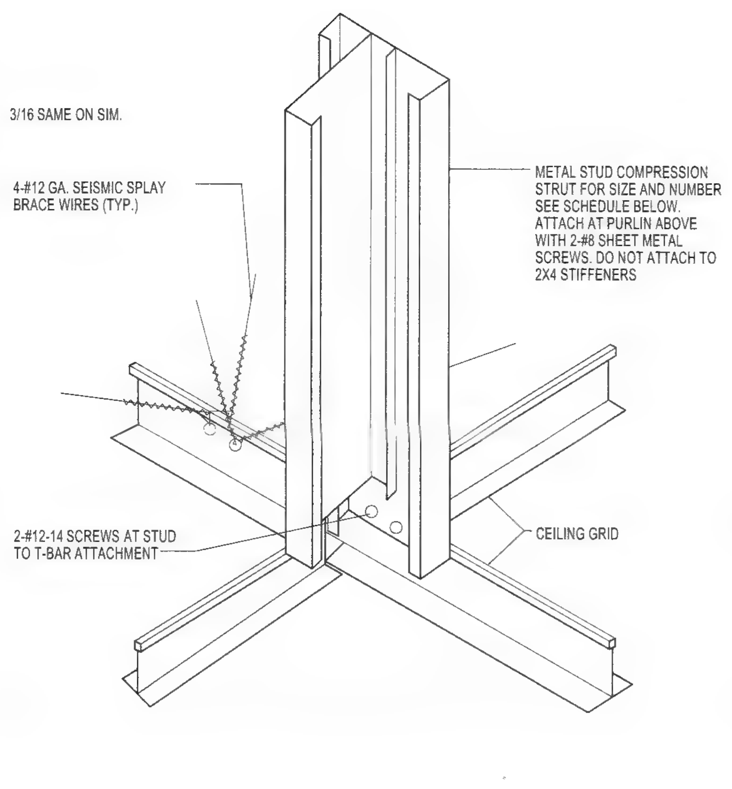

SCHEDULE		
METAL STUD SIZE AND GUAGE	MAX. HT. OF COMPRESSION STRUT	
	SINGLE STUD	DOUBLE STUD
1 5/8" X 20 GA. S.S.	7'-8"	11'-8"
2 1/2" X 20 GA. S.S.	8'-7"	16'-6"
3 1/2" X 20 GA. S.S.	9'-4"	22'-9"
3 5/8" X 20 GA. S.S.	10'-0"	23'-6"

NOTE:
SPACE SEISMIC SPLAY BRACE WIRES AND CONDUIT PIPE AT NO MORE THAN 12'-0" O.C. IN EITHER DIRECTION

NOTES:
1. FOR DOUBLE STUD ATTACH WEB TO FLANGE WITH NO. 6 SCREW AT 18" O.C.
2. A SS METAL STUD HAS A 1 1/4" WIDE FLANGE.
A WC METAL STUD HAS A 1 5/8" WIDE FLANGE.

SEISMIC SPLAY / COMPRESSION STRUT (17)

SCALE: 1' = 1'-0"

11B-703.1 General. Signs shall comply with *Section 11B*-703. Where both visual and tactile characters are required, either one sign with both visual and tactile characters, or two separate signs, one with visual, and one with tactile characters, shall be provided.

11B-703.2 Raised characters. Raised characters shall comply with *Section 11B*-703.2 and shall be duplicated in Braille complying with *Section 11B*-703.3. Raised characters shall be installed in accordance with *Section 11B*-703.4.

11B-703.2.1 Depth. Raised characters shall be 1/32 inch (0.8 mm) minimum above their background.

11B-703.2.2 Case. Characters shall be uppercase.

11B-703.2.3 Style. Characters shall be sans serif. Characters shall not be italic, oblique, script, highly decorative, or of other unusual forms.

11B-703.2.4 Character proportions. Characters shall be selected from fonts where the width of the uppercase letter "O" is *60* percent minimum and 110 percent maximum of the height of the uppercase letter "I".

11B-703.2.5 Character height. Character height measured vertically from the baseline of the character shall be 5/8 inch (*15.9* mm) minimum and 2 inches (51 mm) maximum based on the height of the uppercase letter "I".

11B-703.2.6 Stroke thickness. Stroke thickness of the uppercase letter "I" shall be 15 percent maximum of the height of the character

11B-703.2.7 Character spacing. Character spacing shall be measured between the two closest points of adjacent raised characters within a message, excluding word spaces. Where characters have rectangular cross sections, spacing between individual raised characters shall be 1/8 inch (3.2 mm) minimum and 4 times the raised character stroke width maximum. Where characters have other cross sections, spacing between individual raised characters shall be 1/16 inch (1.6 mm) minimum and 4 times the raised character stroke width maximum at the base of the cross sections, and 1/8 inch (3.2 mm) minimum and 4 times the raised character stroke width maximum at the top of the cross sections. Characters shall be separated from raised borders and decorative elements 3/8 inch (9.5 mm) minimum.

11B-703.2.8 Line spacing. Spacing between the baselines of separate lines of raised characters within a message shall be 135 percent minimum and 170 percent maximum of the raised character height.

11B-703.2.9 Format. *Text shall be in a horizontal format.*

11B-703.3 Braille. Braille shall be contracted (Grade 2) and shall comply with *Sections 11B*-703.3 and *11B*-703.4.

11B-703.3.1 Dimensions and capitalization. Braille dots shall have a domed or rounded shape and shall comply with Table *11B*-703.3.1. The indication of an uppercase letter or letters shall only be used before the first word of sentences, proper nouns and names, individual letters of the alphabet, initials, and acronyms.

11B-703.3.2 Position. Braille shall be positioned below the corresponding text *in a horizontal format, flush left or centered*. If text is multi-lined, Braille shall be placed below the entire text. Braille shall be separated 3/8 inch (9.5 mm) minimum *and 1/2 inch (12.7 mm) maximum* from any other tactile characters and 3/8 inch (9.5 mm) minimum from raised borders and decorative elements

Exception: Braille provided on elevator car controls shall be separated 3/16 inch (4.8 mm) minimum and shall be located either directly below the corresponding raised characters or symbols.

11B-703.4 Installation height and location. Signs with tactile characters shall comply with *Section 11B*-703.4.

11B-703.4.1 Height above finish floor or ground. Tactile characters on signs shall be located 48 inches (*1219* mm) minimum above the finish floor or ground surface, measured from the baseline of the lowest *Braille cells* and 60 inches (*1524* mm) maximum above the finish floor or ground surface, measured from the baseline of the highest *line of raised characters*.

Exception: Tactile characters for elevator car controls shall not be required to comply with *Section 11B*-703.4.1.

11B-703.4.2 Location. Where a tactile sign is provided at a door, the sign shall be located alongside the door at the latch side. Where a tactile sign is provided at double doors with one active leaf, the sign shall be located on the inactive leaf. Where a tactile sign is provided at double doors with two active leafs, the sign shall be located to the right of the right hand door. Where there is no wall space at the latch side of a single door or at the right side of double doors, signs shall be located on the nearest adjacent wall. Signs containing tactile characters shall be located so that a clear floor space of 18 inches (*457* mm) minimum by 18 inches (*457* mm) minimum, centered on the tactile characters, is provided beyond the arc of any door swing between the closed position and 45 degree open position. *Where permanent identification signage is provided for rooms and spaces they shall be located on the approach side of the door as one enters the room or space. Signs that identify exits shall be located on the approach side of the door as one exits the room or space.*

11B-703.5 Visual characters. Visual characters shall comply with *Section 11B*-703.5.

Exception: Where visual characters comply with *Section 11B*-703.2 and are accompanied by Braille complying with *Section 11B*-703.3, they shall not be required to comply with *Sections 11B*-703.5.2 through *11B-703.5.6, 11B-703.5.8 and 11B-703.5.9.*

11B-703.5.1 Finish and contrast. Characters and their background shall have a non-glare finish. Characters shall contrast with their background with either light characters on a dark background or dark characters on a light background.

11B-703.5.2 Case. Characters shall be uppercase or lowercase or a combination of both.

11B-703.5.3 Style. Characters shall be conventional in form. Characters shall not be italic, oblique, script, highly decorative, or of other unusual forms.

11B-703.5.4 Character proportions. Characters shall be selected from fonts where the width of the uppercase letter "O" is *60* percent minimum and 110 percent maximum of the height of the uppercase letter "I".

11B-703.5.5 Character height. Minimum character height shall comply with Table *11B*-703.5.5. Viewing distance shall be measured as the horizontal distance between the character and an obstruction preventing further approach towards the sign. Character height shall be based on the uppercase letter "I".

Exception: *Where provided, floor plans providing emergency procedures information in accordance with Title 19 shall not be required to comply with Section 11B-703.5.5.*

11B-703.5.6 Height from finish floor or ground. Visual characters shall be 40 inches (*1016* mm) minimum above the finish floor or ground.

Exceptions: *1.* Visual characters indicating elevator car controls shall not be required to comply with *Section 11B*-703.5.6.

2. Floor-level exit signs complying with Chapter 10, Section 1011.7 shall not be required to comply with Section 11B-703.5.6.

3. Where provided, floor plans providing emergency procedures information in accordance with Title 19 shall not be required to comply with Section 11B-703.5.6.

11B-703.5.7 Stroke thickness. Stroke thickness of the uppercase letter "I" shall be 10 percent minimum and *20* percent maximum of the height of the character.

11B-703.5.8 Character spacing. Character spacing shall be measured between the two closest points of adjacent characters, excluding word spaces. Spacing between individual characters shall be 10 percent minimum and 35 percent maximum of character height.

11B-703.5.9 Line spacing. Spacing between the baselines of separate lines of characters within a message shall be 135 percent minimum and 170 percent maximum of the character height.

11B-703.5.10 Format. *Text shall be in a horizontal format.*

11B-703.6 Pictograms. Pictograms shall comply with *Section 11B*-703.6.

11B-703.6.1 Pictogram field. Pictograms shall have a field height of 6 inches (*152* mm) minimum. Characters and Braille shall not be located in the pictogram field

11B-703.6.2 Finish and contrast. Pictograms and their field shall have a non-glare finish. Pictograms shall contrast with their field with either a light pictogram on a dark field or a dark pictogram on a light field.

11B-703.6.3 Text descriptors. Pictograms shall have text descriptors located directly below the pictogram field. Text descriptors shall comply with *Sections 11B*-703.2, *11B*-703.3 and *11B*-703.4

11B-703.7 Symbols of accessibility. Symbols of accessibility shall comply with *Section 11B*-703.7.

11B-703.7.1 Finish and contrast. Symbols of accessibility and their background shall have a non-glare finish. Symbols of accessibility shall contrast with their background with either a light symbol on a dark background or a dark symbol on a light background.

11B-703.7.2 Symbols

11B-703.7.2.1 International Symbol of Accessibility. The International Symbol of Accessibility shall comply with Figure *11B*-703.7.2.1. *The symbol shall consist of a white figure on a blue background. The blue shall be Color No. 15090 in Federal Standard 595B.*

Exception: *The appropriate enforcement agency may approve other colors to complement décor or unique design. The symbol contrast shall be light on dark or dark on light*

11B-703.7.2.2 International Symbol of TTY. The International Symbol of TTY shall comply with Figure *11B*-703.7.2.2.

11B-703.7.2.3 Volume control telephones. Telephones with a volume control shall be identified by a pictogram of a telephone handset with radiating sound waves on a square field such as shown in Figure *11B*-703.7.2.3.

11B-703.7.2.4 Assistive listening systems. Assistive listening systems shall be identified by the International Symbol of Access for Hearing Loss complying with Figure *11B*-703.7.2.4

11B-703.7.2.5 Cleaner Air Symbol. *Rooms, facilities and paths of travel that are accessible to and usable by people who are adversely impacted by airborne chemicals or particulate(s) and/or the use of electrical fixtures and/or devices shall be identified by the Cleaner Air Symbol complying with Figure 11B-703.7.2.5. This symbol is to be used strictly for publicly funded facilities or any facilities leased or rented by State of California, not concessionaires. The symbol, which shall include the text "Cleaner Air" as shown, shall be displayed either as a negative or positive image within a square that is a minimum of 6 inches (152 mm) on each side. The symbol may be shown in black and white or in color. When color is used, it shall be Federal Blue (Color No. 15090 Federal Standard 595B) on white, or white on Federal Blue. There shall be at least a 70-percent color contrast between the background of the sign from the surface that it is mounted on.*

11B-703.7.2.6 Toilet and bathing facilities geometric symbols. *Doorways leading to toilet rooms and bathing rooms shall be identified by a geometric symbol complying with Section 11B-703.7.2.6. The symbol shall be mounted at 58 inches (1473 mm) minimum and 60 inches (1524 mm) maximum above the finish floor or ground surface measured from the centerline of the symbol. Where a door is provided the symbol shall be mounted within 1 inch (25 mm) of the vertical centerline of the door.*

Exception: *Geometric symbols shall not be required at inmate toilet rooms and bathing rooms in detention and correctional facilities where only one gender is housed.*

11B-703.7.2.6.1 Men's toilet and bathing facilities. *Men's toilet and bathing facilities shall be identified by an equilateral triangle, 1/4 inch (6.4 mm) thick with edges 12 inches (305 mm) long and a vertex pointing upward. The triangle symbol shall contrast with the door, either light on a dark background or dark on a light background.*

Exception: *Within secure perimeter of detention and correctional facilities, geometric symbols shall not be required to be 1/4 inch (6.4 mm) thick.*

11B-703.7.2.6.2 Women's toilet and bathing facilities. *Women's toilet and bathing facilities shall be identified by a circle, 1/4 inch (6.4 mm) thick and 12 inches (305 mm) in diameter. The circle symbol shall contrast with the door, either light on a dark background or dark on a light background.*

Exception: *Within secure perimeter of detention and correctional facilities, geometric symbols shall not be required to be 1/4 inch (6.4 mm) thick.*

11B-703.7.2.6.3 Unisex toilet and bathing facilities. *Unisex toilet and bathing facilities shall be identified by a circle, 1/4 inch (6.4 mm) thick and 12 inches (305 mm) in diameter with a ¼ inch (6.4 mm) thick triangle with a vertex pointing upward superimposed on the circle and within the 12-inch (305 mm) diameter. The triangle symbol shall contrast with the circle symbol, either light on a dark background or dark on a light background. The circle symbol shall contrast with the door, either light on a dark background or dark on a light background.*

Exception: *Within secure perimeter of detention and correctional facilities, geometric symbols shall not be required to be 1/4 inch (6.4 mm) thick.*

11B-703.7.2.6.4 Edges and corners. *Edges of signs shall be rounded, chamfered or eased. Corners of signs shall have a minimum radius of 1/8 inch (3.2 mm).*

11B-703.7.2.7 Pedestrian traffic-control buttons. *Pole-supported pedestrian traffic-control buttons shall be identified with color coding consisting of a textured horizontal yellow band 2 inches (51 mm) in width encircling the pole, and a 1-inch-wide (25 mm) dark border band above and below this yellow band. Color coding shall be placed immediately above the control button. Control buttons shall be located no higher than 48 inches (1219 mm) above the ground surface adjacent to the pole.*

WHEN NEW OR ADDITIONAL SIGNS AND/OR IDENTIFICATION DEVICES ARE PROVIDED, OR WHEN EXISTING SIGNS AND/OR IDENTIFICATION DEVICES ARE REPLACED OR ALTERED, THE NEW OR ALTERED SIGNS AND/OR IDENTIFICATION DEVICES SHALL COMPLY WITH THE FOLLOWING:

- IDENTIFICATION SIGNS: (PERMANENT ROOMS AND SPACES OF A BUILDING OR SITE)
  CBC 11B-703.1, 11B-703.2, 11B-703.3, 11B-703.5
  WHEN PICTOGRAMS ARE PROVIDED, PICTOGRAMS SHALL COMPLY WITH **CBC 11B-703.6**, AND SHALL HAVE TEXT DESCRIPTORS COMPLYING WITH **11B-703.2** AND **11B-703.5**
- DIRECTIONAL AND INFORMATIONAL SIGNS:(SIGNS THAT DIRECT TO OR GIVE INFO ABOUT ROOMS OR SPACES)
  CBC 11B-703.5
- TACTILE EXIT SIGNS
  CBC 11B-703.1, 11B-703.2, 11B-703.3, 11B-703.5

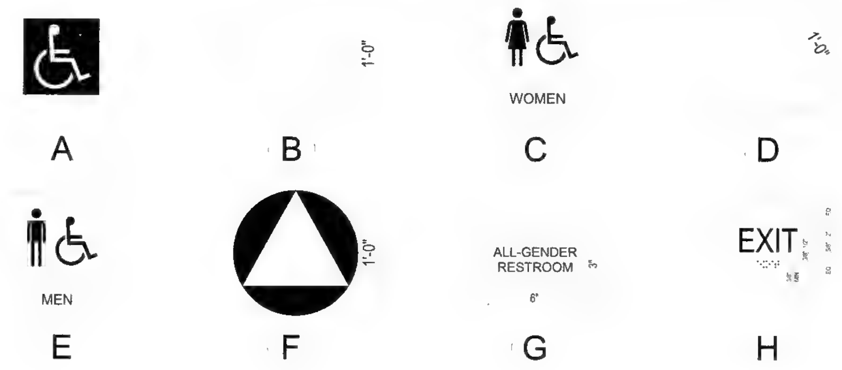

SIGNS / PICTOGRAMS (2)

SCALE: 1' = 1'-0"

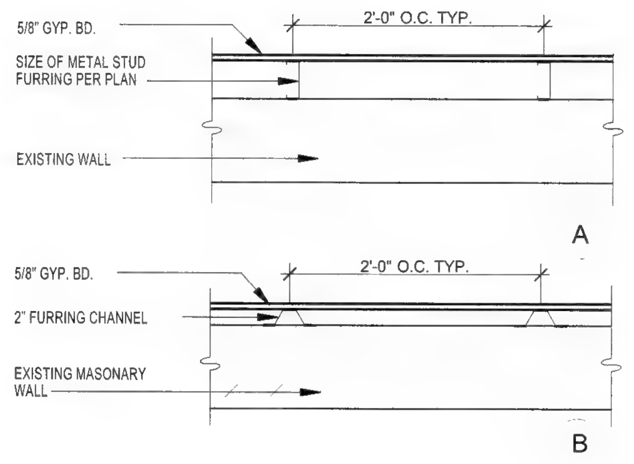

FURR WALL DETAIL @ (E) WALL (28)

SCALE: 1" = 1'-0"

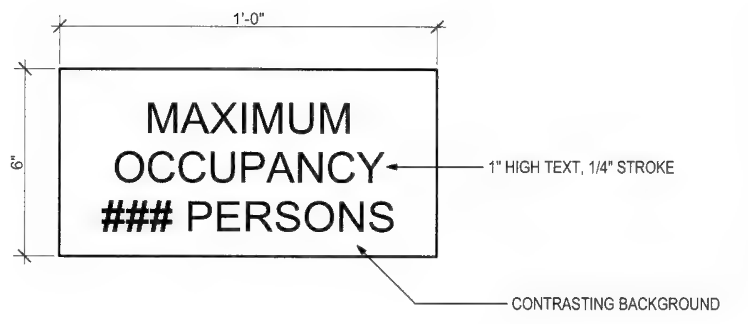

NOTE: REFER TO PLANS FOR SIGN LOCATIONS AND OCCUPANT LOAD INFO.

ROOM CAPACITY SIGN (23)

SCALE: 3" = 1'-0"

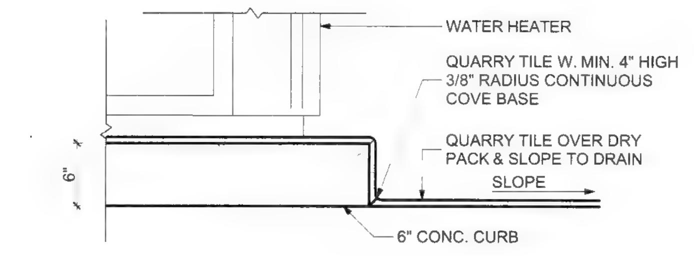

WATER HEATER CONC. CURB (18)

SCALE: 1" = 1'-0"

NOTE: GRAB BAR AND ITS INSTALLATION SHALL RESIST A 250# POINT LOAD

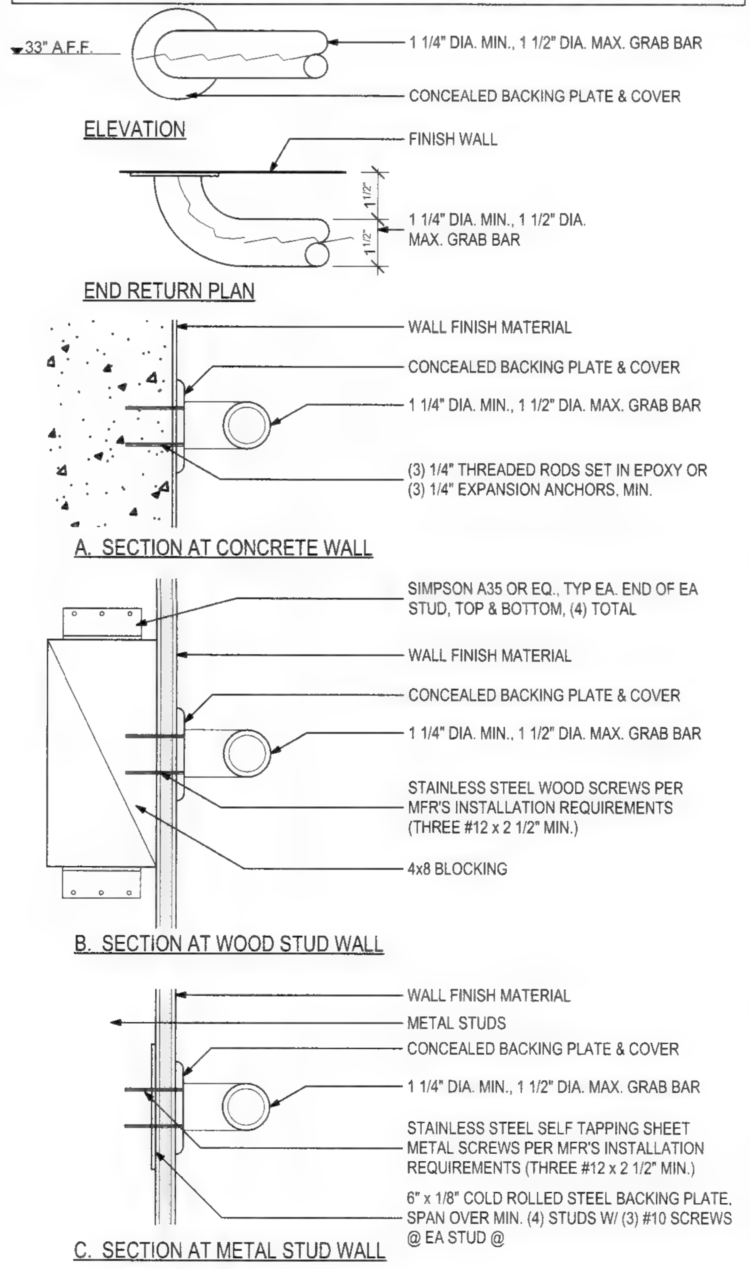

NOTES:

CONCEALED BACKING AS INDICATED BY THE DASHED BOX AREAS AROUND WALL SHELVING, SINK BACKS, ETC. SHALL CONSIST OF THE FOLLOWING:

- BACKING @ ALL RATED WALLS AND WALL UNDER EXHAUST HOOD SHALL CONSIST OF 6" 20 GA. METAL STRAPS INSTALLED PRIOR TO INSTALLATION OF GYP. BD @ ALL AREAS REQUIRED FOR FASTENING EQUIPMENT SECURELY TO STUD WALL
- BACKING @ ALL OTHER WALLS SHALL CONSIST OF 5/8" PLYWOOD SHEATHING IN PLACE OF GYP. BD. WITHIN DASHED BOXED AREAS. FINISH OVER SPECIFIED WALL PANEL FINISH PER ELEVATIONS

GRAB BAR (15)

SCALE: 3" = 1'-0"

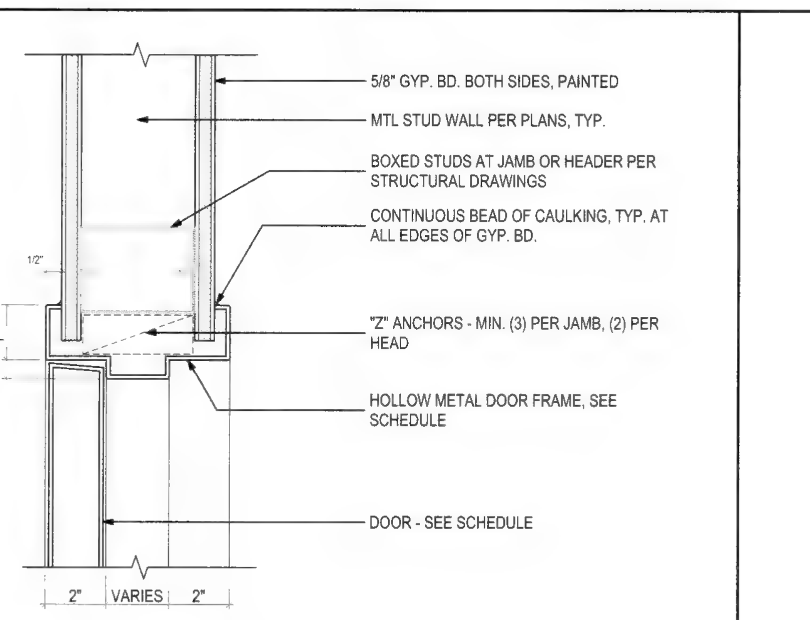

H.M. DOOR HEAD / JAMB DETAIL (8)

SCALE: 3" = 1'-0"

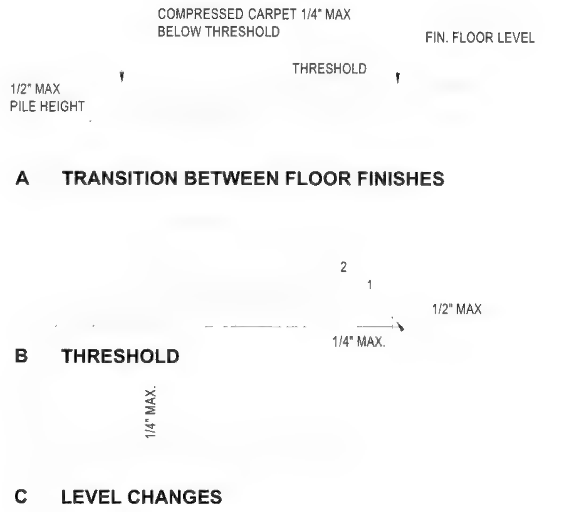

THRESHOLDS / LEVEL CHANGES (3)

SCALE: 1' = 1'-0"

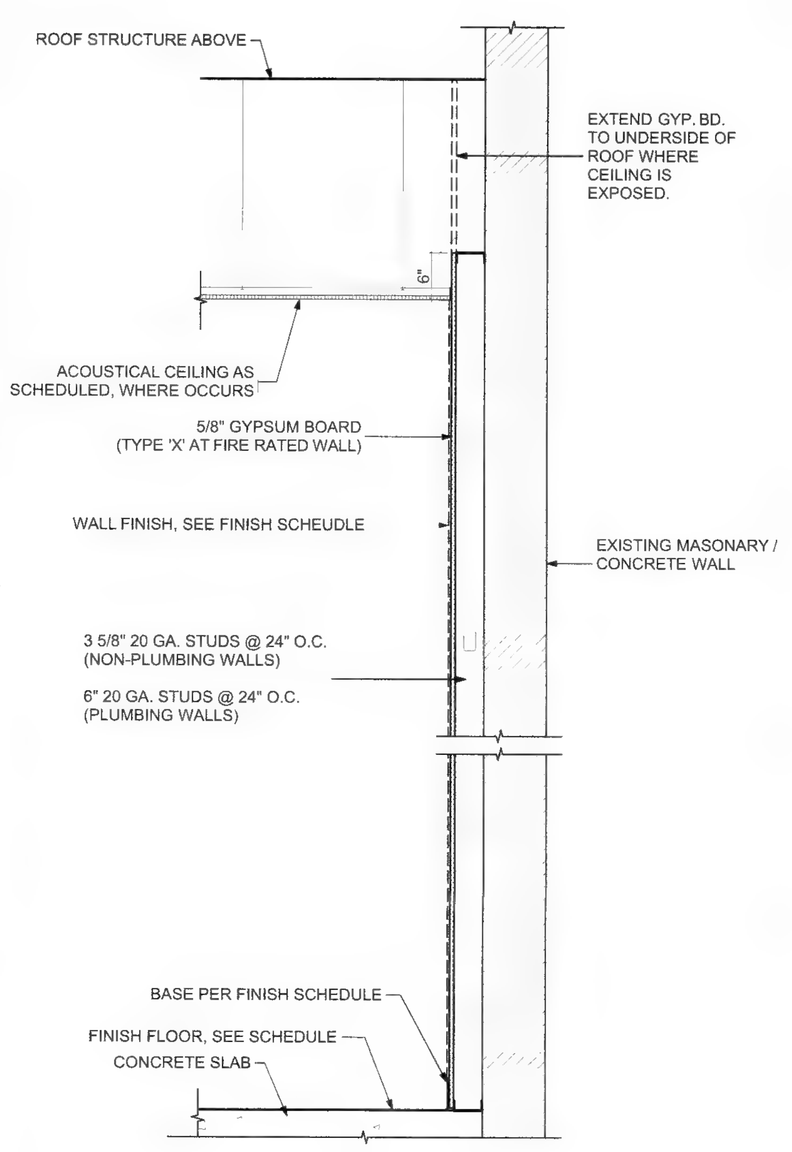

TYP. FURRED WALL (30)

SCALE: 3/4" = 1'-0"

NOTES:
1. LOCATE SWITCHPLATES, ELEC. & TEL. WALL OUTLETS AT NEAREST STUD FROM SCALED LOCATION ON PLAN, UNLESS SPECIFICALLY DIMENSIONED ON PLAN, ELEVATION, OR LOCATED AS PER DIAGRAM ABOVE.
2. IN SITUATIONS WHERE FIRE ALARM STROBES AND FIRE EXTINGUISHER CABINETS OCCUR TOGETHER IN PUBLIC AREAS, CENTER FIRE ALARM STROBES DIRECTLY ABOVE FIRE EXTINGUISHER CABINETS. THIS IS NOT REQUIRED IN EXIT PASSAGEWAYS AND CORRIDORS.

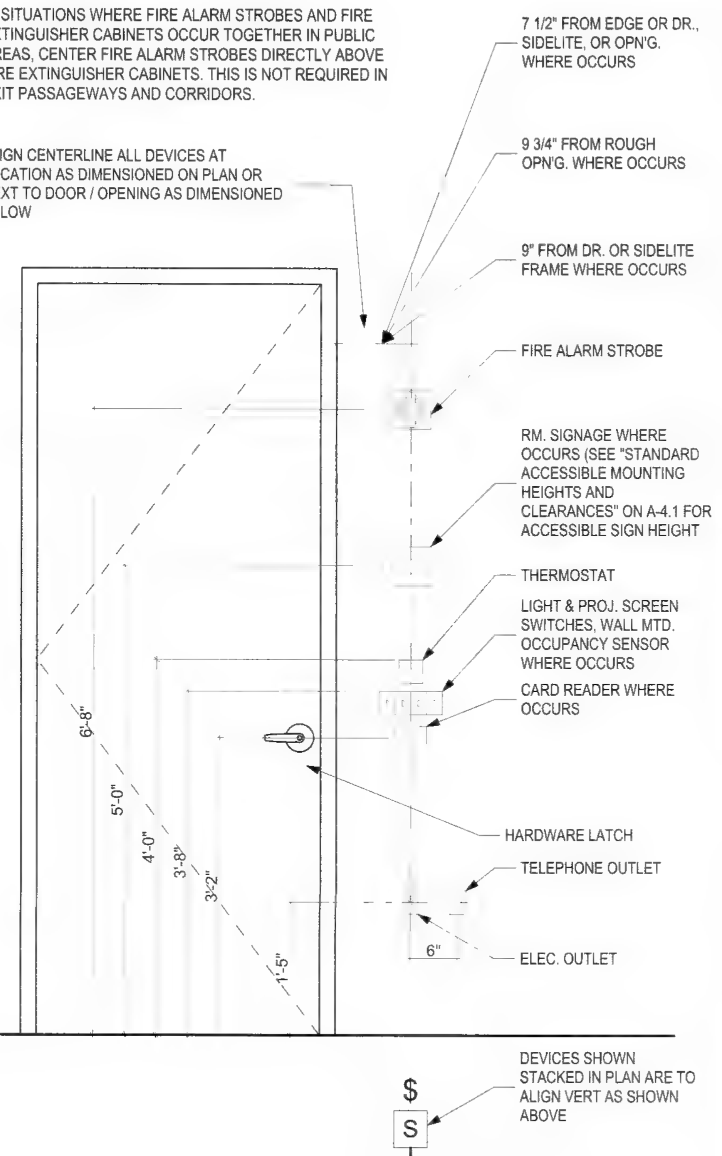

TYPICAL SWITCH AND OUTLET HEIGHTS (25)

SCALE: 3/4" = 1'-0"

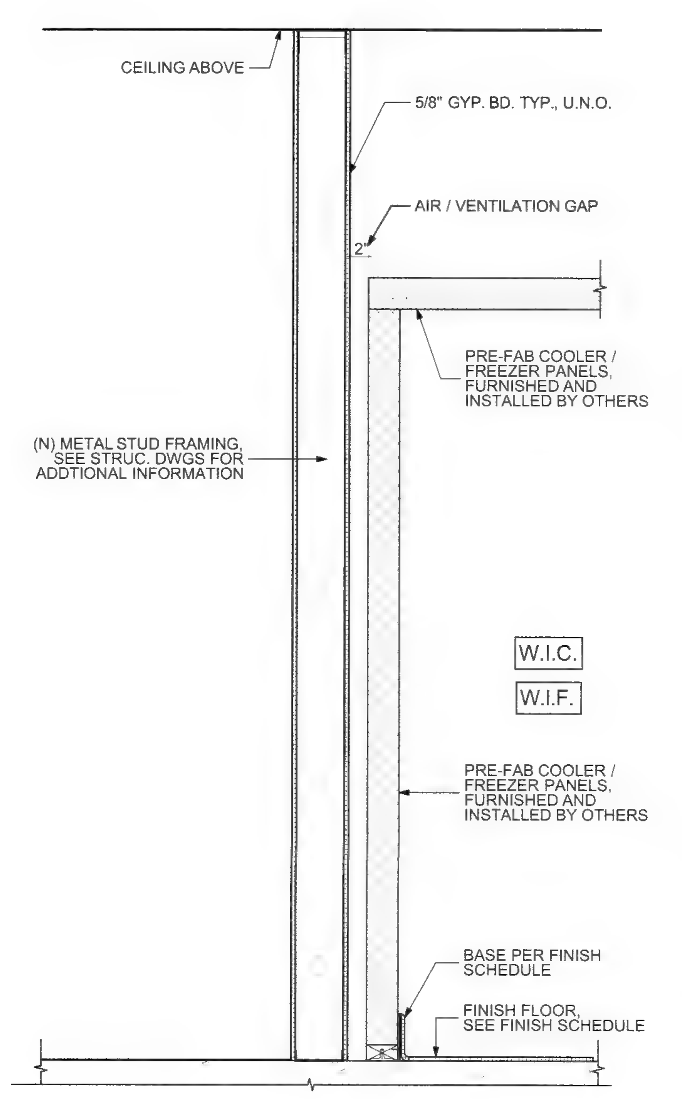

TYP. FULL HT WALL @ KITCHEN W.I.C (20)

SCALE: 3/4" = 1'-0"

Alameda County
Dept. of Environmental Health
Approved By: T. Tran

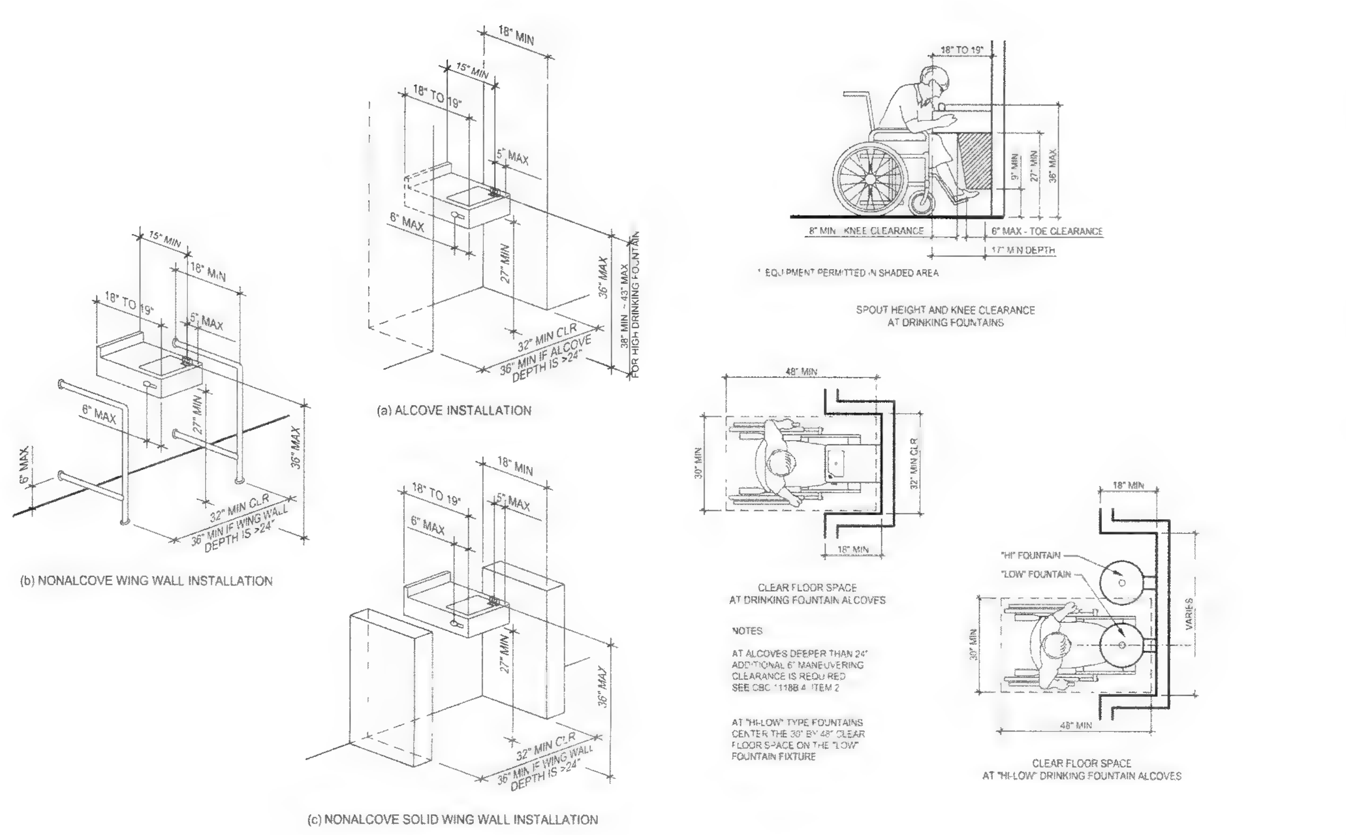

DRINKING FOUNTAIN (5)

SCALE: 1' = 1'-0"

CO-AR DESIGN, INC.
680 Brea Canyon Rd., Ste. 178
Diamond Bar, CA 91789

Office: 909-598-0186
http:\\www.coardesign.com

Dennis J. Lee, Architect
dennisl@coardesign.com

THESE DRAWINGS ARE THE PROPERTY OF THE ARCHITECT. THE DESIGNS SHOWN AND DESCRIBED HEREIN INCLUDING ALL TECHNICAL DRAWINGS ARE PROPRIETARY AND CANNOT BE COPIED, DUPLICATED OR COMMERCIALLY EXPLOITED, IN WHOLE OR IN PART. THE DRAWINGS AND SPECIFICATIONS SHALL NOT BE USED BY THE OWNER ON OTHER PROJECTS, FOR ADDITIONS TO THIS PROJECT, OR FOR COMPLETION OF THIS PROJECT BY OTHERS. THE OWNER AGREES TO HOLD HARMLESS, INDEMNIFY AND DEFEND THE ARCHITECT AGAINST ALL DAMAGES, CLAIMS AND LOSSES, INCLUDING DEFENSE COSTS ARISING OUT OF ANY REUSE OF THE PLANS AND SPECIFICATIONS WITHOUT THE WRITTEN AUTHORIZATION OF THE ARCHITECT OF RECORD

COPYRIGHT © 2022 CO-AR DESIGN, INC
ALL RIGHTS RESERVED

SEAL

LICENSED ARCHITECT
DENNIS JOON HO LEE
C-29168
4/30/2023
RENEWAL DATE
STATE OF CALIFORNIA

NOTES

PROJECT

SALTALK FREMONT KITCHEN TENANT IMPROVEMENT

42550 ALBRAE ST.,
FREMONT, CA 94538

SALTALK, INC.
3334 VICTOR CT.,
SANTA CLARA, CA 95054

4	1ST PLANNING SUBMITTAL		2/10/22
5	SD		3/7/22
6	1ST HEALTH SUBMITTAL		4/7/22
7	1ST BLDG SUBMITTAL		4/11/22
8	2ND BLDG SUBMITTAL	1	7/29/22
9	3RD USD SUBMITTAL	2	9/12/22
10	2ND HEALTH SUBMITTAL	3	xx/xx/22
11	3RD BLDG SUBMITTAL	4	xx/xx/22

PROJECT NO	202201
SCALE	AS SHOWN
DATE	10/4/2022
DRAWN BY	ED / FW
CHECKED BY	DL

SHEET TITLE

ARCHITECTURAL DETAILS

A-5.1

CALIFORNIA EXPANDED METAL PRODUCTS CO — FAS Track DL2

A.1. **Fill, Void or Cavity Material* —** (Not Shown) as an alternate 3A a min. 25 ga composite steel angle with one 5/8 in. (16 mm) leg and one 2-1/2 in (64 mm) leg with a 5/8 in. (16 mm) strip of intumescent strip affixed along the inside 2-1/2 in (64 mm) leg. Steel angle is friction fit between the top web of the ceiling runner Item 2A and the fluted steel deck.
CALIFORNIA EXPANDED METAL PRODUCTS CO — DDA (Deflection Drift Angle)

B. **Forming Material* —** Min 4 in. (102 mm) thick min 4 pcf (64 kg/m^3) mineral wool batt insulation cut to the width of the ceiling runner and compressed 33 percent in thickness, installed into flutes above ceiling runner. **In joints with a 3 hr Assembly rating, the mineral wool batt insulation shall be cut to a width not less than the full wall thickness such that the entire fluted area above the thickness of the wall is filled with mineral wool.** When gaps are present above the ceiling runner at steel deck seams or embossments in the steel deck valleys, a sliver of mineral wool batt insulation shall be used to seal each gap above the ceiling runner on both sides of wall to attain L Ratings.
INDUSTRIAL INSULATION GROUP L L C — Minwool-1200 Safing

JOHNS MANVILLE — Safing

ROCK WOOL MANUFACTURING CO — Delta Safing Board

ROCKWOOL MALAYSIA SDN BHD – SAFE

ROCKWOOL — SAFE

THERMAFIBER INC — SAF

B1. **Forming Material*-Plugs —** (Not Shown) As an alternate to the forming material (Item 3B), mineral wool plugs preformed to the shape of the fluted floor units or roof deck, may be used within the flutes. Plugs shall be friction fitted to completely fill the flutes.
ROCK WOOL MANUFACTURING CO — Delta Deck Plugs

C. **Forming Material* — Required for joints with an Assembly Rating of 3 hr.** Min 2 in. (51 mm) thick min 4 pcf (64 kg/m^3) mineral wool batt insulation cut to a width 25 percent greater than width of ceiling runner and friction-fitted (33 percent compression) into ceiling runner between legs of track.
INDUSTRIAL INSULATION GROUP L L C — Minwool-1200 Safing

JOHNS MANVILLE — Safing

ROCK WOOL MANUFACTURING CO — Delta Safing Board

ROCKWOOL MALAYSIA SDN BHD - SAFE

ROCKWOOL — SAFE

THERMAFIBER INC — SAF

D. **Fill, Void or Cavity Material* — Sealant —** (Not Shown) - As an alternate to the slivers of mineral wool batt insulation in Item 3B, a dab of sealant may be used to seal each gap above the ceiling runner on both sides of wall to attain L Ratings.
UNITED STATES GYPSUM CO — Type AS

E. **Fill, Void or Cavity Material* —** (Not Shown) when item 3A.1 is utilized a min 1/16 in. (1.6 mm) dry thickness (min 1/8 in. or 3.2 mm wet thickness) of fill material sprayed or brushed on one side of the joint system, completely covering item 3B mineral wool forming material of the joint system and overlapping a min of 1/2 in. (13 mm) onto the steel deck and item 3A.1 DDA on one side of the wall.
RECTORSEAL — Metacaulk 1200, Biostop 750, FlameSafe FS3000, Metacaulk 1500, or Biostop 800 Spray.

System No. HW-D-0577

October 20, 2015

ANSI/UL2079	CAN/ULC S115
Assembly Ratings - 1, 2 and 3 Hr (See Items 2 and 3)	F Ratings - 1, 2 and 3 Hr (See Items 2 and 3)
Nominal Joint Width - 3/4 or 1 In.(See Item 3)	FT Ratings - 1, 2 and 3 Hr (See Items 2 and 3)
Class II or III Movement Capabilities - 100% Compression or Extension	FH Ratings - 1, 2 and 3 Hr (See Items 2 and 3)
L Rating At Ambient - Less Than 1 CFM/sq ft	FTH Ratings - 1, 2 and 3 Hr (See Items 2 and 3)
L Rating At 400 F - Less Than 1 CFM/sq ft	Nominal Joint Width - 3/4 or 1 In.(See Item 3)
	Class II or III Movement Capabilities - 100% Compression or Extension
	L Rating At Ambient - Less Than 1 CFM/sq ft
	L Rating At 400 F - Less Than 1 CFM/sq ft

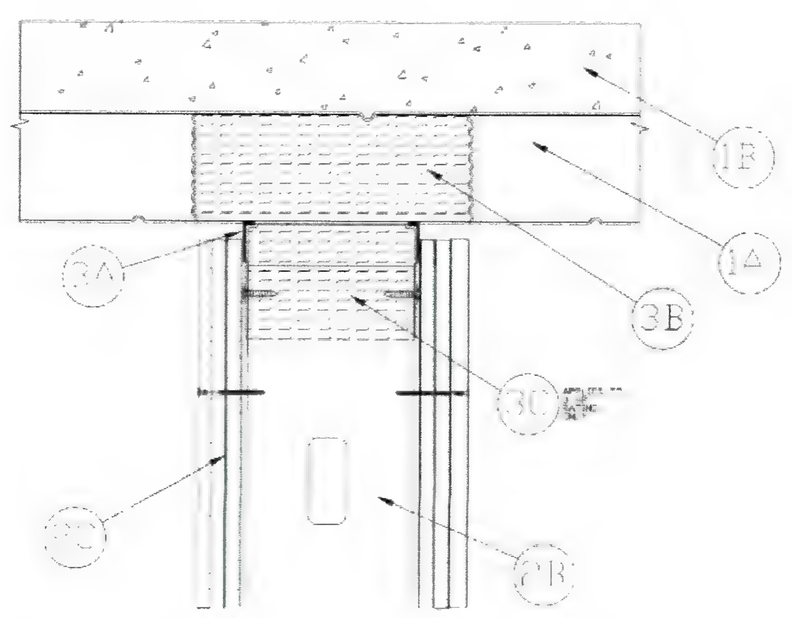

1. **Floor Assembly —** The fire-rated fluted steel deck/concrete floor assembly shall be constructed of the materials and in the manner described in the individual D700 or D900 Series Floor-Ceiling Design in the UL Fire Resistance Directory and shall include the following construction features:
   A. **Steel Floor And Form Units* —** Max 3 in. (76 mm) deep galv steel fluted floor units.

   B. **Concrete —** Min 2-1/2 in. (64 mm) thick reinforced concrete, as measured from the top plane of the floor units.

   C. **Spray-Applied Fire Resistive Material* —** (Not shown) — As specified in the D700 or D900 Series Floor-Ceiling Design. No Spray-applied material shall be applied to the flanges of the ceiling runner.
   ISOLATEK INTERNATIONAL — Type 300

   GCP APPLIED TECHNOLOGIES INC — Type MK-6/HY

1A. **Roof Assembly —** (Not Shown) — As an alternate to the floor assembly, a fire rated fluted steel deck roof assembly may be used. The roof shall by constructed of the materials and in the manner described in the individual P700 or P900-Series Roof-Ceiling designs in the UL Fire Resistance Directory. The hourly rating of the roof assembly shall be equal to or greater than the hourly rating of the wall assembly. The roof assembly shall include the following construction features:
   A. **Steel Roof Deck —** Max 3 in. (76 mm) deep galv steel fluted roof deck.

   B. **Roof Insulation —** Roof insulation to consist of min 2-1/4 in. (57 mm) thick poured insulating concrete, as measured from the top plane of the roof deck.

   C. **Spray-Applied Fire Resistive Material* —** As specified in the P700 or P900 Series Floor-Ceiling Design. No Spray-applied material shall be applied to the flanges of the ceiling runner.
   ISOLATEK INTERNATIONAL — Type 300

   GCP APPLIED TECHNOLOGIES INC — Type MK-6/HY

2. **Wall Assembly —** The 1, 2 or 3 hr fire rated gypsum board/stud wall assembly shall be constructed of the materials and in the manner described in the individual U400, V400 or W400 Series Wall and Partition Design in the UL Fire Resistance Directory and shall include the following construction features:
   A. **Steel Floor and Ceiling Runners —** Floor runners of wall assembly shall consist of min No. 25 ga galv steel channels sized to accommodate steel studs (Item 2D). Floor runner to be provided with min 1-1/4 in. (32mm) flanges. Legs are to be min 1/4 in. (6 mm) longer than the maximum joint width. The ceiling runners are provided with a fill, void or cavity material and are described in Item 3B. Ceiling runner installed perpendicular to steel deck direction and attached to steel deck after spray-applied material (Item 1C) if used, with steel fasteners or welds spaced max 24 in. (610 mm) OC.

   A.1. **Light Gauge Framing* — Slotted Ceiling Track —** (Not Shown) - As an alternate to the Item 2A, a ceiling track consisting of galv steel channel with slotted flanges may be used when Item 3A.1 fill material is utilized. Slotted ceiling track sized to accommodate steel studs (Item 2B). Legs are to be min 1/4 in. (6 mm) longer than the maximum joint width. Attached to steel deck with steel fasteners or welds spaced max 24 in. (610 mm) OC.
   BRADY CONSTRUCTION INNOVATIONS INC, DBA SLIPTRACK SYSTEMS — SLP-TRK

   CALIFORNIA EXPANDED METAL PRODUCTS CO - CST, CST 325

   MARINO/WARE, DIV OF WARE INDUSTRIES INC — Type SLT

   B. **Studs —** Steel studs to be min 3-5/8 in. (92 mm) wide. Studs cut 1-1/4 to 1-1/2 in. (32 to 38 mm) less in length than assembly height with bottom nesting in and secured to floor runner. Steel studs nested in non-slotted ceiling runner without attachment.

   B1. **Framing Members - Steel Studs* —** In lieu of Item B - Proprietary channel shaped studs, 3-5/8 in. (92 mm) wide spaced a max of 24 in. (610 mm) OC. Studs to be cut 1-1/4 to 1-1/2 in. (32 to 38 mm) less than the assembly height with bottom nesting in and secured to floor runner. Steel studs nested in non-slotted ceiling runner without attachment.
   CALIFORNIA EXPANDED METAL PRODUCTS CO — ViperStud™

   MARINO/WARE, DIV OF WARE INDUSTRIES INC — ViperStud™

   C. **Gypsum Board* —** Gypsum board sheets installed to a min total 5/8 in. (16 mm), 1-1/4 (32 mm) or 1-7/8 in. (48 mm) thickness on each side of wall for 1, 2 and 3 hr fire rated assemblies, respectively. Wall to be constructed as specified in the individual U400, V400 or W400 Series Design in the UL Fire Resistance Directory except that a max 1 in. (25 mm) gap shall be maintained between the top of the gypsum board and the bottom of the floor assembly. The screws attaching the gypsum board to the studs along the top of the wall shall be located 4 to 5 in. (102 to 127 mm) down from deck at time of installation. No gypsum board attachment screws shall be driven into the ceiling runner.
   The hourly fire rating of the joint system is equal to the hourly fire rating of the wall.

3. **Joint System —** Max separation between bottom of floor and top of gypsum board (at time of installation) is 1 in. (25 mm). The joint system is designed to accommodate a max 100 percent compression or extension from its installed width. When item 2A.1 is used max nominal width is 3/4 in. (19 mm.
   A. **Fill, Void or Cavity Material* —** Min 20 ga steel channel track, 3-1/4 in. (83 mm) deep, having an intumescent strip affixed to the top of each flange and sized to accommodate steel studs. Gypsum board to overlap a min of 1in. (25 mm) over the intumescent strip. Track attached to steel deck with steel fasteners or welds spaced max 24 in. (610 mm) OC.

5

UL HW-D-0577 (15)
SCALE: 1" = 1'-0"

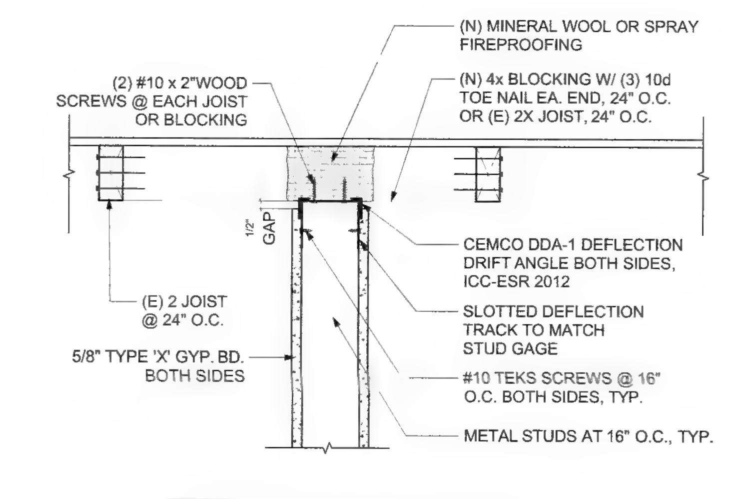

SEE 15/A-5.2 FOR MORE INFORMATION

HEAD OF WALL AT 1 HR WALL (6)
SCALE: 1 1/2" = 1'-0"

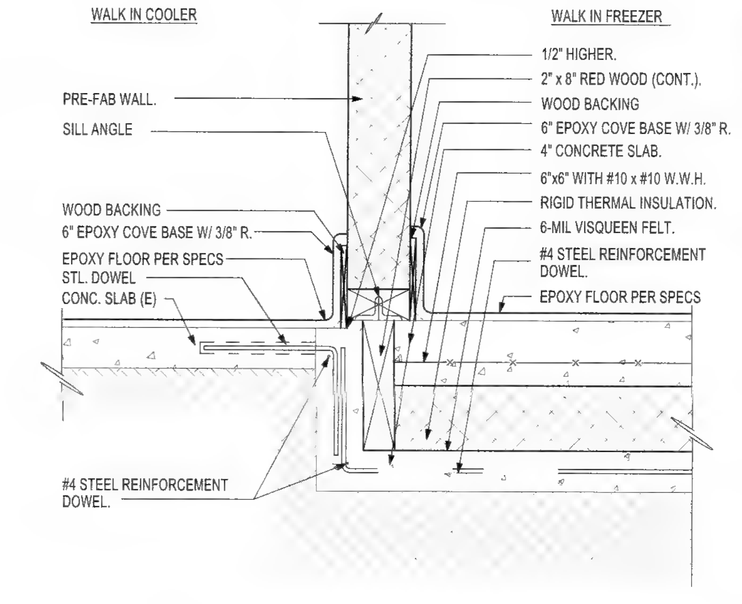

WALL SECTION AT W.I.C. / W.I.F. (1)
SCALE: 1 1/2" = 1'-0"

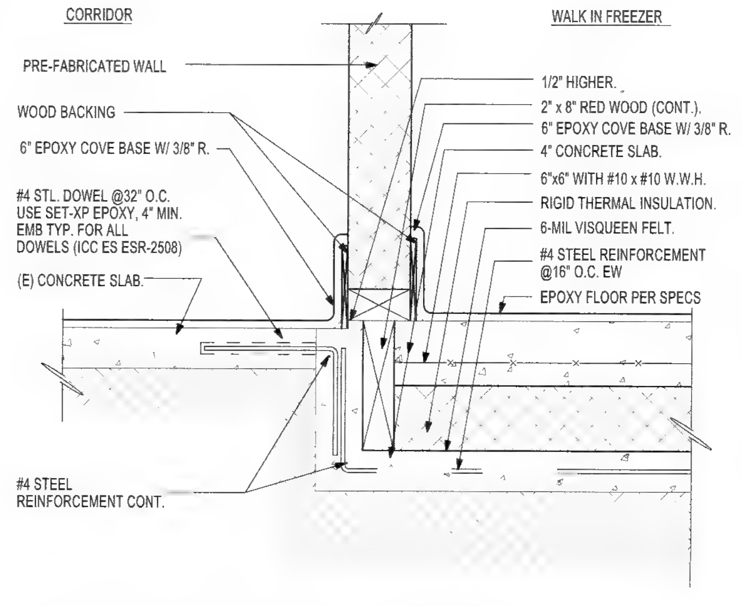

WALL SECTION AT CORRIDOR / W.I.F. (2)
SCALE: 1 1/2" = 1'-0"

Alameda County
Dept. of Environmental Health
Approved By: T. Tran

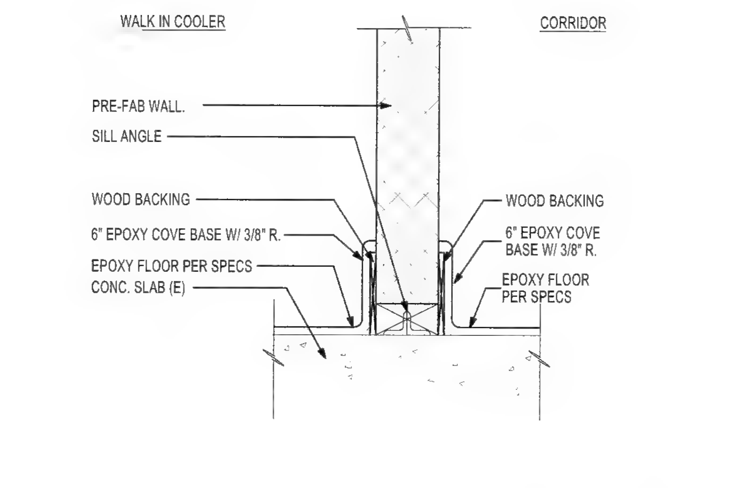

WALL SECTION AT CORRIDOR / W.I.C. (3)
SCALE: 1 1/2" = 1'-0"

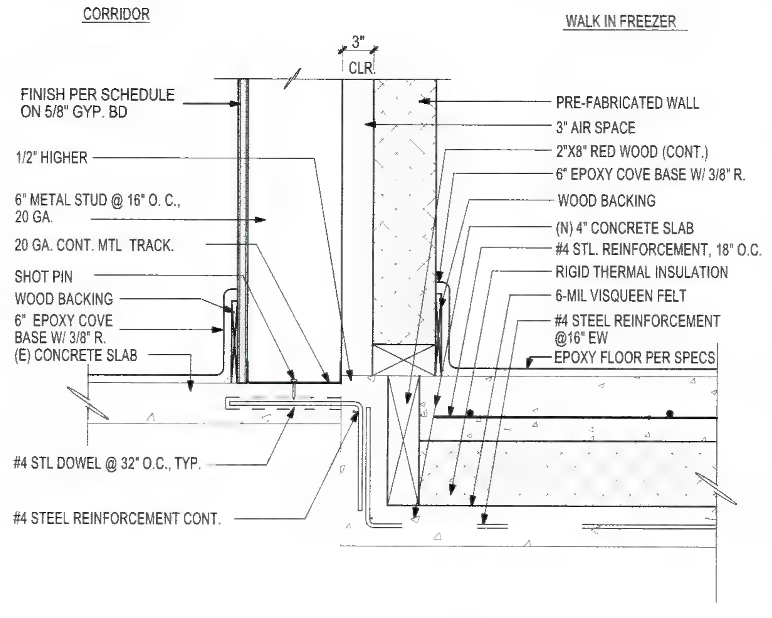

WALL SECTION AT CORRIDOR / W.I.F. (4)
SCALE: 1 1/2" = 1'-0"

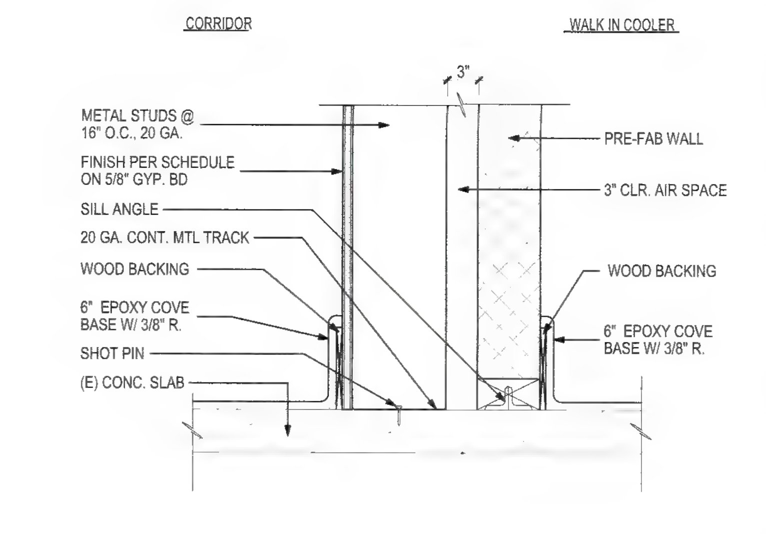

WALL SECTION AT CORRIDOR / W.I.C. (5)
SCALE: 1 1/2" = 1'-0"

CO-AR DESIGN, INC.
680 Brea Canyon Rd., Ste. 178
Diamond Bar, CA 91789

Office: 909-598-0186
http:\\www.coardesign.com

Dennis J. Lee, Architect
dennisl@coardesign.com

THESE DRAWINGS ARE THE PROPERTY OF THE ARCHITECT. THE DESIGNS SHOWN AND DESCRIBED HERIN INCLUDING ALL TECHNICAL DRAWINGS ARE PROPRIETARY AND CANNOT BE COPIED, DUPLICATED OR COMMERCIALLY EXPLOITED, IN WHOLE OR IN PART. THE DRAWINGS AND SPECIFICATIONS SHALL NOT BE USED BY THE OWNER ON OTHER PROJECTS, FOR ADDITIONS TO THIS PROJECT OR FOR COMPLETION OF THIS PROJECT BY OTHERS. THE OWNER AGREES TO HOLD HARMLESS, INDEMNIFY AND DEFEND THE ARCHITECT AGAINST ALL DAMAGES, CLAIMS AND LOSSES INCLUDING DEFENSE COSTS ARISING OUT OF ANY REUSE OF THE PLANS AND SPECIFICATIONS WITHOUT THE WRITTEN AUTHORIZATION OF THE ARCHITECT OF RECORD.

COPYRIGHT © 2022 CO-AR DESIGN, INC. ALL RIGHTS RESERVED

SEAL

LICENSED ARCHITECT
DENNIS JOON HO LEE
C-29168
4/30/2023
RENEWAL DATE
STATE OF CALIFORNIA

NOTES

PROJECT
SALTALK FREMONT KITCHEN TENANT IMPROVEMENT

42550 ALBRAE ST.,
FREMONT, CA 94538

CLIENT
SALTALK, INC.
3334 VICTOR CT.,
SANTA CLARA, CA 95054

SUBMITTALS / REVISIONS

4	1ST PLANNING SUBMITTAL		2/10/22
5	SD		3/7/22
6	1ST HEALTH SUBMITTAL		4/7/22
7	1ST BLDG SUBMITTAL		4/11/22
8	2ND BLDG SUBMITTAL	1	7/29/22
9	3RD USD SUBMITTAL	2	9/12/22
10	2ND HEALTH SUBMITTAL	3	xx/xx/22
11	3RD BLDG SUBMITTAL	4	xx/xx/22

PROJECT NO	202201
SCALE	AS SHOWN
DATE	10/4/2022
DRAWN BY	ED / FW
CHECKED BY	DL

SHEET TITLE
ARCHITECTURAL DETAILS

SHEET NO.
A-5.2

Design No. **U465**

May 25, 2022

Nonbearing Wall Rating — 1 HR.
*** Indicates such products shall bear the UL or cUL Certification Mark for jurisdictions employing the UL or cUL Certification (such as Canada), respectively.**

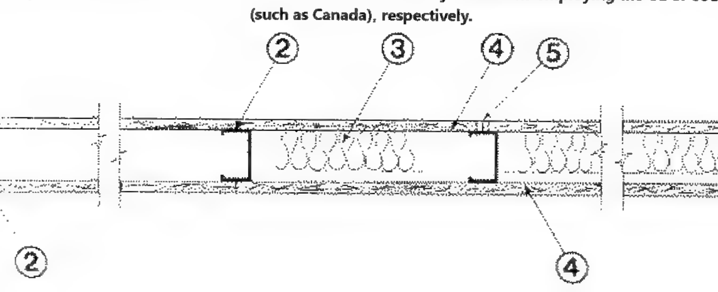

1. **Floor and Ceiling Runners** — (Not Shown) — Channel shaped runners, 3-5/8 in. deep (min), 1-1/4 in. legs, formed from min No. 25 MSG galv steel, attached to floor and ceiling with fasteners spaced 24 in. OC max.

1A. **Framing Members* — Floor and Ceiling Runners** — (Not Shown) — As an alternate to Item 1 — Channel shaped, min 3-5/8 in. deep, attached to floor and ceiling with fasteners 24 in. OC. max.
ALLSTEEL & GYPSUM PRODUCTS INC — Type SUPREME D24/30EQD and Type SUPREME D20

CONSOLIDATED FABRICATORS CORP, BUILDING PRODUCTS DIV — Type SUPREME D24/30EQD and Type SUPREME D20

QUAIL RUN BUILDING MATERIALS INC — Type SUPREME D24/30EQD and Type SUPREME D20

SCAFCO STEEL STUD MANUFACTURING CO — Type SUPREME D24/30EQD and Type SUPREME D20

STEEL CONSTRUCTION SYSTEMS INC — Type SUPREME D24/30EQD and Type SUPREME D20

TELLING INDUSTRIES L L C — Type SUPREME D24/30EQD and Type SUPREME D20

UNITED METAL PRODUCTS INC — Type SUPREME D24/30EQD and Type SUPREME D20

1B. **Framing Members* — Floor and Ceiling Runners** — Not Shown — In lieu of Item 1 — For use with Item 2B, proprietary channel shaped runners, 1-1/4 in. wide by min 3-5/8 in. deep fabricated from min 0.020 in. thick galv steel, attached to floor and ceiling with fasteners spaced 24 in. OC max.
CALIFORNIA EXPANDED METAL PRODUCTS CO — Viper20™ Track

MARINO/WARE, DIV OF WARE INDUSTRIES INC — Viper20™ Track

IMPERIAL MANUFACTURING GROUP INC — Viper20™ Track

1C. **Floor and Ceiling Runners** — (Not Shown) — For use with Item 2C — Channel shaped, fabricated from min 20 MSG corrosion-protected or galv steel, min depth to accommodate stud size, with min 1 in. long legs, attached to floor and ceiling with fasteners spaced max 24 in. OC.

1D. **Framing Members* — Floor and Ceiling Runners** — Not Shown — In lieu of Items 1 through 1C — For use with Item 2D and 4G only, proprietary channel shaped runners, 1-1/4 in. deep by min 3-5/8 in. wide fabricated from min 0.018 in. thick galv steel, attached to floor and ceiling with fasteners spaced 24 in. OC max.
CLARKDIETRICH BUILDING SYSTEMS — CD ProTRAK

DMFCWBS L L C — ProTRAK

MBA METAL FRAMING — ProTRAK

RAM SALES L L C — Ram ProTRAK

STEEL STRUCTURAL PRODUCTS L L C — Tri-S ProTRAK

Alameda County
Dept. of Environmental Health
Approved By: T. Tran

1E. **Framing Members* — Floor and Ceiling Runners** — Not Shown — In lieu of Items 1 through 1D — For use with Item 2E and 4I only, proprietary channel shaped runners, 1-1/4 in. deep by min 3-5/8 in. wide fabricated from min 0.018 in. thick galv steel, attached to floor and ceiling with fasteners spaced 24 in. OC max.
TELLING INDUSTRIES L L C — TRUE-TRACK™

1F. **Framing Members* — Floor and Ceiling Runners** — Not Shown — In lieu of Items 1 through 1E — For use with Item 2, channel shaped runners, 1-1/4 in. deep by min 3-5/8 in. wide fabricated from min 25 MSG steel, attached to floor and ceiling with fasteners spaced 24 in. OC max.
KIRII (HONG KONG) LTD — Type KIRII

1G. **Framing Members* — Floor and Ceiling Runners** — Not Shown — In lieu of Items 1 through 1F — For use with Item 2, channel shaped runners, 1-1/4 in. deep by min 3-5/8 in. wide, attached to floor and ceiling with fasteners spaced 24 in. OC max.
STUDCO BUILDING SYSTEMS — CROCSTUD Track

1H. **Floor and Ceiling Runners** — (Not Shown) — Channel shaped, fabricated from min 0.02 in. galv steel, min width to accommodate stud size, with min 1 in. long legs, for use with studs specified below and fabricated from min 0.02 in. galv steel or thicker, attached to floor and ceiling with fasteners spaced max 24 in. OC.
MARINO/WARE, DIV OF WARE INDUSTRIES INC — Viper20™ Track VT100

IMPERIAL MANUFACTURING GROUP INC — Viper20™ Track VT100

1I. **Framing Members* — Floor and Ceiling Runners** — Not Shown — In lieu of Item 1 — For use with Item 2H, proprietary channel shaped runners, 1-1/4 in. wide by min 3-5/8 in. deep fabricated from min 0.020 in. thick galv steel, attached to floor and ceiling with fasteners spaced 24 in. OC max.
MARINO/WARE, DIV OF WARE INDUSTRIES INC — Viper20™ Track

1J. **Framing Members* — Floor and Ceiling Runners** — Not Shown — In lieu of Items 1 — For use with Item 2 L, proprietary channel shaped runners, 1-1/4 in. deep by min 3-5/8 in. wide fabricated from min 0.018 in. thick galv steel, attached to floor and ceiling with fasteners spaced 24 in. OC max.
RESCUE METAL FRAMING, L L C — AlphaTRAK

1K. **Framing Members* — Floor and Ceiling Runners** — Not Shown — In lieu of Item 1 — For use with Item 2M, proprietary channel shaped runners, 1-1/4 in. wide by min 3-5/8 in. deep, fabricated from min 25 MSG (0.018 in. min. bare metal thickness), attached to floor and ceiling with fasteners spaced 24 in. OC max.
CALIFORNIA EXPANDED METAL PRODUCTS CO — Viper X Track

1L. **Framing Members* — Floor and Ceiling Runners** — Not Shown — In lieu of Item 1 — For use with Item 2N, proprietary channel shaped runners, 1-1/4 in. wide by min 3-5/8 in. deep fabricated from min 0.020 in. thick galv steel, attached to floor and ceiling with fasteners spaced 24 in. OC max.
CRACO MFG INC — SmartTrack20™

2. **Steel Studs** — Channel shaped, 3-5/8 in. deep (min), formed from min No. 25 MSG galv steel spaced 24 in. OC max. Studs to be cut 3/4 in. less than assembly height.

2A. **Framing Members* — Steel Studs** — As an alternate to Item 2 — Channel shaped studs, min 3-5/8 in. deep, spaced a max of 24 in. OC. Studs to be cut 3/4 in. less than assembly height.
ALLSTEEL & GYPSUM PRODUCTS INC — Type SUPREME D24/30EQD and Type SUPREME D20

CONSOLIDATED FABRICATORS CORP, BUILDING PRODUCTS DIV — Type SUPREME D24/30EQD and Type SUPREME D20

QUAIL RUN BUILDING MATERIALS INC — Type SUPREME D24/30EQD and Type SUPREME D20

SCAFCO STEEL STUD MANUFACTURING CO — Type SUPREME D24/30EQD and Type SUPREME D20

STEEL CONSTRUCTION SYSTEMS INC — Type SUPREME D24/30EQD and Type SUPREME D20

TELLING INDUSTRIES L L C — Type SUPREME D24/30EQD and Type SUPREME D20

UNITED METAL PRODUCTS INC — Type SUPREME D24/30EQD and Type SUPREME D20

2B. **Framing Members* — Steel Studs** — Not Shown — In lieu of Item 2 — For use with Item 1B, proprietary channel shaped steel studs, 1-1/4 in. wide by min 3-5/8 in. deep fabricated from min 0.020 in. thick galv steel. Studs cut 3/4 in. less in length than assembly height.
CALIFORNIA EXPANDED METAL PRODUCTS CO — Viper20™

CRACO MFG INC — SmartStud20™

MARINO/WARE, DIV OF WARE INDUSTRIES INC — Viper20™

IMPERIAL MANUFACTURING GROUP INC — Viper20™

2C. **Steel Studs** — (As an alternate to Item 2, For use with Item 1C) — Channel shaped, fabricated from min 20 MSG corrosion-protected or galv steel, 3 1/2 in. min depth, spaced a max of 16 in. OC. Studs friction-fit into floor and ceiling runners. Studs to be cut 5/8 to 3/4 in. less than assembly height. See materials in Item(s) 4 that require Item 2C studs.

2D. **Framing Members* — Steel Studs** — As an alternate to Items 2 through 2C — For use with Item 1D and 4G only, channel shaped studs, min 3-5/8 in. wide fabricated from min 0.018 in. thick galv steel, spaced a max of 24 in. OC. Studs to be cut 1/2 in. less than assembly height.
CLARKDIETRICH BUILDING SYSTEMS — CD ProSTUD

DMFCWBS L L C — ProSTUD

MBA METAL FRAMING — ProSTUD

RAM SALES L L C — Ram ProSTUD

STEEL STRUCTURAL PRODUCTS L L C — Tri-S ProSTUD

2E. **Framing Members* — Steel Studs** — As an alternate to Items 2 through 2D — For use with Item 1E and 4I only, channel shaped studs, min 3-5/8 in. wide fabricated from min 0.018 in. thick galv steel, spaced a max of 24 in. OC. Studs to be cut 1/2 in. less than assembly height.
TELLING INDUSTRIES L L C — TRUE-STUD™

2F. **Framing Members* — Steel Studs** — As an alternate to Items 2 through 2E — For use with Item 1F, channel shaped studs, min 3-5/8 in. wide fabricated from min 25 MSG steel, spaced a max of 24 in. OC. Studs to be cut 1/2 in. less than assembly height.
KIRII (HONG KONG) LTD — Type KIRII

2G. **Framing Members* — Steel Studs** — Not Shown — In lieu of Item 2 through 2F — For use with Item 1G. Proprietary channel shaped studs, minimum 3-5/8 in. wide, Studs to be cut 1/2 in. less than the assembly height.
STUDCO BUILDING SYSTEMS — CROCSTUD

2H. **Framing Members* — Steel Studs** — Not Shown — In lieu of Item 2 — For use with Item 1I, proprietary channel shaped steel studs, 1-1/4 in. wide by min 3-5/8 in. deep fabricated from min 0.020 in. thick galv steel. Studs cut 3/4 in. less in length than assembly height.
MARINO/WARE, DIV OF WARE INDUSTRIES INC — Viper20™

2I. **Framing Members* — Steel Studs** — In lieu of Item 2 — For use with Item 1, channel shaped studs, fabricated from min 25 MSG corrosion-protected steel, 3-5/8 in. deep (min), spaced 24 in. OC max. Studs to be cut 3/4 in. less than assembly height.
EB METAL INC — NITROSTUD

2J. **Framing Members* — Steel Studs** — In lieu of Item 2 — For use with Item 1, channel shaped studs, fabricated from min 25 MSG corrosion-protected steel, 3-5/8 in. deep (min), spaced 24 in. OC max. Studs to be cut 3/4 in. less than assembly height.
OLMAR SUPPLY INC — PRIMESTUD

2K. **Framing Members* — Steel Studs** — As an alternate to Item 2 — For use with Item 1B (3-5/8 in. wide track), channel shaped studs, fabricated from min 25 MSG corrosion-protected steel, 1-1/4 in. wide by 3-5/8 in. deep, spaced a max of 24 in. OC. Studs to be cut 3/8 to 3/4 in. less than assembly height.
MARINO/WARE, DIV OF WARE INDUSTRIES INC — StudRite™

2L. **Framing Members* — Steel Studs** — As an alternate to Items 2 — For use with Item 1J, channel shaped studs, min 3-5/8 in. wide fabricated from min 0.018 in. thick galv steel, spaced a max of 24 in. OC. Studs to be cut 3/4 in. less than assembly height.
RESCUE METAL FRAMING, L L C — AlphaSTUD

2M. **Framing Members* — Steel Studs** — Not Shown — In lieu of Item 2 — For use with Item 1K, proprietary channel shaped steel studs, min 1-1/4 in. wide by min 3-5/8 in. deep, fabricated from min 25 MSG (0.018 in. min. bare metal thickness). Studs cut 3/4 in. less in length than assembly height.
CALIFORNIA EXPANDED METAL PRODUCTS CO — Viper X

2N. **Framing Members* — Steel Studs** — Not Shown — In lieu of Item 2 — For use with Item 1L, proprietary channel shaped steel studs, 1-1/4 in. wide by min 3-5/8 in. deep fabricated from min 0.020 in. thick galv steel. Studs cut 3/4 in. less in length than assembly height.
CRACO MFG INC — SmartStud20™

3. **Batts and Blankets*** — (Optional) — Mineral wool or glass fiber batts partially or completely filling stud cavity.
See **Batts and Blankets** (BZJZ) category for names of Classified companies.

ROCKWOOL — Type AFB, min. density 1.69 pcf / 27.0 kg/m^3

ROCKWOOL MALAYSIA SDN BHD — Type Acoustical Fire Batts

3A. **Fiber, Sprayed*** — As an alternate to Batts and Blankets (Item 3) — (100% Borate Formulation) — Spray applied cellulose material. The fiber is applied with water to completely fill the enclosed cavity in accordance with the application instructions supplied with the product with a nominal dry density of 2.7 lb/ft^3. Alternate Application Method: The fiber is applied without water or adhesive at a nominal dry density of 3.5 lb/ft^3, in accordance with the application instructions supplied with the product.
U S GREENFIBER L L C — INS735, INS745, INS750LD for use with wet or dry application. INS765LD and INS773LD are to be used for dry application only

3B. **Fiber, Sprayed*** — As an alternate to Batts and Blankets (Item 3) — Spray applied cellulose insulation material. The fiber is applied with water to interior surfaces in accordance with the application instructions supplied with the product. Applied to completely fill the enclosed cavity. Minimum dry density of 4.3 pounds per cubic ft.
NU-WOOL CO INC — Cellulose Insulation

3C. **Fiber, Sprayed*** — As an alternate to Batts and Blankets (Item 3) — Spray applied cellulose fiber. The fiber is applied with water to completely fill the enclosed cavity in accordance with the application instructions supplied with the product. The minimum dry density shall be 4.30 lbs/ft^3.

INTERNATIONAL CELLULOSE CORP — Celbar-RL

3D. **Batts and Blankets*** — For use with Item 8. Nom 3 in. thick, minimum 3.4 pcf mineral wool batts, friction fit between the studs and floor and ceiling runners.
See **Batts and Blankets** (BZJZ) category for names of manufacturers.

3E. **Batts and Blankets*** — For use with Item 4R and 4S. Placed in stud cavities, any min. 3-1/2 in. thick glass fiber insulation bearing the UL Classification Marking as to Surface Burning Characteristics and/or Fire Resistance.
See **Batts and Blankets** (BKNV or BZJZ) Categories for names of Classified companies.

3F. **Fiber, Sprayed*** — As an alternate to Batts and Blankets (Item 3) — Spray-applied cellulose material. The fiber is applied with water to completely fill the enclosed cavity in accordance with the application instructions supplied with the product. To facilitate the installation of the material, any thin, woven or non-woven netting may be attached by any means possible to the outer face the studs. The material shall reach equilibrium moisture content before the installation of materials on either face of the studs. The minimum dry density shall be 5.79 lbs/ft^3.
APPLEGATE HOLDINGS L L C — Applegate Advanced Stabilized Cellulose Insulation

3G. **Foamed Plastic*** — As an alternate to Batts and Blankets (Item 3), for use with Item 4U — Spray applied, foamed plastic insulation, at any thickness from partial fill to completely filling stud cavity. When foamed plastic is used, minimum stud depth shall be 3-1/2 in.

CARLISLE SPRAY FOAM INSULATION — Types SealTite Pro Closed Cell (CC), SealTite Pro Open Cell (OC), SealTite Pro OCX, SealTite Pro No Trim 21, SealTite Pro One Zero, Foamsulate Closed Cell, Foamsulate OCX, Foamsulate 70, and Foamsulate HFO

4. **Gypsum Board*** — 5/8 in. thick, 4 ft wide, attached to steel studs and floor and ceiling track with 1 in. long, Type S steel screws spaced 8 in. OC. along edges of board and 12 in. OC in the field of the board. Joints oriented vertically and staggered on opposite sides of the assembly. When Steel Framing Members* (Item 6 or any alternate clips) are used, gypsum board is screw attached to furring channels with 1 in. long, Type S steel screws spaced 12 in. OC.

AMERICAN GYPSUM CO — Types AG-C, AGX-1, M-Glass, LightRoc

BEIJING NEW BUILDING MATERIALS PUBLIC LTD CO — Type DBX 1

CABOT MANUFACTURING ULC — Type X, 5/8 Type X, Type Blueglass Exterior Sheathing

CGC INC — Types AR, C, IP-AR, IP-X1, IP-X2, IPC AR, SCX, SHX, ULIX, USGX, WRC or WRX (Joint tape and compound, Item 5, optional for use with Type USGX)

CERTAINTEED GYPSUM INC — Types EGRG, GlasRoc, Type X-1, Type C, 5/8" Easi-Lite Type X, Easi-Lite Type X-2

CERTAINTEED GYPSUM INC — Types LGFC2A, LGFC6A, LGFC-C/A, LGFC-WD, LGLLX

GEORGIA-PACIFIC GYPSUM L L C — Types 5, 6, 9, C, DAP, DD, DA, DAPC, DGG, DS, GPFS6, LS, Type X, Veneer Plaster Base - Type X, Water Rated - Type X, Sheathing - Type X, Soffit - Type X, TG-C, GreenGlass Type X, Type X ComfortGuard Sound Deadening Gypsum Board, Type LWX, Veneer Plaster Base-Type LWX, Water Rated-Type LWX, Sheathing Type-LWX, Soffit-Type LWX, Type DGLW, Water Rated-Type DGLW, Sheathing Type-DGLW, Soffit-Type DGLW, Type LW2X, Veneer Plaster Base - Type LW2X, Water Rated - Type LW2X, Sheathing - Type LW2X, Soffit - Type LW2X, Type DGL2W, Water Rated - Type DGL2W, Sheathing - Type DGL2W

NATIONAL GYPSUM CO — Types eXP-C, FSK, FSK-C, FSK-G, FSMR-C, FSW-C, FSW-G, FSW, FSW-3, FSW-5, FSW-6, FSW-8, FSL, RSX.

NATIONAL GYPSUM CO — Riyadh, Saudi Arabia — Type FR, or WR

PABCO BUILDING PRODUCTS L L C, DBA PABCO GYPSUM — Types PG-C, PG-9, PG-11, PGS-WRS, PGI

PANEL REY S A — Types GREX, GRIX, PRC, PRC2, PRX, RHX, MDX, ETX, PRX2

SAINT-GOBAIN GYPROC MIDDLE EAST FZE — Type Gyproc FireStop, Gyproc FireStop MR, Gyproc FireStop M2TECH, Gyproc FireStop ACTIV Air, Gyproc FireStop MR ACTIV'Air, Gyproc FireStop M2TECH ACTIV'Air, Gyproc DuraLine, Gyproc DuraLine MR, Gyproc DuraLine M2TECH, Gyproc DuraLine ACTIV'Air, Gyproc DuraLine MR ACTIV'Air, Gyproc DuraLine M2TECH ACTIV'Air

SIAM GYPSUM INDUSTRY (SARABURI) CO LTD — Type EX-1

THAI GYPSUM PRODUCTS PCL — Type X, Type C

UNITED STATES GYPSUM CO — Type AR, C, FRX-G, IP-AR, IP-X1, IP-X2, IPC-AR, SCX, SHX, ULIX, USGX, WRC, WRX, (Joint tape and compound, Item 5, optional for use with Type USGX)

USG BORAL DRYWALL SFZ LLC — Types C, SCX, USGX (Joint tape and compound, Item 5, optional for use with Type USGX)

USG MEXICO S A DE C V — Type AR, C, IP-AR, IP-X1, IP-X2, IPC-AR, SCX, SHX, USGX, WRC or WRX (Joint tape and compound, Item 5, optional for use with Type USGX)

4A. **Gypsum Board*** — (As alternate to Item 4) — Nom 5/8 in. thick gypsum panels with beveled, square or tapered edges, applied vertically or horizontally. Vertical joints centered over studs and staggered one stud cavity on opposite sides of studs. Horizontal edge joints and horizontal butt joints on opposite sides of studs need not be staggered or backed by steel framing. Panels attached to steel studs and floor runner with 1 in. long Type S steel screws spaced 8 in. OC when applied horizontally, or 8 in. OC along vertical and bottom edges and 12 in. OC in the field when panels are applied vertically. When used in widths other than 48 in., gypsum panels to be installed horizontally. When using ULIX, panels need not be staggered in horizontal applications and screw spacing can be increased to 12 in. OC in field and perimeter.
CERTAINTEED GYPSUM INC — Type X-1, Type C, Type EGRG/ GlasRoc, GlasRoc-2, Type SilentFX, Easi-Lite Type X-2

CGC INC — Types AR, C, IP-AR, IP X1, IP-X2, IPC-AR, SCX, SHX, ULIX, USGX, WRC or WRX (Joint tape and compound, Item 5, optional for use with Type USGX)

CERTAINTEED GYPSUM INC — Types LGFC2A, LGFC6A, LGFC-C/A, LGFC-WD

GEORGIA-PACIFIC GYPSUM L L C — Types DAP, DAPC, DGG, DS

SAINT-GOBAIN GYPROC MIDDLE EAST FZE — Type Gyproc FireStop, Gyproc FireStop MR, Gyproc FireStop M2TECH, Gyproc FireStop ACTIV'Air, Gyproc FireStop MR ACTIV'Air, Gyproc FireStop M2TECH ACTIV'Air, Gyproc DuraLine, Gyproc DuraLine MR, Gyproc DuraLine M2TECH, Gyproc DuraLine ACTIV'Air, Gyproc DuraLine MR ACTIV'Air, Gyproc DuraLine M2TECH ACTIV'Air

THAI GYPSUM PRODUCTS PCL — Type X, Type C

UNITED STATES GYPSUM CO — Types AR, C, FRX-G, IP-AR, IP-X1, IP-X2, IPC-AR, SCX, SHX, ULIX, USGX, WRC, WRX (Joint tape and compound, Item 5, optional for use with Type USGX)

USG BORAL DRYWALL SFZ LLC — Types C, SCX, USGX (Joint tape and compound, Item 5, optional for use with Type USGX)

USG MEXICO S A DE C V — Type AR, C, IP-AR, IP-X1, IP-X2, IPC-AR, SCX, SHX, USGX, WRC or WRX (Joint tape and compound, Item 5, optional for use with Type USGX)

4B. **Gypsum Board*** — (As an alternate to Items 4 or 4A) — Nom 3/4 in. thick, 4 ft wide, installed as described in Item 4A with screw length increased to 1-1/4 in.
CGC INC — Types AR, IP-AR

UNITED STATES GYPSUM CO — Types AR, IP-AR

USG MEXICO S A DE C V — Types AR, IP-AR

4C. **Gypsum Board*** — As an alternate to Items 4, 4A, and 4B — Nom. 5/8 in. thick gypsum panels, with square edges, applied horizontally. Gypsum panels fastened to framing with 1 in. long bugle head steel screws spaced a max 8 in. OC, with last 2 screws 3/4 in. and 4 in. from each edge of board. Horizontal joints need not be backed by steel framing. Horizontal edge joints and horizontal butt joints on opposite sides of studs on interior walls need not be staggered or backed by steel framing.
GEORGIA-PACIFIC GYPSUM L L C — Type DGG, GreenGlass Type X

4D. **Gypsum Board*** — As an alternate to Items 4, 4A, 4B, and 4C — Nom. 5/8 in. thick gypsum panels applied vertically or horizontally. Vertical joints centered over studs and staggered one stud cavity on opposite sides of studs. Horizontal edge joints and horizontal butt joints on opposite sides of studs need not be staggered or backed by steel framing. Gypsum panels fastened to framing with 1 in. long Type S steel screws 12 in. OC along vertical edges and in the field. Screws spaced a max 12 in. along the top and bottom edges of the wall for both vertical and horizontal applications. When used in widths other than 48 in., gypsum panels to be installed horizontally.
NATIONAL GYPSUM CO — Types eXP-C, FSK, FSK-C, FSK-G, FSL, FSW-C, FSW-G, FSW, FSW-3, FSW-5, FSW-6, FSMR-C

4E. **Gypsum Board*** — (As an alternate to Items 4 through 4D) — Installed as described in Item 4. 5/8 in. thick, 4 ft. wide, applied vertically only and fastened to the studs and plates with 1 in. long, Type S steel screws spaced, 12 in. OC.
NATIONAL GYPSUM CO — Type SBWB

4F. **Gypsum Board*** — (Not Shown) — (As an alternate to Item 4 when used as the base layer on one or both sides of wall. For direct attachment only to steel studs Item 2C) - Nom 5/8 in. thick lead backed gypsum panels with beveled, square or tapered edges, applied vertically. Vertical joints centered over studs and staggered min 1 stud cavity on opposite sides of studs. Gypsum board secured to studs with 1-1/4 in. long Type S-12 steel screws spaced 8 in. OC at perimeter and 12 in. OC in the field.
RAY-BAR ENGINEERING CORP — Type RB-LBG

4G. **Gypsum Board*** — (As an alternate to Items 4 through 4F) — For use with Items 1D and 2D only, 5/8 in. thick, 4 ft wide, attached to steel studs and floor and ceiling track with 1 in. long, Type S steel screws spaced 8 in. OC. along edges of board and 12 in. OC in the field of the board. Joints oriented vertically and staggered on opposite sides of the assembly. When using ULIX, panels need not be staggered in horizontal applications and screw spacing can be increased to 12 in. OC in field and perimeter.
CGC INC — Type SCX, ULIX

CERTAINTEED GYPSUM INC — Type LGFC6A, LGFC-C/A

NATIONAL GYPSUM CO — Types FSW

UNITED STATES GYPSUM CO — Type SCX, ULIX

USG BORAL DRYWALL SFZ LLC — Type SCX

4H. **Gypsum Board*** — (As an alternate to Items 4 through 4G) — Nominal 5/8 in. thick, 4 ft wide panels, applied vertically and secured as described in Item 4.
PABCO BUILDING PRODUCTS L L C, DBA PABCO GYPSUM — Type QuietRock ES

4I. **Gypsum Board*** — (As an alternate to Items 4 through 4F) — 5/8 in. thick, 4 ft wide, attached to steel studs and floor and ceiling track with 1 in. long, Type S steel screws spaced 8 in. OC. along edges of board and 12 in. OC in the field of the board. Joints oriented vertically and staggered on opposite sides of the assembly. When using ULIX, panels need not be staggered in horizontal applications and screw spacing can be increased to 12 in. OC in field and perimeter. When using ULIX, panels need not be staggered in horizontal applications and screw spacing can be increased to 12 in. OC in field and perimeter.
CGC INC — Types SCX, ULIX

UNITED STATES GYPSUM CO — Types SCX, ULIX

USG BORAL DRYWALL SFZ LLC — Type SCX

4J. **Gypsum Board*** — (Not Shown) — (As an alternate to Item 4 when used as the base layer on one or both sides of wall. For direct attachment only to steel studs Item 2C) — Nom 5/8 in. thick lead backed gypsum panels with beveled, square or tapered edges, applied vertically. Vertical joints centered over studs and staggered min 1 stud cavity on opposite sides of studs. Gypsum board secured to studs with 1-1/4 in. long Type S-12 steel screws spaced 8 in. OC at perimeter and 12 in. OC in the field. To be used with Lead Batten Strips (see Item 9A) or Lead Discs (see Item 10A).

4O. **Gypsum Board*** — As an alternate to Items 4, 4A, 4B, and 4C — Two layers Nom. 5/16 in. thick gypsum panels applied vertically or horizontally. Horizontal edge joints and horizontal butt joints on opposite sides of studs need not be staggered or backed by steel framing. Horizontal joints on the same side need not be staggered. When applied horizontally, both layers of gypsum board fastened to each side of framing with 1 in. long Type S steel screws spaced 8 in. OC and staggered 4 in. OC between layers. When applied vertically, both layers of gypsum board fastened to each side of framing with 1 in. long Type S steel screws spaced 8 in. OC along vertical edges and 12 in. OC in the field, staggered 4 in. OC between layers. Screws spaced a max 12 in. along the top and bottom edges of the wall.
NATIONAL GYPSUM CO — Type FSW

4P. **Gypsum Board*** — As an alternate to Item 4. Nom 5/8 in. thick, 4 ft wide, Nom 5/8 in. thick gypsum panels with beveled, square or tapered edges, applied vertically or horizontally. Vertical joints centered over studs and staggered one stud cavity on opposite sides of studs. Horizontal edge joints and horizontal butt joints on opposite sides of studs need not be staggered or backed by steel framing. Panels attached to steel studs and runners with 1 in. long Type S steel screws spaced 12 in. OC when applied horizontally or vertically. When used in widths other than 48 in., gypsum panels to be installed horizontally.
CGC INC — Type ULIX

UNITED STATES GYPSUM CO — Types ULIX

4Q. **Gypsum Board*** — 3/4 in. thick, 4 ft wide, attached to steel studs and floor and ceiling track as described in Item 4 with screw length increased to min. 1- 1/8 in.
PABCO BUILDING PRODUCTS L L C, DBA PABCO GYPSUM — Type PG-13

4R. **Gypsum Board*** — As an alternate to Item 4D. For use with Item 3E, **Batts and Blankets*** — 5/8 in. thick, 4 ft wide, installed as described in Item 4.
NATIONAL GYPSUM CO — Type FSLX.

4S. **Gypsum Board*** — As an alternate to Item 4. For use with Item 3E, **Batts and Blankets*** — 5/8 in. thick, 4 ft wide, installed as described in Item 4A.
CERTAINTEED GYPSUM INC — Type CLLX

4T. **Wall and Partition Facings and Accessories*** — (As an alternate to 5/8 in. thick board as outlined in Item 4) — Nominal 1 3/8 in. thick, 4 ft wide panels, applied vertically or horizontally. Fastened with #6 x 2 in. long drywall screws spaced 8 in. OC along the perimeter and 12 in. OC in the field.
PABCO BUILDING PRODUCTS L L C, DBA PABCO GYPSUM — Type QuietRock 545

4U. **Gypsum Board*** — (As an alternate to Item 4 when Foam Plastic insulation Item 3G is used) — Any 5/8 in. thick, 4 ft. wide, Gypsum Board listed in Item 4 above. Applied vertically with vertical joints centered over studs and staggered one stud cavity on opposite sides of studs. Gypsum panels secured to studs with 1 in. long Type S steel screws spaced 8 in. OC at perimeter and in the field. For 2 layer assemblies outer layer will be attached to studs over inner layer with the 1-5/8 in. long steel screws spaced 8 in. OC.

4V. **Gypsum Board*** — (As an alternate to Item 4, for 1 hr. rating) — Nom. 5/8 in. thick gypsum panels applied vertically or horizontally. Horizontal edge joints and horizontal butt joints on opposite sides of studs need not be staggered or backed by steel framing. Gypsum panels fastened to framing with 1 in. long Type S steel screws 12 in. OC along vertical edges and in the field. Screws spaced a max 12 in. along the top and bottom edges of the wall for both vertical and horizontal applications.

CERTAINTEED GYPSUM INC — Type X-1, SilentFX, GlasRoc, Type C

5. **Joint Tape and Compound** — Vinyl, dry or premixed joint compound, applied in two coats to joints and screw heads; paper tape, 2 in. wide, embedded in first layer of compound over all joints. As an alternate, nominal 3/32 in. thick gypsum veneer plaster may be applied to the entire surface of Classified veneer baseboard. Joints reinforced. Paper tape and joint compound may be omitted when gypsum boards are supplied with square edges.

6. **Resilient Channel** — (Optional — Not Shown) — 25 MSG galv steel resilient channels spaced vertically max 24 in. OC, flange portion attached to each intersecting stud with 1/2 in. long type S-12 pan head steel screws. May not be used with Item 4F, 4J or 4L.

6A. **Steel Framing Members*** — (Optional, Not Shown, As an alternate to Item 6) — Furring channels and Steel Framing Members as described below:
a. **Furring Channels** — Formed of No. 25 MSG galv steel. 2-9/16 in. or 2-23/32 in. wide by 7/8 in. deep, spaced 24 in. OC perpendicular to studs. Channels secured to studs as described in Item b. Ends of adjoining channels are overlapped 6 in. and tied together with double strand of No. 18 SWG galv steel wire near each end of overlap. As an alternate, ends of adjoining channels may be overlapped 6 in. and secured together with two self-tapping No. 6 framing screws, min 7/16 in. long at the midpoint of the overlap, with one screw on each flange of the channel. Not for use with Items 4F, 4J, or 4L.

b. **Framing Members*** — Used to attach furring channels (Item a) to studs (Item 2). Clips spaced 48 in. OC., and secured to studs with 1-5/8 in. wafer or hex head Type S steel screw through the center grommet. Furring channels are friction fitted into clips. RSIC-1 clip for use with 2-9/16 in. wide furring channels. RSIC-1 (2.75) clip for use with 2-23/32 in. wide furring channels.
PAC INTERNATIONAL L L C — Types RSIC-1, RSIC-1 (2.75)

6B. **Framing Members*** — — (Optional on one or both sides, Not Shown, As an alternate to Item 6) — Furring channel and Steel Framing Members as described below:
a. **Furring Channels** — Formed of No. 25 MSG galv steel. 2-3/8 in. wide by 7/8 in. deep, spaced max. 24 in. OC perpendicular to studs. Channels secured to studs as described in Item b. Gypsum board attached to furring channels as described in Item 4. Not for use with Items 4F, 4J, or 4L.

b. **Steel Framing Members*** — Used to attach furring channels (Item 6Ba) to studs (Item 2). Clips spaced max. 48 in. OC. GENIECLIPS secured to studs with No. 8 x 1-1/2 in. minimum self-drilling, S-12 steel screw through the center grommet. Furring channels are friction fitted into clips.
PLITEQ INC — Type Genie Clip

6C. **Steel Framing Members*** — (Optional, Not Shown, As an alternate to Item 6) — Furring channels and Steel Framing Members as described below:
a. **Furring Channels** — Formed of No. 25 MSG galv steel. Spaced 24 in. OC perpendicular to studs. Channels secured to studs as described in Item b. Ends of adjoining channels overlapped 6 in. and tied together with double strand of No. 18 AWG galvanized steel wire.Gypsum board attached to furring channels as described in Item 4. Not for use with Items 4F, 4J, or 4L.

b. **Steel Framing Members*** — Used to attach furring channels (Item 6Ca) to studs. Clips spaced 48 in. OC., and secured to studs with 2 in. coarse drywall screw with 1 in. diam washer through the center hole. Furring channels are friction fitted into clips.
STUDCO BUILDING SYSTEMS — RESILMOUNT Sound Isolation Clips - Type A237R

6D. **Steel Framing Members*** — (Optional, Not Shown As an alternate to Item 6) — Furring channels and Steel Framing Members as described below:
a. **Furring Channels** — Formed of No. 25 MSG galv steel. Spaced 24 in. OC perpendicular to studs. Channels secured to studs as described in Item 6Db. Ends of adjoining channels overlapped 6 in. and tied together with double strand of No. 18 AWG galvanized steel wire. Gypsum board attached to furring channels as described in Item 4. Not for use with Items 4F, 4J, or 4L.

b. **Steel Framing Members*** — UUsed to attach furring channels (Item 6Da) to studs. Clips spaced 48 in. OC, and secured to studs with No.8 x 2-1/2 in. coarse drywall screw through the center hole. Furring channels are friction fitted into clips.
REGUPOL AMERICA — Type SonusClip

6E. **Steel Framing Members*** — (Optional, Not Shown As an alternate to Item 6) — Resilient channels and Steel Framing Members as described below:
a. **Resilient Channels** — Formed of No. 25 MSG galv steel, spaced 24 in. OC, and perpendicular to studs. Channels secured to studs as described in Item b. Ends of adjoining channels overlapped 6 in. and secured in place with two No. 8 15 x 1/2 in. Philips Modified Truss screws spaced 2-1/2 in. from the center of the overlap. Gypsum board attached to resilient channels as described in Item 4. Not for use with Items 4F, 4J, or 4L.

b. **Steel Framing Members*** — Used to attach resilient channels (Item 6Ea) to studs. Clips spaced 48 in. OC., and secured to studs with No. 8 x 2-1/2 in. coarse drywall screw through the center hole. Resilient channels are secured to clips with one No. 10 x 1/2 in. pan-head self-drilling screw.
KEENE BUILDING PRODUCTS CO INC — Type RC+ Assurance Clip

6F **Steel Framing Members*** — (Optional, Not Shown, As an alternate to Item 6) — Furring channels and Steel Framing Members as described below.
a **Furring Channels** — Formed of No. 25 MSG galv steel. 2-23/32 in. wide by 7/8 in. deep, spaced 24 in. OC perpendicular to studs. Channels secured to studs as described in Item b. Ends of adjoining channels are overlapped 6 in. and tied together with double strand of No. 18 SWG galv steel wire near each end of overlap. As an alternate, ends of adjoining channels may be overlapped 6 in. and secured together with two self-tapping #6 framing screws, min. 7/16 in. long at the midpoint of the overlap, with one screw on each flange of the channel. Gypsum board attached to furring channels as described in Item 4.

b **Steel Framing Members*** — Used to attach furring channels (Item 6Fa) to studs. Clips spaced maximum 48 in. OC. Clips secured to studs with No. 8 x 2-1/2 in. coarse drywall screw through the center grommet. Furring channels are friction fitted into clips.

CLARKDIETRICH BUILDING SYSTEMS — Type ClarkDietrich Sound Clip

6F. **Steel Framing Members*** — (Optional, Not Shown) — Furring channels and Steel Framing Members as described below:
a. **Furring Channels** — Formed of No. 25 MSG galv steel. Spaced 24 in. OC perpendicular to studs. Channels secured to studs as described in Item b. Ends of adjoining channels overlapped 6 in. and tied together with double strand of No. 18 AWG galvanized steel wire. Gypsum board attached to furring channels as described in Item 4. Not for use with Items 4F, 4J, or 4L.

b. **Steel Framing Members*** — Used to attach furring channels (Item 6Fa) to studs. Clips spaced 48 in. OC., and secured to studs with No. 10 x 2 in. screw through the center hole. Furring channels are friction fit into clips.
MASON INDUSTRIES INC — Type CWC-50

7. **Wall and Partition Facings and Accessories*** — (Optional, Not Shown) — Nominal 1/2 in. thick, 4 ft wide panels, for optional use as an additional layer on one or both sides of the assembly. Panels attached in accordance with manufacturer's recommendations. When the QR 500 or QR-510 panel is installed between the steel framing and the UL Classified gypsum board, the required UL Classified gypsum board layer(s) is/are to be installed as indicated as to fastener type and spacing, except that the required fastener length shall be increased by a minimum of 1/2 in. Not evaluated or intended as a substitute for the required layer(s) of UL Classified Gypsum Board.
PABCO BUILDING PRODUCTS L L C, DBA PABCO GYPSUM — Type QuietRock QR-500 and QR-510

8. **Mineral and Fiber Board*** — (Optional, Not Shown) — For optional use as an additional layer on one side of wall. Nom 1/2 in. thick, 4 ft wide with long dimension parallel and centered over studs. Attached to studs and floor and ceiling runners with 1 5/8 in. long Type S steel screws, spaced 12 in. OC and 24 in. OC along all intermediate framing. The required UL Classified gypsum board layer (Item 4M) is to be installed over the Mineral and Fiber Boards. Batts and Blankets, Item 3D, and Adhesive, Item 11, are required.
HOMASOTE CO — Homasote Type 440-32

8A. **Mineral and Fiber Board** — (Optional, Not Shown) — For optional use as an additional layer on one side of wall - Nom 1/2 in. thick, 4 ft wide, square edge fiber boards applied vertically to studs on one side of the wall in between the wood studs and the UL Classified Gypsum Board (Item 4). Fiber boards installed with 1-1/4 in. long, Type S steel screws spaced 12 in. OC max, with the last screws spaced 2 in. and 6 in. from edge of board. Gypsum board (Item 4) installed as indicated as to fastener type and spacing, except that the required fastener length shall be increased by a minimum of 1/2 in. Not evaluated or intended as a substitute for the required layer(s) of UL Classified Gypsum Board. Not evaluated for use with Item 4M.
BLUE RIDGE FIBERBOARD INC — SoundStop

8B. **Mineral and Fiber Board*** — (Optional, Not Shown) — For optional use as an additional layer on one side of wall. Nom 1/2 in. thick, 4 ft wide with long dimension parallel and centered over studs. Attached to studs and floor and ceiling runners with 1-5/8 in. long Type S steel screws, spaced 12 in. OC and 24 in. OC along all intermediate framing. The required UL Classified gypsum board layer is to be installed over the Mineral and Fiber Boards and secured to studs with length of fasteners increased by 1/2 in. over the length specified for installation of the gypsum boards. Batts and Blankets, Item 3, are optional unless otherwise required. Not for use with Items 4F, 4J, 4L, and 4M.
HOMASOTE CO — Homasote Type 440-32

9. **Lead Batten Strips** — (Not Shown, For Use With Item 4E) — Lead batten strips, min 1-1/2 in. wide, max 10 ft long with a max thickness of 0.125 in. Strips placed on the interior face of studs and attached from the exterior face of the stud with two 1 in. long Type S-12 pan head steel screws, one at the top of the strip and one at the bottom of the strip. Lead batten strips to have a purity of 99.9% meeting the Federal specification QQ-L 201f, Grade "C". Lead batten strips required behind vertical joints of lead backed gypsum board (Item 4E) and optional at remaining stud locations. Required behind vertical joints.

9A. **Lead Batten Strips** — (Not Shown, for use with Item 4J) — Lead batten strips, 2 in. wide, max 10 ft long with a max thickness of 0.140 in. Strips placed on the face of studs and attached to the stud with two min. 1 in. long min. Type S-8 pan head steel screws, one at the top of the strip and one at the bottom of the strip or with one min. 1 in. long min. Type S-8 pan head steel screw at the top of the strip. Lead batten strips to have a purity of 99.5% meeting the Federal specification QQ-L-201f, Grades "B, C or D". Lead batten strips required behind vertical joints of lead backed gypsum wallboard (Item 4J) and optional at remaining stud locations.

10. **Lead Discs or Tabs** — (Not Shown, For Use With Item 4E) — Used in lieu of or in addition to the lead batten strips (Item 8) or optional at other locations - Max 3/4 in. diam by max 0.125 in. thick lead discs compression fitted or adhered over steel screw heads or max 1/2 in. by 1-1/4 in. by max 0.125 in. thick lead tabs placed on gypsum boards (Item 4E) underneath screw locations prior to the installation of the screws. Lead discs or tabs to have a purity of 99.9% meeting the Federal specification QQ-L-201f, Grade "C".

10A. **Lead Discs** — (Not Shown, for use with Item 4J) — Max 5/16 in. diam by max 0.140 in. thick lead discs compression fitted or adhered over steel screw heads. Lead discs to have a purity of 99.5% meeting the Federal Specification QQ-L-201f, Grades "B, C or D".

11. **Adhesive** — Not Shown — (For use with Item 8) — Construction grade adhesive applied in vertical, serpentine, nominal 3/8 in. wide beads down the length of both vertical edges of Mineral and Fiber Board (Item 8).

12. **Wall and Partition Facings and Accessories*** — (CLBV) (Optional, Not Shown) — For use with Items 1 to 1I, Items 2 to 2J, Item 3, Items 4 to 4I, Item 5 and Item 6. For maximum fire rating of 1 hour. On one side of the wall, over the first layer of Gypsum Board (Item 4 to Item 4I), install RefleXor membrane with the gold side facing outwards. Membrane installed with T50 staples spaced 12 inches on center in both directions as per manufacturer's instructions, seams in membrane to be overlapped by 2 inches. When RefleXor membrane is used an additional layer of Gypsum Board that is identical to the one used in the first layer and as specified in Item 4 to Item 4I shall be installed over the membrane. The additional layer of Gypsum Board to be installed through the membrane to the stud as specified in Item 4 to Item 4I except the fastener length shall be increased by a minimum of 5/8 inch. Install Batts and Blankets in the stud cavity as per Item 3.

On the other side of the wall, prior to the installation of the Gypsum Board, install Resilient Channels as per Item 6. Over the Resilient Channels install 3/4 inch thick SONOpan panel secured to the Resilient Channels with min. 1-1/4 in. long drywall screws and washers spaced at 16 in. OC on the perimeter of the panel and 8 in. OC in the field of the panel. Over the SONOpan panel install the same Gypsum Board as specified in Item 4 to Item 4I with the fastener length increased by minimum 3/4 inch. Not evaluated or intended as a substitute for the required layer(s) of UL Classified Gypsum Board.

Alternately, on the other side of the wall prior to the installation of the Gypsum Board, install 3/4 in. thick SONOpan panels, secured to one side of studs either horizontally or vertically. Panels secured to each stud with min. 1-1/4 in. long drywall screws spaced 12 in. OC. Over the SONOpan, install 25 MSG galv steel, Resilient Channels, spaced vertically 24 in. OC. Resilient Channels fastened through panels to each stud with min. 2 in. long drywall screws or self-tapping screws. Over the Resilient Channels install Gypsum Board as specified in Item 4 to Item 4I with the specified drywall screws. Panels not evaluated or intended as a substitute for the required layer(s) of UL Classified Gypsum Board.

MSL — RefleXor membrane, SONOpan panel

13. **Barrier Mesh** — (Optional, Not Shown) - Attached to steel studs on one or both sides of the wall using Barrier Mesh Clips spaced at maximum 12 inches on center vertically, using a flat head type screw penetrating through the steel at least 3/8 of an inch. For Steel Studs less than 0.033 inches in thickness, use self-piercing screws. For Steel Studs equal to or greater than 0.033 inches in thickness, use steel drill screws (self-tapping). Gypsum Board (Item 4) to be installed directly over the Barrier Mesh using prescribed screw patterns with lengths increased by a minimum 1/8 in. Barrier Mesh may be installed with the long dimension of the diamond pattern positioned vertically or horizontally. Barrier Mesh joints may occur as butt joints at the framing members and secured using the Barrier Mesh Clips or occur in between framing members as overlapping joints secured using 18 SWG wire ties spaced a maximum 12 in. on center.
CLARKDIETRICH BUILDING SYSTEMS — Barrier Mesh, Barrier Mesh Clips

*** Indicates such products shall bear the UL or cUL Certification Mark for jurisdictions employing the UL or cUL Certification (such as Canada), respectively.**

Last Updated on 2022-05-25

The appearance of a company's name or product in this database does not in itself assure that products so identified have been manufactured under UL Solutions' Follow - Up Service. Only those products bearing the UL Mark should be considered to be Certified and covered under UL Solutions' Follow - Up Service. Always look for the Mark on the product.

UL Solutions permits the reproduction of the material contained in Product iQ subject to the following conditions: 1. The Guide Information, Assemblies, Constructions, Designs, Systems, and/or Certifications (files) must be presented in their entirety and in a non-misleading manner, without any manipulation of the data (or drawings). 2. The statement "Reprinted from Product iQ with permission from UL Solutions" must appear adjacent to the extracted material. In addition, the reprinted material must include a copyright notice in the following format: "©2022 UL LLC."

CO AR

CO-AR DESIGN, INC.
680 Brea Canyon Rd., Ste. 178
Diamond Bar, CA 91789

Office: 909-598-0186
http:\\www.coardesign.com

Dennis J. Lee, Architect
dennisl@coardesign.com

THESE DRAWINGS ARE THE PROPERTY OF THE ARCHITECT THE DESIGNS SHOWN AND DESCRIBED HERIN INCLUDING ALL TECHNICAL DRAWINGS ARE PROPRIETARY AND CANNOT BE COPIED, DUPLICATED OR COMMERCIALLY EXPLOITED, IN WHOLE OR IN PART. THE DRAWINGS AND SPECIFICATIONS SHALL NOT BE USED BY THE OWNER ON OTHER PROJECTS, FOR ADDITIONS TO THIS PROJECT, OR FOR COMPLETION OF THIS PROJECT BY OTHERS. THE OWNER AGREES TO HOLD HARMLESS, INDEMNIFY AND DEFEND THE ARCHITECT AGAINST ALL DAMAGES, CLAIMS AND LOSSES, INCLUDING DEFENSE COSTS, ARISING OUT OF ANY REUSE OF THE PLANS AND SPECIFICATIONS WITHOUT THE WRITTEN AUTHORIZATION OF THE ARCHITECT OF RECORD

COPYRIGHT © 2022 CO-AR DESIGN, INC., ALL RIGHTS RESERVED

SEAL

LICENSED ARCHITECT
DENNIS JOON HO LEE
C-29168
4/30 / 2023
RENEWAL DATE
STATE OF CALIFORNIA

NOTES

PROJECT
SALTALK FREMONT KITCHEN TENANT IMPROVEMENT

42550 ALBRAE ST.,
FREMONT, CA 94538

CLIENT

SALTALK, INC.
3334 VICTOR CT.,
SANTA CLARA, CA 95054

SUBMITTALS/ REVISIONS

4	1ST PLANNING SUBMITTAL		2/10/22
5	SD		3/7/22
6	1ST HEALTH SUBMITTAL		4/7/22
7	1ST BLDG SUBMITTAL		4/11/22
8	2ND BLDG SUBMITTAL	1	7/29/22
9	3RD USD SUBMITTAL	3	9/12/22
10	2ND HEALTH SUBMITTAL	4	xx/xx/22
11	3RD BLDG SUBMITTAL	5	xx/xx/22

PROJECT NO	202201
SCALE	AS SHOWN
DATE	10/4/2022
DRAWN BY	ED / FW
CHECKED BY	DL

SHEET TITLE
UL U465 SPECIFICATIONS

SHEET NO 1

A-5.3

DOOR SCHEDULE

NO.	NEW / EX	TYPE	W	H	THK	DOOR			FRAME		DETAILS			FIRE RATING	HDWR GROUP	KEYNOTES / REMARKS
						MAT	FINISH	GLAZ	MAT	FIN	HEAD	JAMB	SILL			
1	New	W	3'-0"	7'-0"	1 3/4"	SC	SGPT		HM	SGPT					1	
2	New	W	3'-0"	7'-0"	1 3/4"	SC	SGPT		HM	SGPT					1	
3	New	W	3'-0"	7'-0"	1 3/4"	SC	SGPT		HM	SGPT					1	
4	New	W	3'-0"	7'-0"	1 3/4"	SC	SGPT		HM	SGPT					1	
5	New	W	3'-0"	7'-0"	1 3/4"	SC	SGPT		HM	SGPT					1	
6	New	W	3'-0"	7'-0"	1 3/4"	SC	SGPT		HM	SGPT					1	
7	New	W	3'-0"	7'-0"	1 3/4"	SC	SGPT		HM	SGPT					1	
8	New	W	3'-0"	7'-0"	1 3/4"	SC	SGPT		HM	SGPT					1	
9	New	W	3'-0"	7'-0"	1 3/4"	SC	SGPT		HM	SGPT					1	
10	New	W	3'-0"	7'-0"	1 3/4"	SC	SGPT		HM	SGPT					1	
11	New	W	3'-0"	7'-0"	1 3/4"	SC	SGPT		HM	SGPT					1	
12	New	W	3'-0"	7'-0"	1 3/4"	SC	SGPT		HM	SGPT					1	
13	New	W	3'-0"	7'-0"	1 3/4"	SC	SGPT		HM	SGPT					1	
14	New	W	3'-0"	7'-0"	1 3/4"	SC	SGPT		HM	SGPT					1	
15	New	W	3'-0"	7'-0"	1 3/4"	SC	SGPT		HM	SGPT					1	
16	New	W	3'-0"	7'-0"	1 3/4"	SC	SGPT		HM	SGPT					1	
17	New	W	3'-0"	7'-0"	1 3/4"	SC	SGPT		HM	SGPT					2	
18	New	W	3'-0"	7'-0"	1 3/4"	SC	SGPT		HM	SGPT					1	
19	New	W	3'-0"	7'-0"	1 3/4"	SC	SGPT		HM	SGPT					1	
20	New	W	3'-0"	7'-0"	1 3/4"	SC	SGPT		HM	SGPT					1	
21	New	W	3'-0"	7'-0"	1 3/4"	SC	SGPT		HM	SGPT					1	
22	New	R	3'-0"	6'-8"	4"										4	6
23	New	R	3'-0"	6'-8"	4"										4	6
24	New	R	3'-0"	6'-8"	4"										4	6
25	New	W	3'-0"	7'-0"	1 3/4"	SC	SGPT		HM	SGPT					1	
26	New	W	3'-0"	7'-0"	1 3/4"	SC	SGPT		HM	SGPT					1	
27	New	W	3'-0"	7'-0"	1 3/4"	SC	SGPT		HM	SGPT					1	
28	New	W	3'-0"	7'-0"	1 3/4"	SC	SGPT		HM	SGPT					1	
29	New	W	3'-0"	7'-0"	1 3/4"	SC	SGPT		HM	SGPT					1	
30	New	W	3'-0"	7'-0"	1 3/4"	SC	SGPT		HM	SGPT					1	
31	New	W	3'-0"	7'-0"	1 3/4"	SC	SGPT		HM	SGPT					1	
32	New	W	3'-0"	7'-0"	1 3/4"	SC	SGPT		HM	SGPT					1	
33	Existing	AS	3'-10"	7'-7 3/4"	1 3/4"	ALUM	ANOD	CGL-IN-T	ALUM	ANOD					E-2	1, 2, 3, 7 (4)
34	New	W-T	3'-0"	7'-0"	1 3/4"	SC	SGPT		HM	SGPT					3	
35	New	W-T	3'-0"	7'-0"	1 3/4"	SC	SGPT		HM	SGPT					3	
36	New	W	3'-0"	7'-0"	1 3/4"	SC	SGPT		HM	SGPT					2	
37	New	W	3'-0"	7'-0"	1 3/4"	SC	SGPT		HM	SGPT					E-2	
38	New	W-T	3'-0"	7'-0"	1 3/4"	SC	SGPT		HM	SGPT					3	(4)
39	New	W-T	3'-0"	7'-0"	1 3/4"	SC	SGPT		HM	SGPT					3	
40	New	W	3'-0"	7'-0"	1 3/4"	SC	SGPT		HM	SGPT					2	
41	Existing	AS	3'-11"	7'-7 3/4"	1 3/4"	ALUM	ANOD	CGL-IN-T	ALUM	ANOD					E-2	1, 3, 7
42	New	HM	3'-0"	7'-0"	1 3/4"	HM	SGPT		HM	SGPT				(4)	E-1	7
43	Existing	HM	3'-0"	7'-0"	1 3/4"	HM	SGPT		HM						E-1	2, 3, 7
44	Existing	S-R	10'-0"	14'-0"	1 3/4"	STL	SGPT		STL						4	2, 3
45	Existing	S-R	10'-0"	10'-0"	1 3/4"	STL	SGPT		STL						4	2, 3
46	New	W	3'-0"	7'-0"	1 3/4"	SC	SGPT		HM	SGPT					2	(4)

HDWR GROUP

E-1

3 HINGES
ENTRANCE LATCH
SELF CLOSING DOOR CLOSER
DOOR VIEWER
WEATHER STRIPPING
DRIP CAP
DOOR SWEEP
THRESHOLD

E-2

FLOOR HINGE
KEY LOCK
PUSH / PULL HDWR
SELF CLOSING DOOR CLOSER
WEATHER STRIPPING
THRESHOLD

1

3 HINGES
ENTRANCE LATCH
SELF CLOSING DOOR CLOSER
KICK PLATE
DOOR STOP

2

3 HINGES
PASSAGE LATCH
SELF CLOSING DOOR CLOSER
KICK PLATE
DOOR STOP

3

3 HINGES
PUSH / PULL HDWR
SELF CLOSING DOOR CLOSER
KICK PLATE
DOOR STOP

4

HDWR BY MANUF.

DOOR TYPES

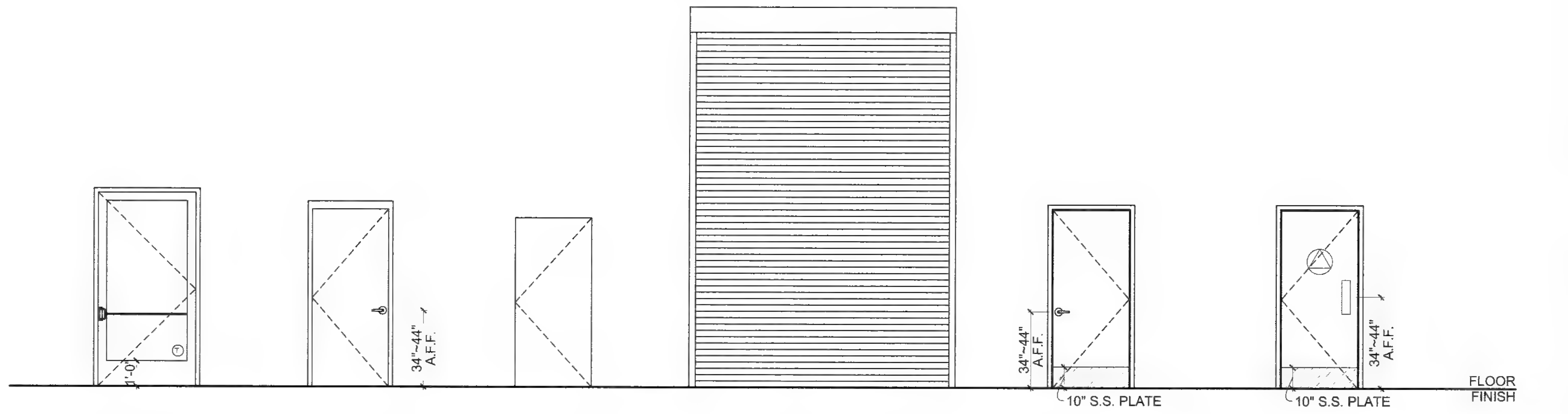

AS — ALUMINUM STOREFRONT (EXISTING)
HM — HOLLOW METAL DOOR
R — W.I.C. / W.I.F. DOOR
S-R — STEEL ROLL UP DOOR (EXISTING)
W — FLUSH WOOD DOOR
W-T — FLUSH WOOD DOOR - RESTROOM

NOTES

GENERAL DOOR NOTES:

A. GLASS & GLAZING AT LOCATIONS SUBJECT TO HUMAN IMPACT SHALL COMPLY WITH 2021 IBC STANDARD.

B. MAXIMUM DOOR OPENING EFFORTS SHALL BE 5 LBS AT EXTERIOR AND INTERIOR DOORS, AND 15 LBS AT FIRE DOORS.

C. ALL DOORS (UNLESS NOTED OTHERWISE) SHALL BE EQUIPPED WITH SINGLE-EFFORT, NON-GRASP HARDWARE (I.E., LEVER) BETWEEN 34" AND 44" ABOVE THE FLOOR.

D. HARDWARE SHALL BE REPLACED FOR ANY EXISTING DOORS TO REMAIN.

E. ALL EXTERIOR DOORS SHALL BE PROVIDED WITH DRIP CAP, DOOR SWEEP, THRESHOLD, AND WEATHER STRIPPING.

F ALL HARDWARE FINISH SHALL BE SATIN CHROME PLATED 626 UNLESS NOTED OTHERWISE.

G. HARDWARE SHALL BE COMMERCIAL GRADE SCHLAGE, VON DUPRIN, YALE, IVES, LCN, MCKINNEY OR APPROVED EQUAL. PROVIDE SUBMITTALS FOR APPROVAL.

H. EACH PANE OF SAFETY GLAZING INSTALLED IN HAZARDOUS LOCATIONS SHALL BE IDENTIFIED BY A MANUFACTURER'S DESIGNATION SPECIFYING WHO APPLIED THE DESIGNATION. THE MANUFACTURER OR INSTALLED AND THE SAFETY-GALZING STANDARD.

I. ALL EXTERIOR DOORS SHALL BE WELL FITTED AND SELF-CLOSING.

DOOR KEYNOTES:

1. A. THE LOCKING DEVICE SHALL BE READILY DISTINGUISHABLE AS LOCKED
   B. PROVIDE SIGN WITH 1" HIGH LETTERS ON CONTRASTING BACKGROUND AT DOOR TRANSOM ON THE EGRESS SIDE TO READ: "THIS DOOR TO REMAIN UNLOCKED WHEN BUILDING IS OCCUPIED".
   C. THE USE OF KEY OPERATED LOCKING DEVICE IS REVOKABLE BY BUILDING OFFICIAL FOR DUE CAUSE.
2. PROVIDE DOOR ACTIVATED AIR CURTAIN @ INTERIOR SIDE. AN AIR CURTAIN INSTALLED INSIDE THE BUILDING SHALL PRODUCE A DOWNWARD AND OUTWARD AIR FLOW NOT LESS THAN 3 INCHES THICK AT THE NOZZLE WITH AN AIR VELOCITY OF NOT LESS THAN 1600 FPM (FEET PER MIN) ACROSS THE ENTIRE OPENING AT A POINT 3 FEET ABOVE THE FLOOR
3. G.C. TO SERVICE DOOR AS REQUIRED.
4. UNDERCUT 1" AT BOTTOM OF DOOR.
5. PROVIDE IDENTIFICATION SIGNS AS REQUIRED ON DOOR AND WALL, SEE 2/A-5.1.
6. DOOR TO BE MANUFACTURED BY REFRIGERATION COMPANY.
7. PROVIDE DOOR THRESHOLD TO COMPLY WITH 3/A-5.1.

DOOR & WINDOW ABBREVIATIONS:

MATERIAL / FINISHES:

ALUM	ALUMINUM
ANOD	ANODIZED
B.ANOD	BRONZE ANODIZED
C.ANOD	CLEAR ANODIZED
GL	GLASS
HC	HOLLOW CORE
HDWD	HARDWOOD
HM	HOLLOW METAL
F.F.	FACTORY FINISH
FOAM	FOAM CORE
MTL	METAL
PCC	POLYMER CELL CORE
PL	PLASTIC LAMINATE
P.MTL	PRESSED METAL
P.NICK	POLISHED NICKEL
PT	PAINTED
S.ANOD	SATIN ANODIZED
SC	SOLID CORE
SGPT	SEMI-GLOSS PAINT
S.S.	STAINLESS STEEL
STL	STEEL
STN	STAIN
WD	WOOD

GLAZING TYPE:

CGL	CLEAR GLASS
OGL	OBSCURE GLASS
TGL	TINTED GLASS
-IN	INSULATED, DOUBLE PANE
-T	TEMPERED

Alameda County
Dept. of Environmental Health
Approved By: T. Tran

CO-AR DESIGN, INC.
680 Brea Canyon Rd., Ste. 178
Diamond Bar, CA 91789

Office: 909-598-0186
http:\\www.coardesign.com

Dennis J. Lee, Architect
dennisl@coardesign.com

THESE DRAWINGS ARE THE PROPERTY OF THE ARCHITECT. THE DESIGNS SHOWN AND DESCRIBED HERIN INCLUDING ALL TECHNICAL DRAWINGS ARE PROPRIETARY AND CANNOT BE COPIED, DUPLICATED OR COMMERCIALLY EXPLOITED, IN WHOLE OR IN PART. THE DRAWINGS AND SPECIFICATIONS SHALL NOT BE USED BY THE OWNER ON OTHER PROJECTS, FOR ADDITIONS TO THIS PROJECT, OR FOR COMPLETION OF THIS PROJECT BY OTHERS. THE OWNER AGREES TO HOLD HARMLESS, INDEMNIFY AND DEFEND THE ARCHITECT AGAINST ALL DAMAGES, CLAIMS AND LOSSES INCLUDING DEFENSE COSTS ARISING OUT OF ANY REUSE OF THE PLANS AND SPECIFICATIONS WITHOUT THE WRITTEN AUTHORIZATION OF THE ARCHITECT OF RECORD.

COPYRIGHT © 2022 CO-AR DESIGN, INC.
ALL RIGHTS RESERVED

SEAL
LICENSED ARCHITECT
DENNIS JOON HO LEE
C-29168
4/30/2023
RENEWAL DATE
STATE OF CALIFORNIA

NOTES

PROJECT
SALTALK FREMONT KITCHEN TENANT IMPROVEMENT

42550 ALBRAE ST.,
FREMONT, CA 94538

SALTALK, INC.
3334 VICTOR CT.,
SANTA CLARA, CA 95054

4	1ST PLANNING SUBMITTAL		2/10/22
5	SD		3/7/22
6	1ST HEALTH SUBMITTAL		4/7/22
7	1ST BLDG SUBMITTAL		4/11/22
8	2ND BLDG SUBMITTAL	1	7/29/22
9	3RD USD SUBMITTAL	3	9/12/22
10	2ND HEALTH SUBMITTAL	4	xx/xx/22
11	3RD BLDG SUBMITTAL	5	xx/xx/22

PROJECT NO.	202201
SCALE	AS SHOWN
DATE	10/4/2022
DRAWN BY	ED / FW
CHECKED BY	DL

SHEET TITLE
DOOR SCHEDULES

A-6.1

GENERAL SITE WORK:

1. THE CONTRACTOR AND ALL SUBCONTRACTORS SHALL HAVE APPROVED AND SIGNED PLANS PRIOR TO BEGINNING CONSTRUCTION. A SET OF SIGNED AND APPROVED PLANS ARE TO BE ON THE JOB SITE AT ALL TIMES DURING CONSTRUCTION. NO ONE SHALL USE PLANS NOT APPROVED FOR CONSTRUCTION.
2. THE ENGINEER ASSUMES NO RESPONSIBILITY FOR ANY WORK PERFORMED BY THE CONTRACTOR OR OWNER BASED ON PLANS WHICH HAVE NOT BEEN SIGNED AND SEALED BY THE ENGINEER AND APPROVED BY THE LOCAL JURISDICTIONS. ALL INFORMATION SHOWN ON PRELIMINARY DRAWINGS IS SUBJECT TO CORRECTION AND CHANGE.
3. WHERE GOVERNING AGENCIES HAVE CONFLICTING SPECIFICATIONS WITH THESE NOTES, THE CONTRACTOR SHALL FOLLOW THE MORE STRINGENT REQUIREMENT.
4. THE CONTRACTOR SHALL MAKE SITE INSPECTIONS PRIOR TO BIDDING TO DETERMINE ALL ITEMS NOT SHOWN AS BID ITEMS WHICH ARE NECESSARY TO PERFORM A COMPLETE AND ACCEPTABLE JOB. ALL SUCH ITEMS SHALL BE NOTED AND INCLUDED IN THE BID.
5. IF THE CONTRACTOR ENCOUNTERS ERRORS OR DISCREPANCIES ON THE DRAWINGS, OR SITE CONDITIONS WHICH PREVENT OR DELAY THE COMPLETION OF WORK AS INDICATED, THE CONTRACTOR SHALL NOTIFY THE OWNER AND ENGINEER BY THE TIME OF BID OF SUCH ERRORS, DISCREPANCIES AND OMISSIONS. THE CONTRACTOR SHALL INDEMNIFY AND HOLD THE ENGINEER AND OWNER HARMLESS IF, AFTER CONTRACTING FOR THE WORK HE HAS MONETARY DAMAGE BECAUSE OF SITE CONDITIONS, ERRORS, DISCREPANCIES OR OMISSIONS AT THE TIME OF BID.
6. THE CONTRACTOR SHALL NOT BEGIN WORK SHOWN ON THESE PLANS UNTIL THE ENGINEER'S SIGNATURE OF APPROVAL IS AFFIXED HEREON AND ALL APPLICABLE PERMITS HAVE BEEN OBTAINED.
7. ALL MATERIALS, METHODS, AND WORKMANSHIP SHALL CONFORM TO THE SPECIFICATION OF THE AGENCIES INVOLVED AND ALL WORK SUBJECT TO THEIR APPROVAL.
8. THESE PLANS ARE CHECKED BY THE LOCAL JURISDICTION, BUT SUCH CHECKING AND/OR APPROVAL DOES NOT RELIEVE THE DEVELOPER AND CONTRACTOR FROM HIS/HER RESPONSIBILITY TO CORRECT ERRORS, OMISSIONS OR MAKE CHANGES REQUIRED BY CONDITIONS DISCOVERED IN THE FIELD DURING THE COURSE OF CONSTRUCTION. THE CONTRACTOR SHALL IMMEDIATELY NOTIFY THE ENGINEER OF ANY ERROR'S FOUND IN THESE PLANS OR CONSTRUCTION STAKING DISCREPANCIES.
9. BEFORE COMMENCING WORK, ALL PLANS AND SCHEDULES MUST BE SUBMITTED AND APPROVED.
10. CONTRACTOR IS NOT TO WORK OR TRESPASS ON ANY PROPERTY WITHOUT WRITTEN PERMISSION.
11. THE CONTRACTOR OR DEVELOPER SHALL OBTAIN ALL NECESSARY ENCROACHMENT PERMITS PRIOR TO STARTING ANY WORK WITHIN THE PUBLIC RIGHT-OF-WAY.
12. THE CONTRACTOR SHALL ASSUME SOLE AND COMPLETE RESPONSIBILITY FOR CONSTRUCTION OF THIS PROJECT, INCLUDING SAFETY OF ALL PERSONS AND PROPERTY. THIS REQUIREMENT SHALL APPLY CONTINUOUSLY AND NOT BE LIMITED TO NORMAL WORKING HOURS. THE CONTRACTOR SHALL DEFEND, INDEMNIFY AND HOLD THE OWNER, SURVEYOR AND THE ENGINEER HARMLESS FROM ANY AND ALL LIABILITY, REAL OR ALLEGED, IN CONNECTION WITH THE PERFORMANCE OF WORK ON THIS PROJECT, EXCEPTING FOR LIABILITY ARISING FROM THE SOLE NEGLIGENCE OF THE OWNER, SURVEYOR OR ENGINEER.
13. THE CONTRACTOR SHALL COMPLY WITH ALL LOCAL, STATE, AND FEDERAL SAFETY REGULATIONS PERTAINING TO HIS OPERATIONS. THE CONTRACTOR SHALL ADEQUATELY BARRICADE THE GENERAL PUBLIC FROM THE SITE AND SHALL PROVIDE ALL LIGHTS, SIGNS, BARRICADES, FLAGMEN OR OTHER DEVICES NECESSARY FOR PUBLIC SAFETY.
14. THE CONTRACTOR IS HEREBY NOTIFIED THAT PRIOR TO COMMENCING CONSTRUCTION, HE IS RESPONSIBLE FOR CONTACTING ALL UTILITY COMPANIES FOR VERIFICATION OF THE LOCATIONS OF ALL UNDERGROUND FACILITIES AT THE CONSTRUCTION SITE AND LOCATING WHERE SUCH FACILITIES MAY POSSIBLY CONFLICT WITH THE PLACEMENT OF THE IMPROVEMENTS SHOWN ON THESE PLANS. NOTIFY "UNDERGROUND SERVICE ALERT" (USA) AT LEAST TWO (2) WORKING DAYS IN ADVANCE OF BEGINNING WORK AT (800) 642-2444 OR (800) 227-2600.
15. THE CONTRACTOR IS TO ARRANGE A PRECONSTRUCTION MEETING ON THE JOB SITE WITH THE GOVERNING AGENCIES, UTILITY COMPANIES, OWNER'S DEVELOPER AND/OR REPRESENTATIVES AND GENERAL CONTRACTORS PRIOR TO COMMENCING WORK. THIS MEETING WILL VERIFY SCHEDULES, METHODS AND MATERIALS TO BE USED IN CONSTRUCTION OF THE PROJECT. NOTIFY ALL GOVERNING AGENCIES AT LEAST 48 HOURS IN ADVANCE.
16. CONSTRUCTION SHALL CONFORM TO ALL APPLICABLE CODES AND REGULATIONS.
17. THE CONTRACTOR OR A RESPONSIBLE PARTY WHO HAS THE AUTHORITY TO ACT FOR THE CONTRACTOR SHALL BE ON THE JOB SITE DURING ALL WORKING HOURS.
18. PRIOR TO COMMENCING CONSTRUCTION, THE CONTRACTOR SHALL POTHOLE AND EXPOSE ALL EXISTING UNDERGROUND FACILITIES FOR SERVICE CONNECTIONS AND POSSIBLE UTILITY CONFLICTS. ANY DISCREPANCIES WITH SERVICE LOCATION, SIZE, DEPTH, OR MATERIAL WITH THAT SHOWN ON THESE PLANS SHALL BE REPORTED TO THE OWNER, AFFECTED UTILITIES AND ENGINEER WITHIN 48 HOURS OF DISCOVERY.
19. INSTALLATION OF ALL GRAVITY UTILITIES (i.e., SEWER, STORM DRAIN) SHALL BE FROM THE POINT OF CONNECTION UPSTREAM.
20. IF AT ANY TIME DURING THE COURSE OF CONSTRUCTING THE PROPOSED PROJECT, EVIDENCE OF SOIL AND/OR GROUNDWATER CONTAMINATION WITH HAZARDOUS MATERIAL IS ENCOUNTERED, THE APPLICANT SHALL IMMEDIATELY STOP THE PROJECT AND CONTACT THE ENVIRONMENTAL HEALTH SERVICES HAZARDOUS MATERIALS SECTION. THE PROJECT SHALL REMAIN STOPPED UNTIL THERE IS RESOLUTION OF THE CONTAMINATION PROBLEM TO THE SATISFACTION OF ENVIRONMENTAL HEALTH SERVICES AND TO THE WATER QUALITY CONTROL BOARD.
21. TRASH ENCLOSURE WALLS SHALL BE CONSTRUCTED AND BACKFILLED IN ACCORDANCE WITH THE STRUCTURAL ENGINEER'S AND SOILS ENGINEER'S RECOMMENDATIONS.
22. THE CONTRACTOR SHALL CONTROL DUST AT ALL TIMES DURING CONSTRUCTION.
23. FOR ALL PROJECTS, REGARDLESS OF SIZE, THE CONTRACTOR SHALL IMPLEMENT PRACTICES (BMP's) TO ELIMINATE OR MINIMIZE POLLUTION DISCHARGE CAUSED BY CONSTRUCTION.
24. THE CONTRACTOR SHALL COMPLY WITH THE REQUIREMENTS OF THE STATE OF CALIFORNIA WATER RESOURCES CONTROL BOARD (SWRCB). THE CONTRACTOR SHALL IMPLEMENT AND MONITOR THE STORM WATER POLLUTION PREVENTION IN ACCORDANCE WITH THE SWRCB REGULATIONS.
25. ALL IMPROVEMENTS SHALL BE DONE IN ACCORDANCE WITH THE REQUIREMENTS OF THE GOVERNING AGENCIES STANDARD SPECIFICATIONS AND REQUIREMENTS AND THE LATEST EDITION OF THE STATE OF CALIFORNIA DEPARTMENT OF TRANSPORTATION, STANDARD SPECIFICATIONS.
26. WHERE THE PLANS OR SPECIFICATIONS DESCRIBE PORTIONS OF THE WORK IN GENERAL TERMS, BUT NOT IN COMPLETE DETAIL, IT IS UNDERSTOOD THAT ONLY THE BEST GENERAL PRACTICE IS TO PREVAIL AND THAT ONLY MATERIALS AND WORKMANSHIP OF THE FINEST QUALITY ARE TO BE USED.
27. PLACEMENT OF PROPOSED PUBLIC IMPROVEMENTS AND PROPOSED ONSITE IMPROVEMENTS SHALL NOT BE LIMITED TO THESE PLANS, BUT BE BUILT IN ACCORDANCE WITH THE LOCAL JURISDICTION IMPROVEMENT STANDARDS TO THEIR SATISFACTION.
28. TEMPORARY CONSTRUCTION FENCING: THE CONTRACTOR SHALL INSTALL A 6' TALL, BRIGHTLY COLORED (USUALLY YELLOW OR ORANGE), SYNTHETIC MESH MATERIAL FENCE WITH SIGNS STATING, "THIS TREE TO BE SAVED" AROUND ALL TREES TO BE SAVED PRIOR TO ANY CONSTRUCTION EQUIPMENT BEING MOVED ON-SITE OR ANY CONSTRUCTION ACTIVITIES TAKING PLACE.
29. ARCHAEOLOGICAL ARTIFACTS: IF ANY ARCHEOLOGICAL OR PALEONTOLOGICAL ARTIFACTS ARE UNCOVERED DURING GRADING OR OTHER CONSTRUCTION ACTIVITIES, ALL WORK SHALL BE HALTED WITHIN 100 FEET OF THE FIND AND THE LOCAL JURISDICTION NOTIFIED IMMEDIATELY. A QUALIFIED ARCHAEOLOGIST OR PALEONTOLOGIST SHALL BE RETAINED TO CONDUCT AN ON-SITE EVALUATION AND PROVIDE RECOMMENDATIONS FOR REMOVAL AND/OR PRESERVATION. WORK ON THE PROJECT SITE SHALL NOT RESUME UNTIL THE ARCHAEOLOGIST OR PALEONTOLOGIST HAS HAD A REASONABLE TIME TO CONDUCT AN EXAMINATION AND IMPLEMENT MITIGATION MEASURES DEEMED APPROPRIATE AND NECESSARY BY THE LOCAL JURISDICTION TO REDUCE IMPACTS TO A LESS THAN SIGNIFICANT LEVEL.
30. CONSTRUCTION NOISE: THE CONTRACTOR SHALL INSURE THAT ALL CONSTRUCTION VEHICLES AND EQUIPMENT OPERATED WITHIN CLOSE PROXIMITY OF A RESIDENTIAL DWELLING ARE EQUIPPED WITH PROPERLY OPERATING AND MAINTAINED MUFFLERS. IF CONCERNS ARISE, IT IS THE OWNER'S RESPONSIBILITY TO OBTAIN THE SERVICES OF A QUALIFIED ACOUSTICAL PROFESSIONAL TO VERIFY THE EQUIPMENT HAS PROPER MUFFLERS. CONSTRUCTION NOISE EMANATING FROM ANY CONSTRUCTION ACTIVITIES FOR WHICH A PERMIT IS REQUIRED IS PROHIBITED ON SUNDAYS AND FEDERAL HOLIDAYS, AND SHALL ONLY OCCUR:
    - A. MONDAY THROUGH FRIDAY, 7:00 AM TO 8:00 PM.
    - B. SATURDAYS, 8:00 AM TO 6:00 PM.
    - C. ADVISORY COMMENT: ESSENTIALLY, QUIET ACTIVITIES AND WORK OCCURRING WITHIN AN ENCLOSED BUILDING CAN OCCUR AT OTHER TIMES AS WELL. THESE TIME FRAMES MAY BE WAIVED ON SPECIAL CIRCUMSTANCES, SUCH AS ADVERSE WEATHER CONDITIONS.
31. ALL CONSTRUCTION SITE ACTIVITIES, REGARDLESS OF SIZE, SHALL CONFORM TO THE LOCAL STORM WATER QUALITY REGULATIONS AND THE STATE WATER RESOURCES CONTROL BOARD, NATIONAL POLLUTION DISCHARGE ELIMINATION SYSTEM (NPDES), WASTE DISCHARGE REQUIREMENTS FOR DISCHARGES OF STORM WATER RUNOFF ASSOCIATED WITH CONSTRUCTION ACTIVITY.
32. FOR ALL CONSTRUCTION PROJECTS OVER ONE ACRE, A NOTICE OF INTENT (NOI) SHALL BE FILED WITH THE STATE WATER RESOURCES CONTROL BOARD AND A STORM WATER POLLUTION PREVENTION PLAN (SWPPP) BE PREPARED AND ON-SITE DURING CONSTRUCTION. THIS IS PART OF THE NATIONAL POLLUTANT DISCHARGE ELIMINATION SYSTEM (NPDES) PERMIT PROCESS. CONTRACTOR SHALL ALSO BE IN COMPLIANCE WITH ALL LOCAL STORM WATER QUALITY REGULATIONS.
33. UPON JOB COMPLETION, THE CONTRACTOR SHALL PROVIDE THE OWNER AND ENGINEER WITH ONE COMPLETE SET OF RECORD DRAWINGS WHICH ACCURATELY SHOW ALL FIELD CHANGES. THE CHANGES SHALL BE MARKED ON A CLEAN SET OF DRAWINGS IN CONTRASTING COLORS.
34. IT IS THE RESPONSIBILITY OF THE CONTRACTOR AND SUBCONTRACTOR TO UNDERSTAND THESE DRAWINGS AND THE OBLIGATION TO PERFORM ALL WORK HEREIN. THIS INCLUDES THE INFORMATION ON ALL OTHER SHEETS WITHIN THE CONSTRUCTION DOCUMENTS INCLUDING INFORMATION WHICH OCCURS ON ARCHITECTURAL, STRUCTURAL, PLUMBING, MECHANICAL, ELECTRICAL, LANDSCAPE, AND ARCHITECTURAL PLANS THAT MAY BE REQUIRED TO CORRECTLY COMPLETE THE WORK.
35. ALL EARTH AND SITE WORK SHALL BE PERFORMED IN ACCORDANCE WITH RECOMMENDATIONS AS DEFINED IN THE GEOTECHNICAL REPORT, THE CALIFORNIA BUILDING CODE, AND THE LOCAL JURISDICTION.
36. THE OWNER SHALL RETAIN THE SERVICES OF A QUALIFIED SOILS ENGINEER TO EVALUATE GEOLOGIC AND SOILS CONDITIONS ON THE SITE, PROVIDE EARTHWORK RECOMMENDATIONS, AND INSPECT THE CONTRACTOR'S WORK FOR COMPLIANCE. ALL TESTS SHALL BE CERTIFIED BY THE SOILS ENGINEER WITH ANY TEST WITHIN THE RIGHT-OF-WAY ALSO BEING APPROVED BY THE GOVERNING AGENCY.
37. THE CONTRACTOR SHALL CONTROL DUST, EROSION, AND SEDIMENT AT ALL TIMES DURING CONSTRUCTION. IF GRADING AND CLEARING IMPROVEMENTS ARE INCOMPLETE BY OCTOBER FIRST, THE CONTRACTOR SHALL INSTALL EROSION PROTECTION ON ALL EXPOSED SOIL, INSTALL BMP'S FOR CONTROLLING ANY DRAINAGE FROM THE SITE, AND CLEAN ALL SEDIMENT FROM THE EXISTING STORM DRAIN SYSTEMS.
38. ALL UNSUITABLE AND SURPLUS MATERIAL SHALL BECOME THE PROPERTY OF THE CONTRACTOR AND SHALL BE REMOVED FROM THE SITE AT THE CONTRACTOR'S EXPENSE UNLESS THE OWNER OR ENGINEER SPECIFIES OTHERWISE.
39. PREPARE AND COMPACT SUBGRADE AND PLACE BASE ROCK AND ASPHALT OR CONCRETE PER THE GEOTECHNICAL REPORT AND THEIR RECOMMENDATIONS. REFER TO THE GRADING PLAN FOR SELECTED PAVEMENT SECTION.
40. PAVEMENT THICKNESS SHALL BE WITHIN THE FOLLOWING TOLERANCES: AGGREGATE BASE: 1/2" PLUS OR MINUS. ASPHALT OR CONCRETE: 1/4" PLUS OR MINUS.
41. THE CONTRACTOR SHALL COORDINATE WITH ALL OTHER WORK TO ASSURE THAT ALL UNDERGROUND CONDUITS AND UTILITIES ARE INSTALLED PRIOR TO PAVING. ALL PIPES IN PAVED AREAS SHALL BE PLACED PRIOR TO PLACING AGGREGATE BASE. NO CURB, GUTTER, SIDEWALK OR AGGREGATE BASE SHALL BE PLACED UNTIL UNDERGROUND UTILITIES ARE INSTALLED.
42. WHEN MATCHING THE PAVEMENT ON AN EXISTING ROAD, THE EXISTING PAVEMENT SHALL BE CUT TO A NEAT STRAIGHT LINE PARALLEL WITH THE LANE AND REMOVED BACK TO AN ADEQUATE STRUCTURAL SECTION. THE EXPOSED EDGE AND VERTICAL EDGE OF GUTTER LIP SHALL BE TACKED WITH EMULSION PRIOR TO PAVING.

UTILITIES (GENERAL):

1. THE LOCATIONS OF ALL UNDERGROUND FACILITIES SHOWN ON THIS PLAN ARE APPROXIMATE. A REASONABLE EFFORT HAS BEEN MADE TO LOCATE AND DELINEATE ALL UNDERGROUND FACILITIES; HOWEVER, THE ENGINEER ASSUMES NO LIABILITY FOR THE ACCURACY OR COMPLETENESS OF THE EXISTING FACILITIES SHOWN HEREON OR FOR THE EXISTENCE OF OTHER UNDERGROUND UTILITIES OR OBJECTS WHICH THE CONTRACTOR MAY DISCOVER, BUT ARE NOT SHOWN ON THESE PLANS. THE CONTRACTOR SHALL VERIFY THE LOCATION, BOTH VERTICALLY AND HORIZONTALLY, OF ALL EXISTING FACILITIES AND IMMEDIATELY NOTIFY THE ENGINEER IF ANY SUCH FACILITIES INTERFERE WITH THE CONSTRUCTION OF IMPROVEMENTS. THE CONTRACTOR SHALL STOP WORK UNTIL MITIGATIONS CAN BE MADE. ANY COSTS INCURRED RESULTING FROM THE CONTRACTOR'S FAILURE TO STOP WORK AS DIRECTED SHALL BE THE RESPONSIBILITY OF THE CONTRACTOR.
2. THE CONTRACTOR SHALL LOCATE AND PRESERVE ALL EXISTING FACILITIES INCLUDING GAS, WATER, IRRIGATION, POWER, TELEPHONE, SEWER OR OTHERS WHICH MAY BE PRESENT IN THE AREA OF CONSTRUCTION. THE RESPECTIVE UTILITY COMPANIES SHALL BE NOTIFIED PRIOR TO BEGINNING WORK.
3. PRIOR TO TRENCHING FOR ANY SEWER, THE CONTRACTOR SHALL VERIFY, IN THE FIELD, THE SIZE AND LOCATION OF THE EXISTING PIPES AT THE POINT OF CONNECTION. ANY DEVIATION FROM THE PLANS SHALL BE RESOLVED BY THE DESIGN ENGINEER PRIOR TO TRENCHING.
4. ALL UNDERGROUND UTILITIES SHALL BE INSTALLED PRIOR TO CURB, GUTTER AND SIDEWALK CONSTRUCTION AND PAVING.
5. ALL TRENCHES SHALL BE BACKFILLED IN ACCORDANCE WITH LOCAL STANDARDS AND THE GEOTECHNICAL ENGINEER'S RECOMMENDATIONS.
6. THE CONCRETE CONTRACTOR SHALL STAMP THE LETTER "S" ON THE FACE OF CURB DIRECTLY OVER THE SANITARY SEWER LATERAL.
7. PIPES: IN ADDITION TO THE APPLICABLE ASTM & AWWA SPECIFICATIONS, PIPES SHALL ALSO MEET THE FOLLOWING: THE PIPE SHALL BE HOMOGENEOUS THROUGHOUT, FREE FROM VOIDS, CRACKS, INCLUSIONS, SURFACE UNDULATIONS, AND OTHER DEFECTS, AND REASONABLY UNIFORM IN COLOR, DENSITY, AND OTHER PHYSICAL PROPERTIES. THE PIPE SURFACES, INCLUDING THE JOINING SURFACES OF SPIGOTS AND BELLS, SHALL BE FREE FROM NICKS, GOUGES, SEVERE SCRATCHES, AND OTHER SUCH BLEMISHES. PVC PIPE SHALL BE GREEN OR WHITE UNLESS OTHERWISE APPROVED BY THE ENGINEER.
8. ALL PIPE MATERIAL, SLOPE, COVER AND INSTALLATION SHALL BE IN ACCORDANCE WITH THE GOVERNING AGENCY'S STANDARDS AND REQUIREMENTS.
9. AREA DRAINS, CLEANOUTS, ETC. SHALL BE BROUGHT TO FINISH GRADE AFTER THE FINAL PAVING COURSE IS PLACED.

UTILITY LINE EXCAVATION, BEDDING AND BACKFILL:

1. ALL UTILITY LINE EXCAVATION, BEDDING AND BACKFILL MATERIALS, AND COMPACTION SHALL BE PERFORMED IN ACCORDANCE WITH GOVERNING AGENCY'S REQUIREMENTS. UTILITY LINES SHALL INCLUDE STORM DRAIN, WATER, SEWER, ELECTRICAL, TELEPHONE, GAS, TELEVISION AND LANDSCAPE IRRIGATION LINES.
2. PRIOR TO THE INSTALLATION OF ANY UTILITY LINE, THE TRENCH SHALL BE INSPECTED AND APPROVED BY THE OWNER/DEVELOPER AND UTILITY COMPANY.
3. THE TRENCH SHOULD BE EXAMINED FOR SUBSURFACE SEEPAGE. IF SEEPAGE IS ENCOUNTERED, THE SOILS ENGINEER SHOULD BE CONSULTED SO THAT RECOMMENDATIONS FOR SUBSURFACE DRAINAGE CAN BE MADE. TRENCHES CONTAINING FREE WATER SHOULD BE DE-WATERED PRIOR TO BACKFILLING.
4. UTILITY LINES MAY NOT BE COVERED UNTIL AFTER THEY HAVE BEEN TESTED AND APPROVED. UPON COMPLETION OF THE BACKFILL OPERATIONS, THE UTILITY LINES SHALL BE RETESTED.
5. PROCEDURE AT PIPE ZONE: SELECTED BACKFILL MATERIAL CONSISTING OF LOOSE EARTH OR SAND, FREE FROM STONES, CLODS, OR OTHER DELETERIOUS MATERIAL SHALL BE PLACED IN THE TRENCH SIMULTANEOUSLY ON EACH SIDE OF THE PIPE ABOVE THE PIPE BEDDING ZONE (SPRINGLINE) FOR THE FULL WIDTH OF THE TRENCH IN LAYERS NOT EXCEEDING 8" IN LOOSE THICKNESS AND SHALL BE COMPACTED TO A MINIMUM OF 90%. CARE SHALL BE EXERCISED IN BACKFILLING THE "PIPE ZONE" TO AVOID DAMAGE TO THE PIPE. BACKFILLING SHALL BE CARRIED ON SIMULTANEOUSLY ON EACH SIDE OF THE PIPE TO ASSURE PROPER PROTECTION OF THE PIPE.
6. PROCEDURE ABOVE THE PIPE ZONE: FROM 12 INCHES ABOVE THE PIPE TO FINISHED GRADE THE BACKFILL SHALL BE PLACED IN THIN LIFTS AND COMPACTED USING APPROVED COMPACTION EQUIPMENT TO A MINIMUM DEGREE OF COMPACTION OF 90% (95% IN UPPER 12 INCHES BENEATH PAVED AREAS).
7. TRENCH BACKFILL SHALL BE DONE IN A CONTINUOUS OPERATION AND COMPLETED TO SUBGRADE. AREAS OF MINIMUM COVER SHALL BE PROTECTED.
8. EACH BACKFILL LAYER SHALL BE EVENLY SPREAD, PROPERLY MOISTENED AND COMPACTED TO THE SPECIFIED RELATIVE DENSITY. ANY DAMAGE TO THE PIPE AS A RESULT OF CONTRACTOR'S OPERATION SHALL BE REPAIRED AND/OR REPLACED AT THE CONTRACTOR'S EXPENSE.
9. NO MATERIAL GREATER THAN 3" IN ANY DIMENSION SHALL BE PLACED WITHIN ONE FOOT OF ANY PIPE, MANHOLE OR STRUCTURE.
10. MAXIMUM DENSITY SHALL BE DETERMINED IN ACCORDANCE WITH THE LATEST ASTM METHODOLOGY AND ALL BEDDING AND BACKFILL SHALL BE PLACED UNDER THE OBSERVATION OF THE SOILS ENGINEER.
11. THE GENERAL CONTRACTOR SHALL BE RESPONSIBLE TO SUPERVISE AND CERTIFY THAT PROPER COMPACTION HAS BEEN OBTAINED BY SUBCONTRACTORS.
12. THE GOVERNING AUTHORITY MAY REQUIRE THE CONTRACTOR TO UNCOVER ANY IMPROVEMENTS THAT HAVE BEEN COMPLETED WITHOUT PROPER INSPECTION AND/OR APPROVAL. IF THE INSTALLATION IS FOUND NOT TO MEET THE AUTHORITIES STANDARDS OR PREVIOUSLY APPROVED ALTERNATIVES SHOWN ON THE PLANS, THE CONTRACTOR MAY BE REQUIRED TO REMOVE AND REPLACE SUCH IMPROVEMENTS AT HIS/HER EXPENSE.

UNION SANITARY DISTRICT STANDARD SANITARY SEWER NOTES:

1. MANHOLE ENTRY IS PROHIBITED – DUE TO POTENTIAL HAZARDS, CONTRACTORS SHALL NOT ENTER USD MANHOLES IN THE COURSE OF THEIR WORK. AN ENCROACHMENT PERMIT THAT SPECIFICALLY ALLOWS ENTRY INTO IDENTIFIED MANHOLES MUST FIRST BE OBTAINED FROM UNION SANITARY DISTRICT (USD).
2. DISCHARGE OF STORM WATER/GROUNDWATER TO SANITARY SEWER PROHIBITED WITHOUT USD GROUNDWATER DISCHARGE PERMIT – STORM WATER, GROUNDWATER, RAIN WATER, STREET DRAINAGE, SUBSURFACE DRAINAGE OR YARD DRAINAGE SHALL NOT BE DISCHARGED TO A SEWER MANHOLE, MAIN OR SERVICE CONNECTION UNLESS SPECIFICALLY AUTHORIZED BY USD DISCHARGE PERMIT. USD MAY ALLOW THE DISCHARGE OF SUCH WATER IN TO ITS SYSTEM AT ITS SOLE DISCRETION AND ONLY WHEN USD DETERMINES THAT NO REASONABLE ALTERNATIVE METHOD OF DISPOSAL IS AVAILABLE.
3. ACCESS TO EXISTING USD MANHOLES MUST BE MAINTAINED – CONTRACTOR SHALL MAINTAIN ACCESS TO USD MANHOLES AT ALL TIMES. IF CONTRACTOR'S ACTIVITIES WILL LIMIT OR PREVENT USD MAINTENANCE PERSONNEL FROM ACCESSING A MANHOLE, THE USD INSPECTOR MUST IMMEDIATELY BE NOTIFIED. IF LIMITED OR NO ACCESS TO A USD MANHOLE WILL PERSIST FOR MORE THAN THREE (3) WORKING DAYS WRITTEN AUTHORIZATION MUST BE REQUESTED FROM USD.
4. HAZARD IDENTIFICATION – CONTRACTORS ARE HEREBY ADVISED THAT THEY MAY BE EXPOSED TO HAZARDOUS CONDITIONS WHEN INSTALLING OR MODIFYING SANITARY SEWER PIPELINES AND STRUCTURES. SOME OF THESE HAZARDS INCLUDE BUT ARE NOT LIMITED TO: EXPOSURES TO HAZARDOUS GASSES COMMONLY FOUND IN SEWER SYSTEMS SUCH AS HYDROGEN SULFIDE, CARBON DIOXIDE, METHANE, OXYGEN DEFICIENT ENVIRONMENTS, AND OTHER FLAMMABLE OR EXPLOSIVE GASSES; EXPOSURE TO SEWAGE WHICH MAY CONTAIN BACTERIOLOGICAL, CHEMICAL AND OTHER CONSTITUENTS HARMFUL TO HUMANS; AND EXPOSURE TO AREAS WHICH HAVE LIMITED OR RESTRICTED ACCESS AND EGRESS, WHICH MAY BE CONSIDERED PERMITTED CONFINED SPACES BY STATE AND FEDERAL OSHA REQUIREMENTS.
5. USA NOTIFICATION – AT LEAST TWO WORKING DAYS BEFORE EXCAVATING, CONTRACTOR SHALL CONTACT UNDERGROUND SERVICE ALERT (USA NORTH) AT 811 OR 1-800-642-2444.
6. COST OF INSTALLATION – THE PRIVATE OR PUBLIC SANITARY SEWER SYSTEM TO SERVE THE DEVELOPMENT SHALL BE DESIGNED AND INSTALLED AT DEVELOPER'S EXPENSE IN ACCORDANCE WITH THE LATEST REVISIONS OF THE USD STANDARD SPECIFICATIONS AND DETAILS.
7. USD JURISDICTION – USD WILL PERMIT AND INSPECT ALL MAIN AND BUILDING SEWER INSTALLATIONS AND BEDDING IN ALL AREAS OUTSIDE OF THE BUILDING FOOTPRINT AT DEVELOPER'S EXPENSE.
8. INDEMNIFICATION – IN CONSIDERATION OF ISSUANCE OF THE PERMIT, DEVELOPER, OWNER OR CONTRACTOR SEEKING SUCH PERMIT HEREBY AGREES TO HOLD HARMLESS AND INDEMNIFY USD AND EMPLOYEES AGAINST ANY AND ALL CLAIMS, DEMANDS, CAUSE OF ACTION, COSTS INCLUDING ATTORNEY'S FEES, EXPENSES INCLUDING CONSULTANT'S FEES, OBLIGATIONS, LIABILITIES, DAMAGES, AND JUDGMENTS ARISING FROM ANY AND ALL BODILY INJURIES INCLUDING DEATH OF AN EMPLOYEE OF DEVELOPER, OWNER OR CONTRACTOR OR ANY OTHER PERSON, AND ANY AND ALL DAMAGES TO PROPERTY INCLUDING LOSS OF USE THAT RESULTS IN ANY WAY FROM THE PERMIT ISSUED BY USD.
9. REMOVAL, ABANDONMENT, AND CAPPING – ANY EXISTING SANITARY SEWER MAINS, LATERALS, MANHOLES AND APPURTENANCES, INCLUDING GREASE TRAPS/INTERCEPTORS/SEPARATORS, WITHIN THE SITE TO BE REMOVED, ABANDONED, OR CAPPED (TO BE REUSED OR NOT) SHALL BE CLEARLY NOTED ON THE PLANS AND ALL WORK PERFORMED IN ACCORDANCE WITH USD SPECIFICATIONS AND PERMIT CONDITIONS. FOR WORK ON SEWER LATERALS, A SEPARATE SEWER LATERAL DEMOLITION/CAPPING PERMIT MUST BE OBTAINED FROM USD PRIOR TO THE START OF ANY DEMOLITION OR GRADING OPERATIONS AND USD SHALL INSPECT THE WORK. USD WILL NOT ISSUE A SEWER CONSTRUCTION PERMIT UNTIL SUCH PERMIT IS CLOSED AND THE WORK ACCEPTED.
10. SEWER CONSTRUCTION PERMIT & INSPECTION REQUIRED – A SEWER CONSTRUCTION PERMIT MUST BE OBTAINED FROM USD PRIOR TO ANY EXCAVATION TO CONSTRUCT A SANITARY SEWER LATERAL, MAIN, MANHOLE, CLEANOUT OR APPURTENANCE AT ANY LOCATION TWO (2) FEET OR MORE OUTSIDE OF A BUILDING. ALL SANITARY SEWER CONSTRUCTION OUTSIDE OF A BUILDING MUST BE INSPECTED BY USD AND COMPLY WITH THE 2017 USD STANDARD SPECIFICATIONS AND DETAILS.
11. NOTIFICATION FOR INSPECTION – USD SHALL BE NOTIFIED AT LEAST 48 HOURS PRIOR TO START OF ANY SEWER CONSTRUCTION AND A REQUEST MADE FOR INSPECTION OF WORK (CALL YOUR ASSIGNED USD INSPECTOR OR 510-477-7500). THIS NOTIFICATION APPLIES NOT ONLY TO STARTING WORK, BUT ALSO TO RESTARTING WORK WHICH HAS BEEN TEMPORARILY HALTED.
12. WORK BY USD FORCES – ALL WORK TO BE DONE BY USD SHALL BE DONE AT DEVELOPER'S EXPENSE UNLESS OTHERWISE SPECIFIED. CONTRACTOR SHALL CALL USD TO SCHEDULE THIS WORK A MINIMUM OF 48 HOURS IN ADVANCE (CALL YOUR USD INSPECTOR OR 510-477-7500).
13. ACCEPTABLE PIPE MATERIALS – SANITARY SEWER MAINS AND LATERALS SHALL BE LIMITED TO THE FOLLOWING PIPE MATERIALS (SUBJECT TO MINIMUM COVER REQUIREMENTS) UNLESS OTHERWISE SPECIFIED (SEE 2017 USD STANDARD SPECIFICATIONS SECTION 5 FOR ADDITIONAL REQUIREMENTS, HIGHER GRADE/PRESSURE CLASS MATERIALS MAY BE SUBSTITUTED):
    - DUCTILE IRON PIPE (DIP), ANSI/AWWA C151/A21.51
    - ABS SOLID WALL PIPE, SCH 40/SDR 26, ASTM D-2661 (LATERALS ONLY)
    - PVC SOLID WALL PIPE, SDR 26/PS-115, ASTM D-3034/F-679
    - PVC PRESSURE PIPE, AWWA C-900, CLASS 150
    - HDPE, AWWA C906, ASTM D-3035 (SUBJECT TO PRIOR APPROVAL BY USD)
14. SEWER SURVEY CUT SHEETS – CUT SHEETS (STAKEOUT, GRADE SHEETS, ETC.) ARE REQUIRED BEFORE THE START OF SEWER CONSTRUCTION INVOLVING A PIPELINE 100 FEET LONG OR MORE, A PIPELINE WITH A SLOPE OF LESS THAN ONE PERCENT (<1%), OR WHEN REQUIRED BY USD. A REGISTERED CIVIL ENGINEER OR LAND SURVEYOR ENGAGED BY DEVELOPER WILL BE RESPONSIBLE FOR SETTING STAKES AND PREPARING CUT SHEETS ON REQUIRED USD FORM. CUT SHEETS WILL BE CHECKED BY USD, AND ONE (1) APPROVED COPY WILL BE RETURNED FOR USE IN CONSTRUCTION. STAKES MUST NOT BE MARKED WITH CUTS PRIOR TO USD CUT SHEET APPROVAL. WHERE A CONNECTION IS TO BE MADE TO AN EXISTING SEWER OR STRUCTURE, SAID EXISTING SEWER OR STRUCTURE SHALL BE UNCOVERED AND CHECKED FOR LOCATION AND ELEVATION PRIOR TO SUBMITTING CUT SHEETS. ANY DISCREPANCY BETWEEN THE PLANS AND FIELD INFORMATION SHALL BE REPORTED IMMEDIATELY TO THE USD INSPECTOR.
15. SEWER LATERAL (BUILDING SEWER) REQUIREMENTS – ALL SANITARY SEWER LATERALS SHALL BE INSTALLED AS SHOWN ON THE PLANS.
    - THE LOCATION OF ALL SEWER LATERALS SHALL BE MARKED BY DEVELOPER'S ENGINEER.
    - ALL BUILDING LATERALS SHALL BE A MINIMUM FOUR (4) INCHES DIAMETER AND HAVE A MINIMUM SLOPE OF TWO PERCENT (2%), EXCEPT AS NOTED ON THE APPROVED PLANS.
    - CONTRACTOR SHALL PLACE AN "S" MARKING ON THE CURB FACE AT EACH LATERAL LOCATION.
    - ALL SEWER CLEANOUTS SHALL BE THE SAME SIZE AS THE LATERAL, INSTALLED IN AN APPROVED CLEANOUT BOX, AND SET FLUSH WITH THE FINISH GRADE.
16. CONNECTION TO BUILDING DRAIN (PLUMBING KICK-OUT) – AFTER A PERMIT FOR SEWER CONSTRUCTION HAS BEEN ISSUED, BUILDING SEWERS MAY BE CONSTRUCTED UP TO A POINT FIVE (5) FEET FROM THE BUILDING WALL. ACTUAL CONNECTION OF THE BUILDING SEWER TO THE BUILDING DRAIN WILL NOT BE PERMITTED UNTIL THE MAIN SEWER OR BUILDING SEWER TO WHICH IT CONNECTS HAS BEEN TESTED IN ACCORDANCE WITH USD'S SPECIFICATIONS AND ACCEPTED BY USD. DO NOT EXTEND BUILDING PLUMBING MORE THAN A FEW FEET BEYOND BUILDING WALL. THE FINAL CONNECTION MUST BE DONE BY A SEWER CONTRACTOR WITH A USD SEWER CONNECTION PERMIT THAT SPECIFIES THE BUILDING(S) BEING CONNECTED TO THE SEWER.
17. CONNECTION TO EXISTING SEWERS – WHERE A BUILDING SEWER/LATERAL CONNECTION IS TO BE MADE TO A MAIN SEWER, THE INVERT ELEVATION OF THE LATERAL SHALL BE EQUAL TO THE INSIDE TOP ELEVATION OF THE MAIN SEWER. FOUR (4) INCH LATERAL TO MAIN EIGHT (8) INCHES OR LARGER, AND SIX (6) INCH LATERAL TO MAIN TEN (10) INCHES OR LARGER CONNECTIONS SHALL BE MADE WITH A WYE OR TAPPED WITH A "TAP-TITE" FITTING INSTALLED BY TAP TITE CO. (OR PRE-APPROVED EQUAL). FOUR (4) INCH LATERAL TO SIX (6) INCH MAIN AND SIX (6) INCH LATERAL TO EIGHT (8) INCH MAIN CONNECTIONS SHALL BE MADE WITH A WYE. ALL WYES AND TAPS SHALL BE INSTALLED AT 22.5° TO 45° FROM HORIZONTAL (SEE USD STANDARD DETAIL NO. 14A). ONLY USD PERSONNEL SHALL MAKE CONNECTIONS TO LIVE SEWER MAINS UNLESS OTHERWISE NOTED ON THE PLANS OR SPECIFICALLY AUTHORIZED BY THE USD INSPECTOR. CONNECTION TO A TRUNK MAIN (18" AND LARGER) REQUIRES A TRUNK MANHOLE. WHERE CONNECTION IS TO BE MADE TO A TERMINAL/DEAD-END MANHOLE, THE INSIDE TOP ELEVATIONS OF ALL THE PIPES IN THE MANHOLE BASE SHALL BE EQUAL (SEE USD STANDARD DETAIL NO. 4).
18. OVERFLOW/BACKFLOW PREVENTION DEVICE – CONTRACTOR SHALL INSTALL AN APPROVED OVERFLOW/BACKFLOW PREVENTION DEVICE WHERE THE FLOOR ELEVATION IS SIX (6) INCHES OR LESS ABOVE THE NEAREST UPSTREAM MANHOLE RIM ELEVATION.
19. ONLY THE APPROXIMATE LOCATIONS OF THE EXISTING SANITARY SEWERS ARE SHOWN. THE CONTRACTOR SHALL EXPOSE EXISTING SEWER LINES TO VERIFY THE EXACT LOCATIONS AND INVERTS PRIOR TO ANY CONSTRUCTION. NOTIFY THE PROJECT ENGINEER IMMEDIATELY IF SAID LOCATIONS ARE DIFFERENT FROM THAT SHOWN ON THESE PLANS.
20. SANITARY SEWER TESTING: UNION SANITARY DISTRICT SHALL OBSERVE ALL REQUIRED TESTING OF THE SANITARY SEWER SYSTEM. THE CONTRACTOR SHALL NOTIFY THE SEWER DISTRICT A MINIMUM OF TWO (2) WORKING DAYS PRIOR TO SCHEDULING ANY AIR TEST, TV INSPECTION, OR BALL AND FLUSH.

WASTE HANDLING PLAN:

1. THE APPLICANT MUST SUBMIT A FREMONT WASTE HANDLING PLAN ONLINE AT WWW.FREMONT.WASTETRACKING.COM PRIOR TO PERMIT ISSUE.
2. GARBAGE AND RECYCLING REQUIREMENTS ARE EXPLAINED IN THE FREMONT WASTE HANDLING GUIDELINES DOCUMENT: WWW.FREMONT.GOV/WHG. APPLICANT WILL BE RESPONSIBLE FOR INCORPORATING THESE GUIDELINES INTO THE DESIGN OF THE PROJECT.

Alameda County
Dept. of Environmental Health
Approved By: T. Tran

ams associates, inc.

PLANNING
ENGINEERING
SURVEYING

801 Ygnacio Valley road, Ste. 220
Walnut Creek, CA 94596
Office: (925) 943 - 2777
Fax: (925) 943 - 2778

THIS DOCUMENT AND THE IDEAS AND DESIGN INCORPORATED HEREIN AS AN INSTRUMENT OF PROFESSIONAL SERVICES IS THE PROPERTY OF ams ASSOCIATES, INCORPORATED AND IS NOT TO BE USED IN WHOLE OR IN PART FOR ANY OTHER PROJECT WITHOUT THE WRITTEN AUTHORIZATION OF ams ASSOCIATES, INCORPORATED.

SEAL

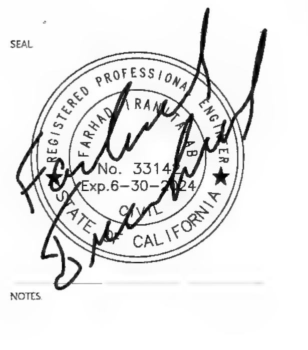

NOTES

PROJECT
SALTALK FREMONT KITCHEN TENANT IMPROVEMENT

42550 ALBRAE ST.,
FREMONT, CA 94538

CLIENT

SALTALK, INC.
3334 VICTOR CT.,
SANTA CLARA, CA 95054

SUBMITTALS/ REVISIONS

1	HEALTH/USD SUBMITTAL	04/01/2022
2	2ND BLD. SUBMITTAL	07/22/2022
3	3RD USD SUBMITTAL	09/08/2022

PROJECT NO	22-2628
SCALE	N.T.S.
DATE	2/10/2022
DRAWN BY	TY / AS
CHECKED BY	AS

SHEET TITLE
GENERAL NOTES

SHEET NO
C-2.1

C:\USERS\TIANYU\AMS ASSOCIATES\AMS ASSOCIATES - DOCUMENTS\PRODUCTION\22-2628 CENTRAL KITCHEN, FREMONT\LATEST DATE DIRECTORY\22-06-29 ENTITLEMENT\2628NOTE.DWG

CONSTRUCTION NOTES:

1. INSTALL SANITARY SEWER CLEANOUT PER UNION SANITARY SEWER DISTRICT'S STANDARDS AND SPECIFICATIONS, DETAIL # 14A AND 15.
2. INSTALL 5000 GALLON SANITARY SEWER AT GREASE INTERCEPTOR. REFER TO THE PLUMBING PLAN FOR ADDITIONAL INFORMATION.
3. INSTALL 750 GALLON INTERCEPTOR FOR THE TRASH ENCLOSURE.
4. INSTALL AREA DRAIN.
5. INSTALL 5,000 GALLON GREASE INTERCEPTOR PER UNION SANITARY SEWER DISTRICT'S DETAIL #21 AND 23.
6. THE TRASH ENCLOSURE APRON IS TO SLOPE AWAY FROM THE PAD.
7. THE TRASH ENCLOSURE SHALL HAVE A ROOF AND PLACED SO THAT STORMWATER CANNOT ENTER.
8. SAWCUT (12" MINIMUM), REMOVE AND REPLACE THE EXISTING PAVEMENT.
9. INSTALL ADA RAMP PER THE CITY'S STANDARDS AND SPECIFICATIONS.
10. INSTALL CONCRETE SIDEWALK.
11. INSTALL ADDITIONAL STEP IN FRONT OF THE ELECTRICAL ROOM. (IF REQUIRES).
12. REMOVE THE EXISTING PAVEMENT AND INSTALL CONCRETE PAVEMENT IN FRONT OF THE TRASH ENCLOSURE. REFER TO THE ARCHITECTURAL AND STRUCTURAL PLANS.

Alameda County
Dept. of Environmental Health
Approved By: T. Tran

GRAPHIC SCALE
1"=10'

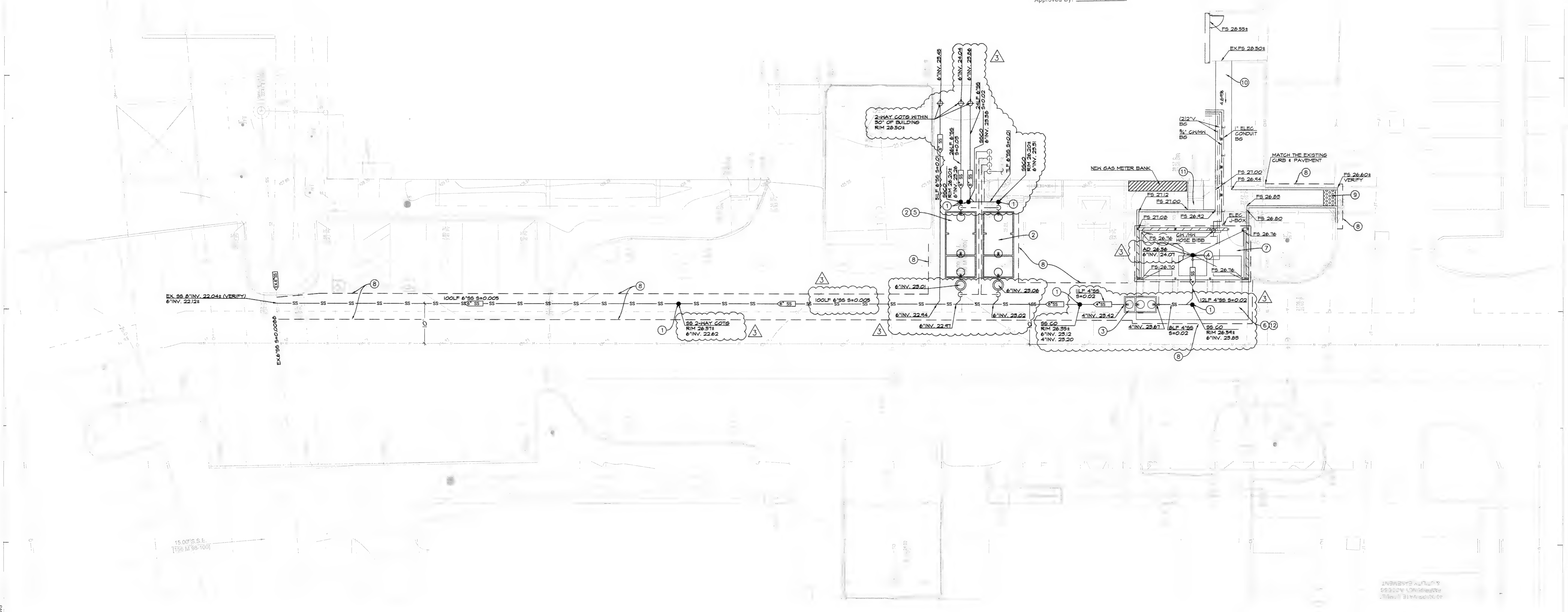

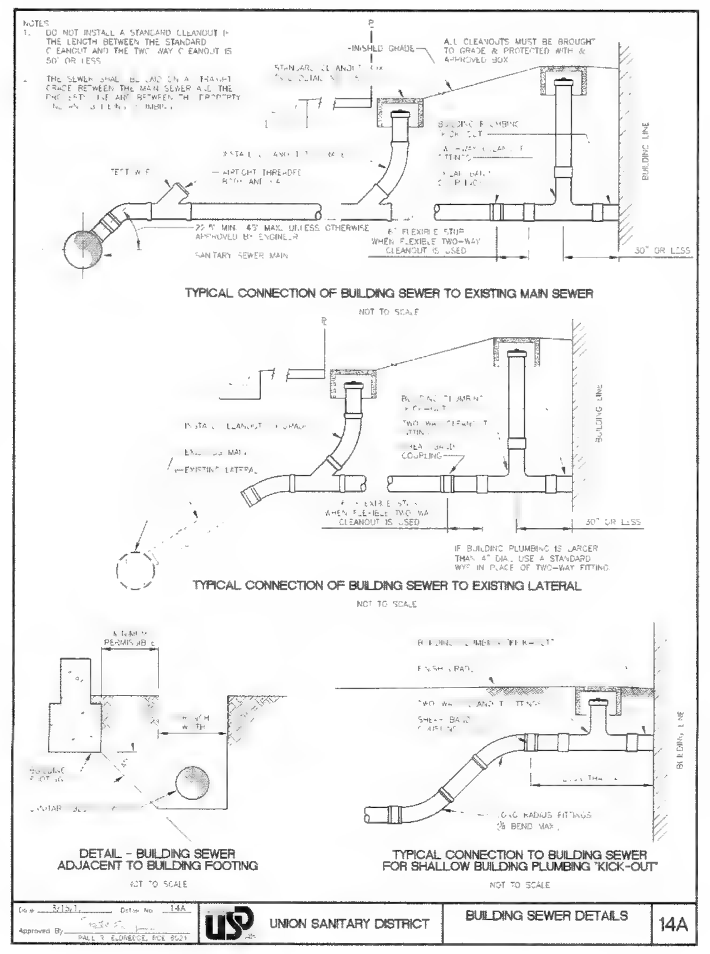

1 BUILDING SEWER DETAILS
NOT TO SCALE

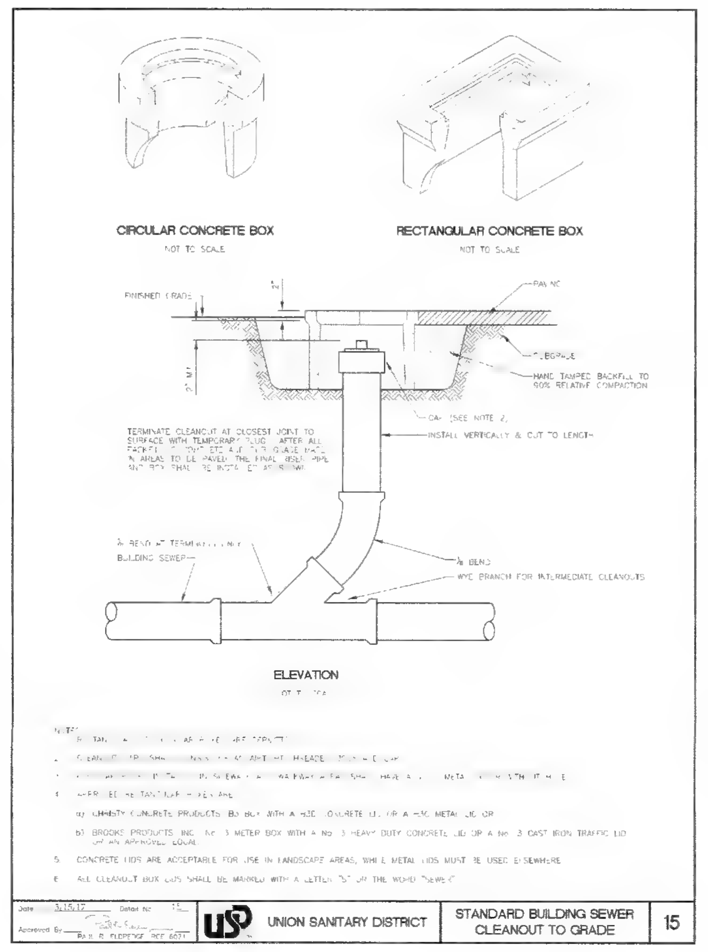

2 SEWER CLEANOUT
NOT TO SCALE

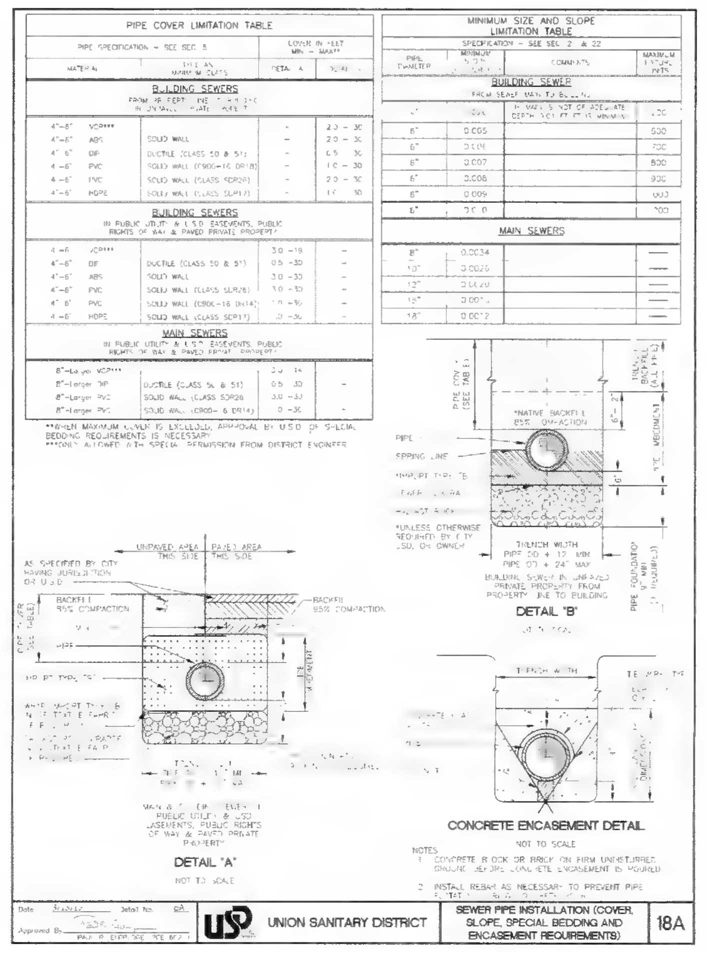

3 SEWER PIPE INSTALLATION
NOT TO SCALE

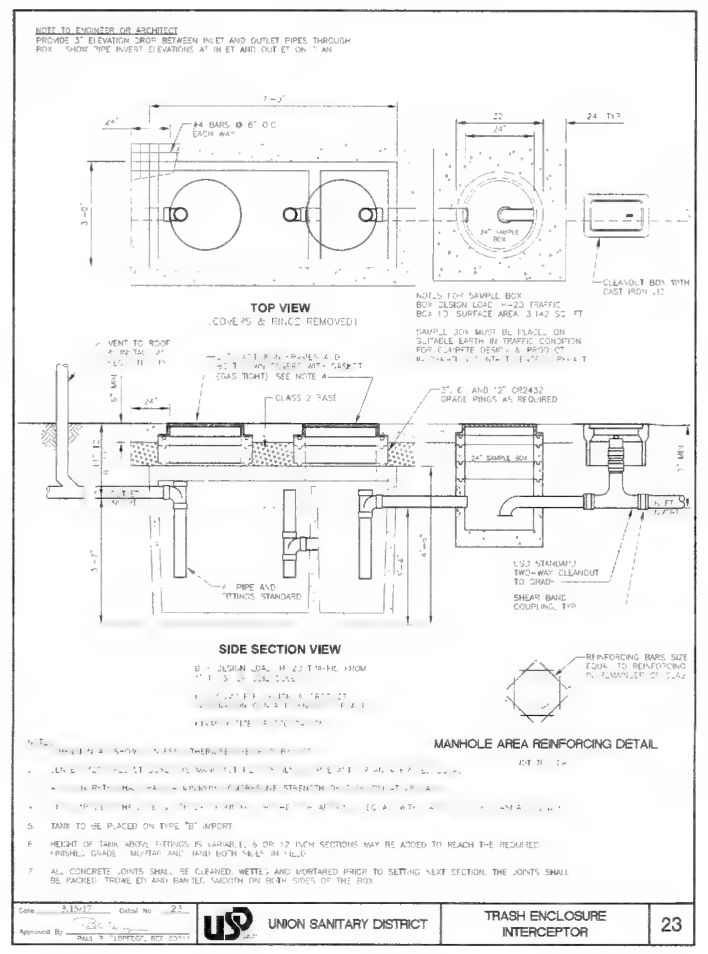

4 TRASH ENCLOSURE INTERCEPTOR
NOT TO SCALE

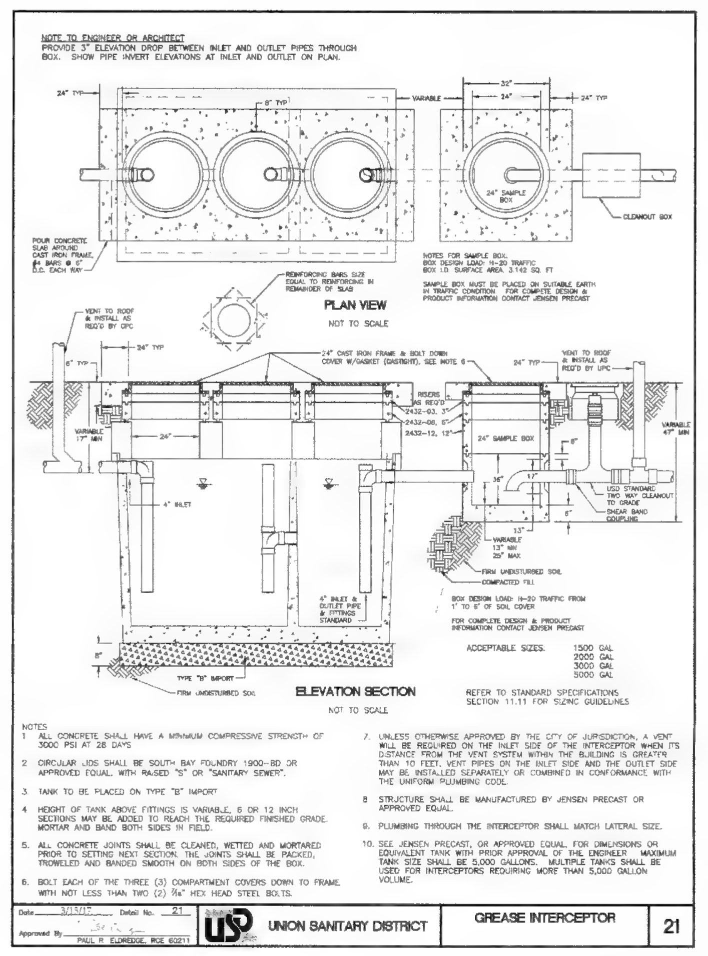

5 5000 GALLON GREASE INTERCEPTOR
NOT TO SCALE

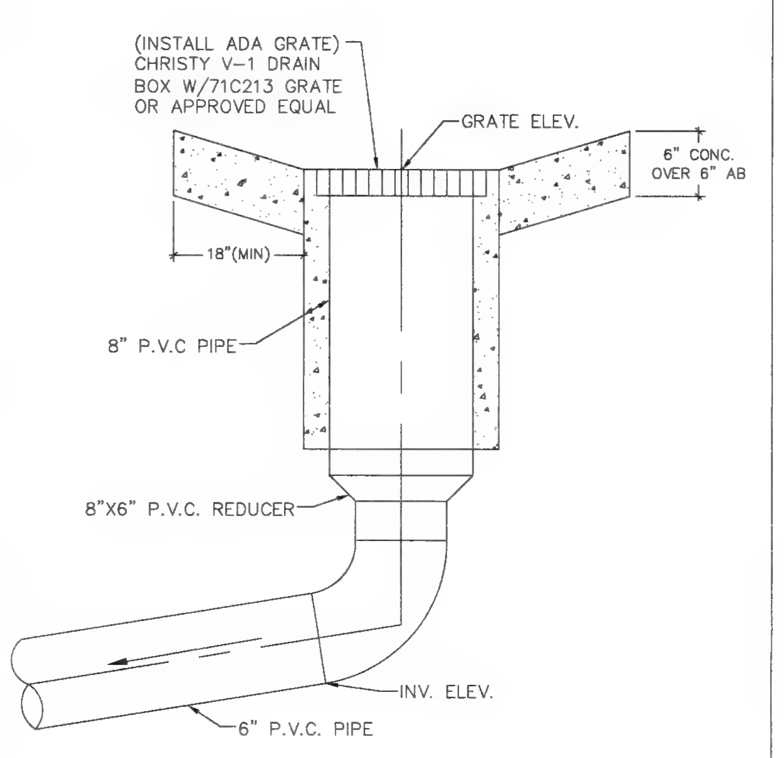

NOTE: FOR PAVEMENT SECTION CONFIRM WITH WITH GEOTECH ENGINEER

6 AREA DRAIN
NOT TO SCALE

ams associates, inc.
PLANNING
ENGINEERING
SURVEYING

801 Ygnacio Valley road, Ste. 220
Walnut Creek, CA 94596
Office: (925) 943 - 2777
Fax: (925) 943 - 2778

THIS DOCUMENT AND THE IDEAS AND DESIGN INCORPORATED HEREIN AS AN INSTRUMENT OF PROFESSIONAL SERVICES IS THE PROPERTY OF ams ASSOCIATES, INCORPORATED AND IS NOT TO BE USED IN WHOLE OR IN PART FOR ANY OTHER PROJECT WITHOUT THE WRITTEN AUTHORIZATION OF ams ASSOCIATES, INCORPORATED

PROJECT
SALTALK FREMONT KITCHEN TENANT IMPROVEMENT

42550 ALBRAE ST.,
FREMONT, CA 94538

CLIENT
SALTALK, INC.
3334 VICTOR CT.,
SANTA CLARA, CA 95054

SUBMITTALS/ REVISIONS

1	HEALTH/USD SUBMITTAL	04/01/2022
2	2ND BLD SUBMITTAL	07/22/2022
3	3RD USD SUBMITTAL	09/08/2022

PROJECT NO	22-2628
SCALE	1" = 10'
DATE	2/10/2022
DRAWN BY	TY / AS
CHECKED BY	AS

SHEET TITLE
GRADING AND UTILITY PLAN

SHEET NO.
C-3.1

GENERAL NOTES

1. CONTRACTOR SHALL VISIT JOB SITE TO VERIFY FIELD CONDITION AGAINST CONSTRUCTION PLAN AND SPECIFICATION, IDENTIFY POSSIBLE CONFLICT AND DISCREPANCY BETWEEN PLAN AND SITE CONDITION, AND BRING TO OWNER'S AND ENGINEER'S ATTENTION PRIOR TO ENTER CONTRACT.
2. SUBMISSION OF A CONTRACT SHALL BE CONSTRUCTED AS EVIDENCE THAT A CAREFUL EXAMINATION OF THE PORTION OF THE EXISTING BUILDING, EQUIPMENT, SYSTEMS, SITE CONSTRAINTS, ETC, WHICH MAY AFFECT THE ASSOCIATED WORK SCOPE UNDER THIS CONTRACT, AND THE ACCESS TO SUCH SPACES, HAVE ALL BEEN MADE AND THAT THE CONTRACTOR IS FULL AWARE OF WITH EXISTING CONDITIONS AND DIFFICULTIES THAT WILL AFFECT THE EXECUTION OF WORK. LATER CLAIMS SHALL NOT BE MADE FOR LABOR, EQUIPMENT, OR MATERIAL REQUIRED BECAUSE OF DIFFICULTIES ENCOUNTERED WHICH COULD HAVE BEEN FORESEEN DURING SUCH EXAMINATIONS.
3. BY ENTERING CONTACT OF CONSTRUCTION, WHETHER IT IS SHOWN OR NOT SHOWN ON THIS PLAN, CONTRACTOR IS FULLY RESPONSIBLE TO COMPLETE WORK WITH MEETING ALL APPLICABLE CODES, LAWS, AND REGULATIONS GOVERNING ANY PORTION OF THE WORK SCOPE ON PLAN AND SPECIFICATIONS. PRIOR TO SUBMITTING A PROPOSAL, CONTRACTOR SHALL FULLY UNDERSTAND AND COVER ALL COSTS WORK SCOPE AND MATERIALS TO MEET ALL APPLICABLE CODES, LAWS, AND REGULATIONS. ANY WORK DONE BY THE CONTRACTOR CAUSING SUCH VIOLATION SHALL BE CORRECTED BY THE CONTRACTOR.
4. CONTRACTOR IS TO REVIEW PLANS OF OTHER DISCIPLINES AND COORDINATE WITH THE WORK OF OTHER TRADES PRIOR TO INSTALLATION TO AVOID ANY CONFLICT. NO COST SHALL BE INCURRED ON CONSTRUCTABILITY ISSUE DUE TO LACK OF COORDINATION.
5. ALL WORK SHOWN ON PLAN ARE DIAGRAMMATIC AND INDICATE GENERAL ARRANGEMENT OF SYSTEM AND WORK. INFORMATION ON PLAN SHALL NOT BE USED TO DETERMINE EXACT LOCATION OF INSTALLATION. WHERE INSTALLATION REQUIRES EXACT MEASUREMENTS AND COORDINATION WITH WORKS OF OTHER TRADE, CONTRACTOR SHALL PREFORM ALL REQUIRED WORK AND PROVIDE SHOP DRAWINGS FOR REVIEW AND APPROVAL PRIOR TO INSTALLATION. THE CONTACTOR SHALL ALLOW IN HIS PRICE FOR WORK DONE WITH DEVIATIONS IN LOCATION AND METHOD TO AVOID OBSTRUCTIONS AND CONFLICT OF OTHER TRADES AND EXISTING UTILIZES OF BASE BUILDING.
6. CONTRACTOR SHALL SUBMIT SPECIFICATIONS OF ALL THE MATERIALS AND EQUIPMENT TO BE USED ALONG WITH SHOP DRAWING WHERE REQUIRES IN SPECIFICATION FOR APPROVAL PRIOR TO ORDER.
7. ALL NEW WORK CONNECTING TO EXISTING BASE BUILDING UTILIITIES SHALL BE FULLY COORDINATED WITH REPRESENTATIVE OF OWNERSHIP TO RESULT MINIMUM INTERFERENCE TO EXISTING FACILITIES. TEMPORARY UTILITY SHUT-DOWN TO EXISTING BUILDING SERVICE SHALL BE APPROVED BY OWNERSHIP WITH WRITTEN CONSENT OF BUILDING OWNER AND SHALL INCURRED NO ADDITIONAL CHARGES. FOLLOW ALL REQUIRED CLEANING PROCEDURES AND CONNECTION REQUIREMENT PRIOR TO ESTABLISH SERVICE AFTER CONNECTION. WHERE CONTINUOUS OPERATION OF EXISTING BUILDING SERVICES ARE REQUIRED, PROVIDE WORKMANSHIP AND MATERIAL FOR ISOLATION BETWEEN BUILDING AND PROJECT SPACE, RESTORE BUILDING SERVICE IMMEDIATELY WITH MAINTAINING ORIGINAL OPERATING CONDITION.
8. CONTRACTOR SHALL STORE ALL EQUIPMENT AND MATERIAL IN A ORGANIZED AND CLEANED SPACE AT ALL TIME TO PREVENT FROM DAMAGING AND DETERIORATION PRIOR TO INSTALLATION. CONTRACTOR SHALL KEEP ALL PART OF THE CONSTRUCTION AREA AND ASSOCIATED ACCESSES CLEAN AND FREE OF DEBRIS RESULTING FROM EXECUTION OF WORK.
9. ALL LOCATION OF EXISTING UTILITIES ARE SHOWN BASED ON RECORD DRAWING OR INFORMATION PROVIDED BY SURVEYOR OR BASE BUILDING. CONTRACTOR IS RESPONSIBLE TO VERIFY EXACT LOCATION, SIZE, CONDITION, MATERIAL, AND INVERT AS APPLICABLE TO CONFIRM CONSTRUCTABILITY PRIOR TO INSTALL.
10. ALL EQUIPMENT INSTALLED SHALL BE PROVIDED WITH ACCESS AND CLEARANCES MEETING CODE REQUIREMENT AND REQUIREMENTS OF FACTORY INSTALLATION GUIDELINES FOR MAINTENANCE. WHERE ACCESS SHALL BE PROVIDED FOR OPERATION, INSPECTION, TESTING, BALANCING, MAINTENANCE, OR CODE COMPLIANCE, WHETHER SHOWN ON NOT SHOWN ON ARCHITECTURAL PLAN, CONTRACTOR SHALL COORDINATE WITH GENERAL CONTRACTOR FOR PROVISION OF SUCH ACCESS.
11. ANY INVASIVE CONSTRUCTION, SUCH AS CORE-DRILLING, CUTTING, BORING, OPENING, TO EXISTING BUILDING FLOOR OR WALL, STRUCTURAL OR NON-STRUCTURAL RELATED, SHALL BE SUBJECTED TO WRITTEN APPROVAL BY REPRESENTATIVE OR OWNERSHIP OF BASE BUILDING. WHERE REQUIRED BY OWNER, PROVIDE SHOP DRAWING WITH DETAILED MEANS AND METHODS WITH DIMENSIONAL RESULTS OF X-RAY SCANNING AS EVIDENCE TO ENSURE NO DAMAGE WILL CAUSE TO EXISTING BUILDING STRUCTURE OR UTILITY PRIOR TO PERFORM SUCH WORK. NO CONSTRUCTION SHALL BE DONE IN RESULTING OF ANY DAMAGING OR DERATING OF BUILDING STRUCTURE INTEGRITY AND UTILITY SERVICEABILITY.
12. ANY OPENING MADE TO EXISTING BUILDING SHALL BE SUPPORTED, PATCHED, AND SEALED TO MEET ALL SPECIFICATION OF ORIGINAL CONSTRUCTION. ALL PENETRATION TO RATED ASSEMBLY SHALL BE PROTECTED BY UL LISTED FIRM AND/OR SMOKE PROTECTION ASSEMBLY TO MAINTAIN ORIGINAL ASSEMBLY FIRE AND SMOKE RATING.
13. CONTRACTOR SHALL PROVIDE INSURANCE POLICY IN ACCORDANCE TO BUILDING OWNER'S AND PROJECT OWNER'S REQUIREMENTS INCLUDING A HOLD HARMLESS CAUSE FOR OWNER AND ENGINEER ON RECORD.
14. FOR THE USE OF EQUIPMENT OR MATERIAL THAT ARE DIFFERENT FROM SCHEDULES OR SPECIFICATIONS, CONTRACTOR IS RESPONSIBLE TO PROVIDE, INCLUDING BUT NOT LIMITED TO, SPECIFICATION, CALCULATION, ENGINEERING, COST DIFFERENCE, ETC. FOR APPROVAL OF EQUAL AND OWNER'S APPROVAL.
15. ALL WORK DONE SHALL BE GUARANTEED FOR A PERIOD OF TWO YEARS FROM DATE OF ACCEPTANCE OF WORK.
16. PRIOR TO FINAL ACCEPTANCE BY OWNER OR REPRESENTATIVE OF OWNER, CONTRACTOR IS RESPONSIBLE TO TEST, ADJUST, AND BALANCE ALL ASSOCIATED EQUIPMENT AND SYSTEM WITHIN SCOPE WITH PROVISIONS OF REPORTS WHERE REQUIRED IN SPECIFICATIONS TO DEMONSTRATE THAT ALL REQUIREMENTS OF PLANS AND SPECIFICATIONS ARE FULLY MET AND ALL APPLICABLE CODES, LAWS, AND REGULATIONS ARE FULLY COMPLIED.

SCOPE OF WORK

1. ALL WORK SHALL BE IN ACCORDANCE WITH ALL LOCAL, STATE AND FEDERAL CODES, LAWS AND REGULATIONS.
2. ALL NEW DUCT SHALL BE SUPPORTED PER THE MINIMUM REQUIREMENT OF LATEST SMACMA GUIDELINE, AND SHALL BE BRACED AND GUYED TO PREVENT LATERAL OR HORIZONTAL SWING; THE USE OF SEISMIC RESTRAINT GUIDELINES PER SMACNA IS ALSO APPLICABLE (604.2 and 604.5). FASTEN ALL DUCT WORK JOINTS AND SEAMS WITH SHEET METAL SCREW AND CAULK AIR TIGHT TO AVOID AIR STREAK.
3. CONTRACTOR IS DIRECTED TO VISIT SITE AND BE FULLY COGNIZANT OF ALL CONDITIONS PRIOR TO PROPOSAL. VERIFY EXACT LOCATION, ELEVATIONS, SIZES AND CONDITIONS OF EXISTING UTILITIES, DUCTS AND PIPING ASSOCIATED WITH THE PROJECT ANY EXTRA EXPENSE DUE TO FAILURE TO MAKE SUCH EXAMINATION. SHALL NOT BE MADE. WHERE CHANGES IN THE EXISTING WORK ARE NECESSARY TO PERMIT THE INSTALLATION OF NEW WORK, THEY SHALL BE MADE AT NO ADDITIONAL COST TO THE OWNER.
4. CONTRACTOR SHALL OBTAIN AND PAY FOR ALL REQUIRED UTILITY SERVICES, INSPECTIONS AND PERMITS.
5. ALL MECHANICAL WORK SHALL BE CONCEALED, UNLESS OTHERWISE NOTED.
6. CLEAN THE PREMISES ON A DAILY BASIS TO LEAVE WORK AREA IN AN UNCLUTTERED CONDITION.
7. INSTALL THE ENTIRE MECHANICAL SYSTEM TO ELIMINATE ANY OBJECTIONABLE VIBRATION AND NOISE.
8. NOTIFY OWNER'S REPRESENTATIVE IMMEDIATELY IF A DISCREPANCY BETWEEN THE DRAWING AND THE ACTUAL SITE CONDITION OCCURS. STOP THE WORK THAT IS AFFECTED AND OBTAIN INSTRUCTION FROM THE OWNER'S REPRESENTATIVE BEFORE THE WORK CAN BE RESTARTED.
9. THE DRAWING INDICATES THE GENERAL ARRANGEMENT AND LOCATION OF PIPING, DUCTWORK, AND EQUIPMENT. MAKE DEVIATIONS SUCH AS OFFSETS IN DUCTS AND PIPES THAT ARE NECESSARY TO MEET SITE CONDITIONS AND TO COORDINATE WORK WITH OTHER TRADES. ALL DEVIATIONS TO THE CONTRACT DOCUMENT, WHETHER SHOWN OR NOT, SHALL BE THE RESPONSIBILITY OF THE CONTRACTOR AND SHALL BE MADE AT NO EXTRA EXPENSE TO THE OWNER.
10. OBTAIN AND FOLLOW MANUFACTURER S DIRECTIONS WHEN INSTALLING NEW EQUIPMENT. SUBMIT OPERATING AND MAINTENANCE MANUALS.
11. COORDINATE ALL CUTTING AND PATCHING WITH GENERAL CONTRACTOR, INDIVIDUAL SUB-CONTRACTOR SHALL BE RESPONSIBLE FOR ALL CUTTING AND PATCHING TO THEIR WORK.
12. COORDINATE ALL WORK WITH ARCHITECTURAL, ELECTRICAL AND STRUCTURAL, AND PLUMBING DRAWINGS, INSTALL ALL WORK TO CLEAR NEW AND EXISTING ARCHITECTURAL AND STRUCTURAL MEMBERS.
13. FURNISH AND INSTALL COMPLETE ALL MATERIALS, EQUIPMENT AND LABOR AS SHOWN AND AS NECESSARY FOR COMPLETE WORKABLE SYSTEM.
14. CONTRACTOR SHALL GUARANTEE THAT THE WORK DONE UNDER THIS SPECIFICATION WILL BE FREE FROM FAULTY MATERIALS OR WORKMANSHIP AND HEREBY AGREES, UPON RECEIVING NOTIFICATION FROM THE OWNER, AND TO ITS ENTIRE SATISFACTION, ALL DEFECTS, DAMAGES OR IMPERFECTIONS APPEARING IN SAID WORK WITHIN A PERIOD OF ONE (1) YEAR FROM DATE OF FILING NOTICE OF COMPLETIONS.

BIMcloud: COAR-CONFERENCE - BIMcloud Basic for ARCHICAD 25/202201-Fremont-Ghost Kitchen Thursday, February 10, 2022 1:47 PM .

HVAC GENERAL NOTES CONT.

15. ALL SUPPLY AIR DUCTWORK WITHIN UN-CONDITIONAL SPACE SHALL BE EXTERNALLY OR INTERNALLY INSULATED WITH MINIMUM R-8 INSULATION.
16. RESTORE ALL DAMAGE AND LEAVE PREMISES IN CLEAN CONDITION WHEN FINISHED WITH WORK.
17. PROVIDE TO THE OWNER TWO SETS OF AS-BUILT DRAWINGS AND TWO BOUND SETS OF ALL OPERATING MANUALS, DIAGRAMS SERVICE CONTRACTS, GUARANTEES, ETC.
18. TEST AND BALANCE ALL EQUIPMENT AND DEVICES TO PERFORM AND DELIVER SPECIFIED QUANTITIES ON THE DRAWING. AIR BALANCING SHALL BE PERFORMED BY 3RD PARTY. SUBMIT 4 SET OF AIR BALANCE REPORT TO THE ENGINEER PRIOR FINAL.
19. THE MATERIAL OF THE DUCTS SHALL BE AS FOLLOWING; a) RECTANGULAR DUCTS AND ANY EXPOSED DUCTS : GALVANIZED SHEET METAL WITH GAUGE PER LATEST SMACNA STANDARD. b) ROUND DUCTS IN CEILING SPACE : GALVANIZED SHEET METAL WITH GAUGE PER LATEST SMACNA STANDARDS. CLASS 1 FLEXIBLE DUCT SHALL BE USED NOT MORE THAN 5 FT. FROM THE AIR IN/OUTLET. c) BATHROOM & KITCHEN EXHAUST DUCTS AND DRYER VENTS : GALVANIZED SHEET METAL INSTALL IN ACCORDANCE WITH METHODS AND STANDARDS OF ASHRAE AND SMACNA FOR LOW PRESSURE CONSTRUCTION.
20. ALL ELECTRICAL MATERIALS AND EQUIPMENT SHALL BE LISTED BY UNDERWRITER'S LABORATORIES.
21. DUCTWORK SHALL BE SUPPORTED PER SMACNA STANDARDS.
22. SHEET METAL DUCTWORKS SHALL BE CONSTRUCTED PER SMACNA STANDARDS.
23. SEAL ALL TRANSVERSE JOINTS OF AIR DUCTS WITH DUCT SEALANT PER SMACNA TANDARD.
24. SUPPLY AND RETURN AIR DUCTS AND PLENUMS OF A HEATING OR COOLING SYSTEM SHALL BE INSULATED TO ACHIEVE THE MINIMUM THERMAL (R) VALUE AS SET FORTH IN 2019 CMC TABLE E 503.7.2(2) AND 503.7.3(1). APPROVED MATERIALS SHALL BE INSTALLED ON DUCTS AND PLENUMS FOR INSULATING, SOUND DEADENING, OR OTHER PURPOSES. MATERIALS SHALL HAVE A MOLD, HUMIDITY, AND EROSION-RESISTANT SURFACE THAT MEETS THE REQUIREMENTS OF THE REFERENCED STANDARD FOR AIR DUCTS IN CHAPTER 17. INSULATION APPLIED TO THE SURFACE OF DUCTS, INCLUDING DUCT COVERINGS, LININGS, TAPES, AND ADHESIVES, LOCATED IN BUILDINGS SHALL HAVE A FLAME-SPREAD INDEX NOT GREATER THAN TWENTY-FIVE (25) AND A SMOKE DEVELOPED INDEX NOT GREATER THAN FIFTY (50), WHEN TESTED AS A COMPOSITE INSTALLATION.
25. RECTANGULAR DUCT AND PLENUMS SHALL BE FABRICATED OF GALVANIZED STEEL. INSULATE PLENUMS AND RECTANGULAR DUCTING AS INDICATED. DUCT SHALL HAVE THE MINIMUM GAUGE PER SMACNA. FOR PRODUCT CONVEY DUCT, MINIMUM GAUGE OF SHEET METAL SHALL MEET REQUIREMENTS LISTED ON 2019 CMC TABLE 506.2(1) AND TABLE 506.2(2).
26. CONTRACTOR SHALL COORDINATE WITH ARCHITECT BEFORE PURCHASING DIFFUSERS AND REGISTERS FOR APPROPRIATE SIZE, TYPE, FINISH, AND INSTALLATION LOCATION.
27. FLEXIBLE DUCTS MAY BE USED IN BETWEEN JOISTS AND AT CONNECTION TO DIFFUSERS WITHIN A MAXIMUM 5 FEET LENGTH. FLEXIBLE DUCT SHALL BE LISTED AND LABELED UMC 10-1 (UL181).
28. VERIFY THERMOSTAT/SWITCH LOCATIONS W/ARCHITECT PRIOR TO INSTALLATION.
29. MECHANICAL CONTRACTOR SHALL PROVIDE ALL APPURTENANCES WHICH SHALL INCLUDE BUT NOT LIMITED TO WIRING IN CONDUIT AS REQUIRED BY CODE, CONTROL DEVICES, DAMPER, ACTUATORS, MOTORS, LINKAGES, CONTROLLERS, RELAYS, CONTRACTORS, REDUCED VOLTAGE TRANSFORMERS, PNEUMATIC TUBES, PNEUMATIC CONTROL VALVES, ETC. AS REQUIRED TO AUTOMATICALLY PERFORMED ALL FUNCTIONS.
30. DUCT TESTING AND SEALING SHALL BE PERFORMED BY LICENSED BALANCER AND THE BALANCE REPORT SHALL BE SUBMITTED TO OWNER/ENGINEER.
31. PROVIDE ACCESS PANELS FOR ALL FIRE DAMPERS, FIRE/SMOKE DAMPERS AND ACCESS FOR SHUT-OFF AND CONTROL VALVES. COORDINATE ALL CEILING AND WALL ACCESS WITH GENERAL CONTRACTOR.
32. CONDENSATE PIPE SHALL BE ASTM B88 TYPE "M" COPPER WITH THREADED OR SOLDER JOINTS.

COMMERCIAL KITCHEN EXHAUST SYSTEM NOTES

1. DUCTS OR GREASE DUCT SERVING TYPE I KITCHEN HOOD SHALL BE CONSTRUCTED OF AND SUPPORTED BY CARBON STEEL NOT LESS THAN 0.060 OF AN INCH (1.524 MM) (NO. 16 MSG) IN THICKNESS OR STAINLESS STEEL NOT LESS THAN 0.048 OF AN INCH (1.219MM) (NO. 18 MSG) IN THICKNESS PER 2019 CMC 510.5.1. SEAMS, JOINTS, PENETRATIONS, AND DUCT TO HOOD/EQUIPMENT COLLAR CONNECTIONS SHALL HAVE A LIQUID-TIGHT CONTINUOUS EXTERNAL WELD.
2. DUCTS SHALL BE INSTALLED WITH NOT LESS THAN 2 PERCENT SLOPE ON HORIZONTAL RUNS UP TO 75 FEET (22,860 MM) AND NOT LESS THAN 8 PERCENT SLOPE ON HORIZONTAL RUNTS MORE THAN 75 FEET (22,860 MM). FACTORY-BUILT GREASE DUCTS SHALL BE PERMITTED TO BE INSTALLED IN ACCORDANCE WITH THE LISTING AND THE MANUFACTURE'S INSTALLATION INSTURCTIONS. HORIZONTAL DUCTS SHALL BE PROVIDED WITH ACCESS IN ACCORDANCE WITH 2019 CMC SECTION 510.3.3.
   A. DRAINS SHALL BE PROVIDED AT LOW POINTS IN HORIZONTAL DUCTS. WHERE PROVIDED, DRAINS SHALL BE CONTINUOUSLY WELDED TO THE EXHAUST DUCT OR LISTED GREASE DUCT DRAINS IN ACCORDANCE WITH THE TERMS OF THE LISTING AND THE MANUFACTURER'S INSTALLATION INSTRUCTIONS.
   B. DUCTS SHALL BE INSTALLED WITHOUT FORMING DIPS OR TRAPS. IN MANIFOLD (COMMON DUCT) SYSTEMS, THE LOWEST END OF THE MAIN DUCT SHALL BE CONNECTED FLUSH ON THE BOTTOMS WIDTH THE BRANCH DUCT.
3. SEAMS, JOINTS, PENETRATION, AND DUCT-TO-HOOD COOLER CONNECTIONS OF TYPE-I GREASE DUCTS SHALL HAVE A LIQUID-TIGHT CONTINUOUS EXTERNAL WELD PER 2019 510.5.3. BUTT WELDED CONNECTION SHALL NOT BE PERMITTED.
4. GREASE DUCT SUPPORTS, DUCT BRACING AND SUPPORTS SHALL BE OF NONCOMBUSTIBLE MATERIAL SECURELY ATTACHED TO THE STRUCTURE AND DESIGNED TO CARRY GRAVITY AND LATERAL LOADS WITHIN THE STRESS LIMITATIONS OF CALIFORNIA BUILDING CODE. BOLTS, SCREWS, RIVETS AND OTHER MECHANICAL FASTENERS SHALL NOT PENETRATE GREASE DUCT WALLS PER 2019 CMC 510.1.6
5. OPENINGS (2019 CMC 510.3). OPENINGS SHALL BE PROVIDED AT THE SIDES OR AT THE TOP OF THE DUCT, WHICHEVER IS MORE ACCESSIBLE, AND AT CHANGES OF DIRECTION. OPENINGS SHALL BE PROTECTED BY APPROVED ACCESS CONSTRUCTED AND INSTALLED IN ACCORDANCE WITH THE REQUIREMENT 510.3.7. THE EDGE OF THE OPENING SHALL BE NOT LESS THAN 1½ INCHES (38 MM) FROM ALL OUTSIDE EDGE OF DUCT OR WELDED SEAMS (510.3.5). FOR HOOD WITH DAMPERS IN THE EXHAUST OR SUPPLY COLLAR, AN ACCESS PANEL FOR CLEANING AND INSPECTION SHALL BE PROVIDED IN THE DUCT OR THE HOOD COLLAR. THIS ACCESS PANEL SHALL BE AS CLOSE TO THE HOOD AS POSSIBLE BUT SHALL NOT EXCEED EIGHTEEN (18) INCHES (510.3.1). WHERE AN OPENING FOR PERSONNEL ENTRY IS NOT POSSIBLE, OPENINGS LARGE ENOUGH TO PERMIT THOROUGH CLEANING SHALL BE PROVIDED AT 12 FEET (3,658 MM) INTERVALS (510.3.3.1). EXHAUST FANS WITH DUCTWORK CONNECTED TO BOTH SIDES SHALL HAVE ACCESS FOR CLEANING AND INSPECTION WITHIN THREE (3) FEET (0.92 M) OF EACH SIDE OF THE FAN.
   A. HORIZONTAL DUCTS. ON HORIZONTAL DUCTS, AT LEAST ONE 20 INCH BY 20 INCH (508 MM BY 508 MM) OPENING SHALL BE PROVIDED FOR PERSONNEL ENTRY PER 2019 CMC 510.3.3.
   B. VERTICAL DUCTS. ON VERTICAL DUCTWORK WHERE PERSONNEL ENTRY IS POSSIBLE, ACCESS SHALL BE PROVIDED AT THE TOP OF THE VERTICAL RISER TO ACCOMMODATE DESCENT PER 2019 CMC 510.3.4.
   C. ACCESS PANELS. ACCESS PANELS SHALL BE OF THE SAME MATERIAL AND THICKNESS AS THE DUCT. ACCESS PANELS SHALL HAVE A GASKET OR SEALANT THAT IS RATED FOR 1,500°F (815.6°C) AND SHALL BE GREASETIGHT. FASTENERS, SUCH AS BOLTS, WELD STUDS, LATCHES, OR WING NUTS, USED TO SECURE THE ACCESS PANELS SHALL BE CARBON STEEL OR STAINLESS STEEL AND SHALL NOT PENETRATE DUCT WALLS EXCEPT LISTED GREASE DUCT ACCESS DOOR ASSEMBLIES PER 2019 CMC 510.3.6.
   D. OPENINGS FOR INSTALLATION, SERVICING, AND INSPECTION OF LISTED FIRE PROTECTION SYSTEM DEVICES AND FOR DUCT CLEANING SHALL BE PROVIDED IN DUCTS AND ENCLOSURES AND SHALL CONFORM TO THE REQUIREMENTS OF 510.3. ENCLOSURE OPENINGS REQUIRED TO REACH ACCESS PANELS IN THE DUCTWORK SHALL BE LARGE ENOUGH FOR THE REMOVAL OF THE ACCESS PANEL PER 2019 CMC 510.3.7.
6. CLEARANCES. EXCEPT WHERE ENCLOSURES ARE REQUIRED, HOODS, GREASE REMOVAL DEVICES, EXHAUST FANS, AND DUCTS SHALL HAVE A CLEARANCE OF AT LEAST EIGHTEEN (18) INCHES (457.2 MM) TO COMBUSTIBLE MATERIAL, THREE (3) INCHES (76.2 MM) TO LIMITED-COMBUSTIBLE MATERIAL, AND 0 INCHES (0 MM) TO NONCOMBUSTIBLE MATERIAL PER 2019 CMC 507.3. NOTE: EXCEPTION APPLIES.
7. FIELD-APPLIED GREASE DUCT ENCLOSURES. WHERE A CLEARANCE REDUCTION SYSTEM CONSISTING OF A LISTED AND LABELED FIELD-APPLIED GREASE DUCT ENCLOSURE MATERIAL, SYSTEM, PRODUCT, OR METHOD OF CONSTRUCTIONS SPECIFICALLY EVALUATED FOR SUCH PURPOSE IN ACCORDANCE WITH ASTM E2336, THE REQUIRED CLEARANCE SHALL BE IN ACCORDANCE WITH THE LISTING PER 2019 CMC 507.3.2.2.

COMMERCIAL KITCHEN EXHAUST SYSTEM NOTES CONT.

8. ROOFTOP TERMINATION OF EXHAUST SYSTEM. EXHAUST DUCT TERMINATION SHALL HAVE A MINIMUM OF TEN (10) FEET (3,048 MM) OF HORIZONTAL CLEARANCE FROM THE OUTLET TO ADJACENT BUILDINGS, PROPERTY LINES, AND AIR INTAKES; THE EXHAUST FLOW DIRECTED UP AND AWAY FROM THE SURFACE OF THE ROOF SHALL HAVE A MINIMUM OF FORTY (40) INCHES (1,016 MM); ROOF EXHAUST FAN SHOULD COMPLETE WITH GREASE DRAIN. PER 2019 CMC 510.9.1.
9. AIR VELOCITY OF GREASE DUCT SYSTEMS SERVING A TYPE I HOOD SHALL BE NOT LESS THAN 500 FEET PER MINUTE AND NOT TO EXCEED 2,500 FEET PER MINUTE PER 2019 CMC 511.2.
10. ONLY UL 710 LISTED DAMPERS SHALL BE INSTALLED IN EXHAUST DUCTS OR EXHAUST DUCT SYSTEM PER 2019 CMC 512.1

CALIFORNIA GREEN BUILDING CODE NOTES

- 5.410.4 TESTING AND ADJUSTING. TEST AND ADJUST HVAC, KITCHEN MAKE-UP, AND EXHAUST SYSTEMS IN ACCORDANCE WITH CGBSC SECTION 5.410.4.
- 5.504.1.3 TEMPORARY VENTILATION THE PERMANENT HVAC SYSTEM SHALL ONLY BE USED DURING CONSTRUCTION IF NECESSARY TO CONDITION THE BUILDING OR AREAS OF ADDITION OR ALTERATION WITHIN THE REQUIRED TEMPERATURE RANGE FOR MATERIAL AND EQUIPMENT INSTALLATION. IF THE HVAC SYSTEM IS USED DURING CONSTRUCTION, USE RETURN AIR FILTERS WITH A MINIMUM EFFICIENCY REPORTING VALUE (MERV) OF 8. REPLACE ALL FILTERS IMMEDIATELY PRIOR TO OCCUPANCY, OR, IF THE BUILDING IS OCCUPIED DURING ALTERATION, AT THE CONCLUSION OF CONSTRUCTION.
- 5.504.3 COVERING OF DUCT OPENING AND PROTECTION OF MECHANICAL EQUIPMENT DURING CONSTRUCTION. AT THE TIME OF ROUGH INSTALLATION AND DURING STORAGE ON THE CONSTRUCTION SITE UNTIL FINAL STARTUP OF THE HEATING, COOLING AND VENTILATING EQUIPMENT, ALL DUCT AND OTHER RELATED AIR DISTRIBUTION COMPONENT OPENINGS SHALL BE COVERED WITH TAPE, PLASTIC, SHEET METAL OR OTHER METHODS ACCEPTABLE TO THE ENFORCING AGENCY TO REDUCE THE AMOUNT OF DUST, WATER AND DEBRIS WHICH MAY ENTER THE SYSTEM.
- 5.504.5.3 FILTERS IN MECHANICALLY VENTILATED BUILDINGS,PROVIDE REGULARLY OCCUPIED AREAS OF THE BUILDING WITH AIR FILTRATION MEDIA FOR OUTSIDE AND RETURN AIR THAT PROVIDES AT LEAST A MINIMUM EFFICIENCY REPORTING VALUE (MERV) OF 13. MERV13 FILTER SHALL BE INSTALLED PRIOR TO OCCUPANCY, AND RECOMMENDATION FOR MAINTENANCE WITH FILTERS OF THE SAME SHALL BE INCLUDED IN THE OPERATION AND MAINTENANCE MANUAL.
- 5.508.1 OZONE DEPLETION AND GREENHOUSE GAS REDUCTIONS. INSTALLATIONS OF HVAC, REFRIGERATION AND FIRE SUPPRESSION EQUIPMENT SHALL COMPLY WITH SECTIONS 5.508.1.1 AND 5.508.1.2.

APPLICABLE CODE

2019 CALIFORNIA BUILDING CODE
2019 CALIFORNIA MECHANICAL CODE
2019 CALIFORNIA PLUMBING CODE
2019 CALIFORNIA ENERGY CODE
2019 CALIFORNIA FIRE CODE
2019 CALIFORNIA GREEN BUILDING CODE
2019 NFPA 13
ALL AMENDMENTS AND SUPPLEMENTS TO ABOVE CODES
ALL CITY OF FREMONT ORDINANCES AND AMENDMENTS TO ABOVE CODES
ALL COUNTY OF ALAMEDA ORDINANCES AND AMENDMENTS TO ABOVE CODES

SCOPE OF WORK

- DEMOLISH AND REMOVE EXISTING MECHANICAL EQUIPMENT AND ASSOCIATED COMPONENTS PER PLAN AND COORDINATE WITH GC FOR ROOF OPENING PATCHING AND NEW WATERPROOFING.
- FURNISH AND INSTALL NEW ROOF TOP PACKAGED AC UNITS (RTU) AND ASSOCIATED DUCTWORK SYSTEMS WITH ALL OTHER REQUIRED COMPONENTS FOR PROPER SYSTEM FUNCTIONALITY.
- FURNISH AND INSTALL NEW KITCHEN TYPE-I EXHAUST AND MAKEUP AIR SYSTEMS WITH ASSOCIATED DUCTWORK AND ALL OTHER REQUIRED COMPONENTS FOR PROPER SYSTEM FUNCTIONALITY.
- FURNISH AND INSTALL ENVIRONMENTAL EXHAUST SYSTEM WITH ALL OTHER REQUIRED COMPONENTS FOR PROPER SYSTEM FUNCTIONALITY.
- FURNISIH AND INSTALL SPLIT HEAT PUPM SYSTEM WITH ALL OTHER REQUIRED COMPONENTS FOR PROPER SYSTEM FUNCTIONALITY.
- PROVIDE MATERIAL AND LABOR FOR HAVC SYSTEM BALANCING, TESTING, AND SCHEDULING.
- PROVIDE FACTORY START-UP, TESTING, AND CONTROL PROGRAMMING TO ROOF TOP UNIT (RTU), SPLIT HEAT PUPM AND KITCHEN EXHAUST/MAKEUP AIR SYSTEMS.
- PROVIDE ON-SITE OPERATIONAL TRAINING AND MAINTENANCE TRAINING TO OWNER ON ALL INSTALLED MECHANICAL SYSTEMS, INCLUDING AHU AND KEF SYSTEMS.

DRAWING INDEX

M-0.1	GENERAL NOTES, CODES, SCOPE OF WORK AND DRAWING INDEX
M-0.2	ABBREVIATIONS, AND LEGENDS
M-0.3	MECHANICAL EQUIPMENT SCHEDULES
M-0.4	MECHANICAL EQUIPMENT SCHEDULES
M-0.5	MECHANICAL EQUIPMENT SCHEDULES
M-0.6	MECHANICAL DETAILS
M-0.7	MECHANICAL DETAILS
M-0.8	MECHANICAL DETAILS
M-1.0	MECHANICAL REFLECTED CEILING PLAN-AREA A
M-1.1	MECHANICAL REFLECTED CEILING PLAN-AREA B
M-2.0	MECHANICAL ROOF DEMOLITION PLAN
M-2.1	MECHANICAL ROOF PLAN AREA-A
M-2.2	MECHANICAL ROOF PLAN AREA-B
M-3.0	KITCHEN HOOD SCHEDULES
M-3.1	KITCHEN HOOD SCHEDULES
M-3.2	KITCHEN HOOD OPTIONS
M-3.3	KITCHEN HOOD DRAWINGS
M-3.4	KITCHEN HOOD DRAWINGS
M-3.5	KITCHEN HOOD DRAWINGS
M-3.6	KITCHEN HOOD SPECIFICATION
M-3.7	KEF SCHEDULES
M-3.8	MAU SCHEDULES
M-3.9	KEF OPTIONS
M-4.0	MAU OPTIONS
M-4.1	KEF AND MAU CURB SCHEDULES
M-4.2	KEF DETAILS
M-4.3	KEF DETAILS
M-4.4	MAU DETAILS
M-4.5	MAU DETAILS
M-4.6	KITCHEN HOOD CONTROL SCHEDULES
M-5.0	MECHANICAL PRESCRIPTIVE TITLE 24 COMPLIANCE
M-5.1	MECHANICAL PRESCRIPTIVE TITLE 24 COMPLIANCE
M-5.2	MECHANICAL PRESCRIPTIVE TITLE 24 COMPLIANCE

PLAN CHECK NOTES

ALL TYPE-I GREASE DUCT SHALL BE TESTED ON GROUND PRIOR TO INSTALL

1

Alameda County
Dept. of Environmental Health
Approved By: T. Tran

CO-AR DESIGN, INC.
680 Brea Canyon Rd., Ste. 178
Diamond Bar, CA 91789

Office: 909-598-0186
http:\\www.coardesign.com

Dennis J. Lee, Architect
dennisl@coardesign.com

THESE DRAWINGS ARE THE PROPERTY OF THE ARCHITECT. THE DESIGNS SHOWN AND DESCRIBED HERIN INCLUDING ALL TECHNICAL DRAWINGS ARE PROPRIETARY AND CANNOT BE COPIED, DUPLICATED OR COMMERCIALLY EXPLOITED, IN WHOLE OR IN PART. THE DRAWINGS AND SPECIFICATIONS SHALL NOT BE USED BY THE OWNER ON OTHER PROJECTS, FOR ADDITIONS TO THIS PROJECT, OR FOR COMPLETION OF THIS PROJECT BY OTHERS THE OWNER AGREES TO HOLD HARMLESS, INDEMNIFY AND DEFEND THE ARCHITECT AGAINST ALL DAMAGES, CLAIMS AND LOSSES, INCLUDING DEFENSE COSTS, ARISING OUT OF ANY REUSE OF THE PLANS AND SPECIFICATIONS WITHOUT THE WRITTEN AUTHORIZATION OF THE ARCHITECT OF RECORD

COPYRIGHT © 2022 CO-AR DESIGN, INC., ALL RIGHTS RESERVED.

SEAL

REGISTERED PROFESSIONAL ENGINEER
JIA HUI PAN
M35374
EXP. 6/30/23
MECHANICAL
STATE OF CALIFORNIA

NOTES

JHP Engineering and Design Services Inc.
3103 Independence Drive
Livermore, CA 94551
TEL: 925-409-2508
CEL: 510-468-0613
FAX: 510-788-6039

PROJECT

SALTALK FREMONT KITCHEN TENANT IMPROVEMENT

42550 ALBRAE ST.,
FREMONT, CA 94538

CLIENT

SALTALK, INC.
3334 VICTOR CT.,
SANTA CLARA, CA 95054

SUBMITTALS/ REVISIONS

1	HEALTH/USD SUBMITTAL		04/01/2022
2	2ND BLD. SUBMITTAL	1	07/22/2022
3	3RD BLD. SUBMITTAL		08/30/2022
4	3RD USD. SUBMITTAL		09/01/2022
5	2ND HEALTH SUBMITTAL		09/29/2022

PROJECT NO.	21127
SCALE	AS SHOWN
DATE	2/10/2022
DRAWN BY	TL / YC
CHECKED BY	JP

SHEET TITLE

GENERAL NOTES, CODES ,SCOPE OF WORK AND DRAWING INDEX

SHEET NO

M-0.1

ABBREVIATIONS

AAV	AUTOMATIC AIR VENT	INS	INSULATION
AC	AIR CONDITIONER	L	LONG (DIM)
ACH	AIR CHANGES PER HOUR	LAB	LABORATORY
AD	ACCESS DOOR, AUTOMATIC DAMPER	LBS	POUNDS
AFCT	AIR FLOW CONTROL TERMINAL	LDB	LEAVING DRY BULB TEMPERATURE
AFF	ABOVE FINISHED FLOOR	LWB	LEAVING WET BULB TEMPERATURE
AP	ACCESS PANEL	LWT	LEAVING WATER TEMPERATURE
APPROX	APPROXIMATE	MAX	MAXIMUM
ARCH	ARCHITECTURAL	MBH	1000 BTUH
AUTO	AUTOMATIC	MCV	MOTORIZED CONTROL VALVE
BAL	BALANCING	MD	MOTORIZED DAMPER
BC	BALANCING COCK	MECH	MECHANICAL
BD	BACKDRAFT DAMPER	MFR	MANUFACTURER
BHP	BRAKE HORSEPOWER	MIN	MINIMUM
BLDG	BUILDING	MISC	MISCELLANEOUS
BOD	BOTTOM OF DUCT	MUW	MAKE UP WATER
BOP	BOTTOM OF PIPE	N2	NITROGEN
BSMT	BASEMENT	NC	NORMALLY CLOSED
BD	BOARD	NIC	NOT IN CONTRACT
BTU	BRITISH THERMAL UNIT	NO	NORMALLY OPEN, NUMBER
BTUH	BRITISH THERMAL UNIT / HOUR	NTS	NOT TO SCALE
BV	BALANCING VALVE, BALL VALVE	OAD	OUTSIDE AIR DAMPER
C	CONVECTOR	OA	OUTSIDE AIR
CAP	CAPACITY	OC	ON CENTER
CC	COOLING COIL	OD	OUTSIDE DIAMETER
CD	CONDENSATE DRAIN	OS&Y	OUTSIDE SCREW & YOKE
CFM	CUBIC FEET PER MINUTE	P	PUMP
CH	CHILLER	PA	PIPE ANCHOR
CHR	HVAC CHILLED WATER RETURN	PCR	PUMPED CONDENSATE RETURN
CHS	HVAC CHILLED WATER SUPPLY	PD	PRESSURE DROP
CLG	CEILING	PLUMB	PLUMBING
CLR	CLEAR	POC	POINT OF CONNECTION
CONC	CONCRETE	PRV	PRESSURE REDUCING VALVE
COND	CONDENSATE	PCHWR	PROCESS CHILLED WATER RETURN
CONN	CONNECTION	PCHWS	PROCESS CHILLED WATER SUPPLY
CONT	CONTINUOUS/CONTINUE	PSI	POUNDS PER SQUARE INCH
CONTR	CONTRACTOR	PSIG	POUNDS PER SQUARE INCH GAUGE
CU	COPPER (PIPE)	PV	PLUG VALVE
CV	CONSTANT VOLUME, CHECK VALVE	R	RADIUS; RISER, RADIANT HEATER
Cv	FLOW COEFFICIENT	RA	REVERSE ACTING
CW	COLD WATER	RAD	RADIANT HEATER, OR RETURN/RELIEF AIR DAMPER
CWR	CONDENSER WATER RETURN		
CWS	CONDENSER WATER SUPPLY		
DA	DIRECT ACTING	REQD	REQUIRED
DET	DETAIL	RHC	REHEAT COIL
DIAG	DIAGRAM	RHHW	REHEAT HEATING HOT WATER
DIM	DIMENSION	RM	ROOM
DN	DOWN	RPM	REVOLUTIONS PER MINUTE
DP	DIFFERENTIAL PRESSURE	SA	SUPPLY AIR
DPS	DIFFERENTIAL PRESSURE SWITCH	SAD	SEE ARCHITECTURAL DRAWING
DWG	DRAWING	SCW	SOFT COLD WATER
EA	EACH OR EXHAUST AIR	SD	STORM DRAIN, SMOKE DETECTOR
EAD	EXHAUST AIR DAMPER	SF	SUPPLY FAN, SQUARE FEET
EDB	ENTERING DRY BULB TEMPERATURE	SIM	SIMILAR
EF	EXHAUST FAN	SM	SHEET METAL
EL	ELEVATION	SPEC	SPECIFICATIONS
ELEC	ELECTRICAL	SP	STATIC PRESSURE, STAIR PRESSURIZATION
ELEV	ELEVATOR/ELEVATION		
EP	ELEVATOR SHAFT PRESSURIZATION	SQ	SQUARE
EQPT	EQUIPMENT	SSTL/SS	STAINLESS STEEL
ET	EXPANSION TANK	ST	SOUND TRAP, STEAM TRAP
EWB	ENTERING WET BULB TEMPERATURE	STD	STANDARD
EWT	ENTERING WATER TEMPERATURE	STL	STEEL
EXH	EXHAUST	STP	STAIRWELL PRESSURIZATION
EXIST	EXISTING	STM	STEAM
EXP	EXPOSED	STR	STARTER
F	FILTERS, FAHRENHEIT, FUTURE	STRUCT	STRUCTURAL
FC	FLEXIBLE CONNECTION	TC	TEMPERATURE CONTROL
FD	FIRE DAMPER		
FE	FUME EXHAUST	TCP	TEMPERATURE CONTROL PANEL
FE-SS	FUME EXHAUST-STAINLESS STEEL	TD	TRANSFER DUCT
FH	FUME HOOD	TEMP	TEMPERATURE, TEMPORARY
FIN	FINISHED	THRU	THROUGH
FLEX	FLEXIBLE	TON	12,000 BTUH OF COOLING
FLR	FLOOR	TYP	TYPICAL
FM	FLOW METER, FORCE MAIN FAN	UA	UTILITY ACCESS
FPHF	POWERED HEPA FILTER	UON	UNLESS OTHERWISE NOTED
FPM	FEET PER MINUTE	UTR	UP THROUGH ROOF
FS	FLOW SWITCH	V	VENT
FSD	FIRE/SMOKE COMBINATION DAMPER	VAV	VARIABLE AIR
FT()	FOOT OR FEET, FLOAT AND THERMOSTATIC	VD	VOLUME VOLUME
GA	GAGE	VERT	DAMPER VERTICAL
GALV	GALVANIZED	VFD	VARIABLE FREQUENCY DRIVE
GE	GENERAL EXHAUST	VIB	VIBRATION
GLV	GLOBE VALVE	VOL	VOLUME
GPM	GALLONS PER MINUTE	W	WIDTH
GR	GRAVITY CONDENSATE RETURN	WE	WELDING EXHAUST
GV	GATE VALVE	WF	WIDE FLANGE BEAM
GYP	GYPSUM	WFS	WATER FLOW SWITCH
GWE	GLASS WASH EXHAUST	WG	WATER GAUGE
H,HT	HEIGHT	WT	WEIGHT
HB	HOSE BIBB	W/	WITH
HC	HEATING COIL	W/O	WITHOUT
HD	HEAD (FEET OF WATER)	(E)	EXISTING
HHWS	HEATING HOT WATER SUPPLY	(F)	FUTURE
HHWR	HEATING HOT WATER RETURN	(N)	NEW
HP	HORSEPOWER	(R)	RELOCATE
HRC	HEAT RECOVERY COIL	@	AT
HRR	HEAT RECOVERY RETURN	℄	CENTER LINE
HRS	HEAT RECOVERY SUPPLY	#	NUMBER
HVAC	HEATING VENTILATING AND AIR CONDITIONING	&	AND
		ℙ	PLATE
HX	HEAT EXCHANGER	Ø	DIAMETER, PHASE
HZ	HERTZ (CYCLES PER SEC)	[	CHANNEL
IB	INVERTED BUCKET	2P	2 POSITION
ID	INSIDE DIAMETER	2W	2 WAY
IN(")	INCH OR INCHES	3W	3 WAY
		°F	DEGREE FAHRENHEIT

DUCT LEGEND

SINGLE LINE | DOUBLE LINE

- 12x8 — RECTANGULAR DUCT WITH NET INSIDE DIMENSIONS SHOWN IN INCHES
- 12x8 — DUCT WITH UNLINED INTERNAL ACOUSTICAL INSULATION. DIMENSIONS SHOWN ARE NET INSIDE IN INCHES
- 12x8 — DUCT WITH LINED INTERNAL ACOUSTICAL INSULATION. (MYLAR BAGGED AND COVERED WITH PERFORATED METAL.) DIMENSIONS SHOWN ARE NET INSIDE IN INCHES
- SUPPLY AIR DUCT - TURNING UP OR TOWARD
- SUPPLY AIR DUCT - TURNING DOWN OR AWAY
- EXHAUST AIR DUCT - TURNING UP OR TOWARD
- EXHAUST AIR DUCT - TURNING DOWN OR AWAY
- SUPPLY / EXHAUST / RETURN — RECTANGULAR DUCT SECTION
- 12'Ø — ROUND DUCT WITH NET INSIDE DIMENSION SHOWN IN INCHES
- ROUND AIR DUCT - TURNING UP OR TOWARD
- ROUND AIR DUCT - TURNING DOWN OR AWAY
- S/1, R/1 — ROUND DUCT SECTION: S = SPECIAL EXHAUST; C = CHEMISTRY HOOD; R = RADIOISOTOPE HOOD; # = FLOOR HOOD LOCATION; W = WELDING EXHAUST; D = DUMP ROOM EXHAUST
- UP — INCLINED RISE; DN — INCLINED DROP — WITH RESPECT TO AIR FLOW. 15° NOMINAL INCLINE WITH RADIUS TURNS = DEPTH OF DUCT.
- W, R — R/W = 1. ROUND DUCT SIMILAR TO RECTANGULAR
- TURNING VANES - AIR FOIL TYPE.
- RECTANGULAR TO RECTANGULAR OR ROUND TO ROUND DUCT TRANSFORMATION. MAXIMUM 15° INCLUDED ANGLE EXCEPT WHERE SHOWN OTHERWISE.
- 10x10 — 10'Ø — RECTANGULAR TO ROUND DUCT TRANSFORMATION
- R, 6 — BRANCH DUCT SPLIT WITH 6 INCH WIDTH AND MINIMUM R = WIDTH OF BRANCH DUCT DOWNSTREAM. ELBOW TURNING VANE OPTIONAL.
- CONICAL TAKE-OFF
- RECTANGULAR TAKE-OFF WITH TRANSITION TO ROUND. TAKE-OFF AREA MIN. 150% OF ROUND DUCT SIZE.
- RECT TO Ø; RECT, ROUND; 1.5D, 1.25D, 45°, D — TAP ENTRY AREA EQUALS 150% OF BRANCH AREA
- FLARED TAP AT RISERS.
- DUCT CHANGE IN PLANE. PLAN AND ELEVATION. USE 45° RADIUS ELBOW WHERE PRACTICAL. ROUND DUCT SIMILAR.
- 24x12, 200, 10'Ø, 18x8; 16x6, 22x10, 10'Ø, 150, 10'Ø, D — DIFFUSER DROP. PLAN AND ELEVATION
- 24x12, VD, 200, 12x12; VD, EQUAL, 24x12, 12x12, 200, 12x12 — DIFFUSER DROP. PLAN AND ELEVATION
- F.C. — FLEXIBLE DUCT CONNECTION
- FLEXIBLE DUCT
- VD, R — SINGLE BLADE OR MULTIBLADE VOLUME DAMPER (BLANK OR VD) R=REMOTE OPERATOR
- BD, B.D. — BACKDRAFT DAMPER
- FD, FSD — FIRE/SMOKE COMBINATION DAMPER IN DUCT ACCESS PANEL REQUIRED
- AD/AP — ACCESS DOOR/PANEL IN DUCT OR PLENUM

DUCT LEGEND CONT

- A; 200, 12x6x3, A — CEILING SUPPLY DIFFUSER
- C; -200, 20x10, C — CEILING RETURN REGISTER
- C; -200, 20x10, C — CEILING EXHAUST REGISTER
- 400, 24x10 — SIDEWALL SUPPLY REGISTER
- -200, 24x10 — SIDEWALL EXHAUST/RETURN REGISTER
- D; 250, 12'Øx1, D — CEILING SUPPLY DIFFUSER WITH FLEXIBLE DUCT

TOP FIGURE INDICATES CFM. BOTTOM FIGURES INDICATE NECK SIZE AND NUMBER OF THROWS ON SUPPLY DIFFUSER. ARROWS ON PLAN DESIGNATE DIRECTIONS OF THROW, OR 4-WAY THROW IF NOT SHOWN. DUCT SIZE IS FULL SIZE OF DIFFUSER/REGISTER CONNECTION UNLESS NOTED OTHERWISE. LETTER DESIGNATES SPECIFIED TYPE OR FACE SIZE. SEE SPEC.

- A; 1000, 40x(2)1"SLOTS — LINEAR SLOT DIFFUSER WITH FLEXIBLE DUCT — TOP FIGURE INDICATES CFM. BOTTOM FIGURES INDICATE ACTIVE SLOT LENGTH, NUMBER AND WIDTH OF SLOT(S). LETTER DESIGNATES SPECIFIED TYPE. SEE SPEC.
- DP — DIFFERENTIAL PRESSURE SENSOR
- DSD — DUCT SMOKE DETECTOR OR AIR SAMPLING SMOKE DETECTOR
- J — ELECTRICAL JUNCTION BOX
- TS — ROOM THERMOSTAT OR SENSOR WITH TAG NUMBER(S) IF SERVING MORE THAN ONE TERMINAL OR REQUIRED FOR CLARITY.
- 1 — SHEET NOTE TAG
- 1 / M4.1 — DETAIL / DIAGRAM NO. REFERENCED SHEET NO. — DETAIL/ DIAGRAM TAG
- A / M4.1 — SECTION NO. REF. SHEET NO. — SECTION TAG
- FE / N1 — EQUIPMENT TYPE AREA-EQUIPMENT NO. — EQUIPMENT TAG
- FAN

FD	FIRE SMOKE DAMPER
POC	POINT OF CONNECTION
POD	POINT OF DISCONNECT
FSD	FIRE AND SMOKE DAMPER COMBO

Alameda County
Dept. of Environmental Health
Approved By: T. Tran

CO-AR DESIGN, INC.
680 Brea Canyon Rd., Ste. 178
Diamond Bar, CA 91789

Office: 909-598-0186
http:\\www.coardesign.com

Dennis J. Lee, Architect
dennisl@coardesign.com

THESE DRAWINGS ARE THE PROPERTY OF THE ARCHITECT. THE DESIGNS SHOWN AND DESCRIBED HERIN INCLUDING ALL TECHNICAL DRAWINGS ARE PROPRIETARY AND CANNOT BE COPIED, DUPLICATED OR COMMERCIALLY EXPLOITED, IN WHOLE OR IN PART. THE DRAWINGS AND SPECIFICATIONS SHALL NOT BE USED BY THE OWNER ON OTHER PROJECTS, FOR ADDITIONS TO THIS PROJECT, OR FOR COMPLETION OF THIS PROJECT BY OTHERS. THE OWNER AGREES TO HOLD HARMLESS, INDEMNIFY AND DEFEND THE ARCHITECT AGAINST ALL DAMAGES, CLAIMS AND LOSSES, INCLUDING DEFENSE COSTS, ARISING OUT OF ANY REUSE OF THE PLANS AND SPECIFICATIONS WITHOUT THE WRITTEN AUTHORIZATION OF THE ARCHITECT OF RECORD.

COPYRIGHT © 2022 CO-AR DESIGN, INC., ALL RIGHTS RESERVED.

SEAL

REGISTERED PROFESSIONAL ENGINEER
JIA HUI PAN
M35374
EXP. 6/30/23
MECHANICAL
STATE OF CALIFORNIA

NOTES

JHP Engineering and Design Services Inc.
3103 Independence Drive
Livermore, CA 94551
TEL: 925-409-2508
CEL: 510-468-0613
FAX: 510-788-6039

PROJECT

SALTALK FREMONT KITCHEN TENANT IMPROVEMENT

42550 ALBRAE ST.,
FREMONT, CA 94538

CLIENT

SALTALK, INC.
3334 VICTOR CT.,
SANTA CLARA, CA 95054

SUBMITTALS/ REVISIONS

1	HEALTH/USD SUBMITTAL	04/01/2022
2	2ND BLD. SUBMITTAL	07/22/2022
3	3RD BLD. SUBMITTAL	08/30/2022
4	3RD USD SUBMITTAL	09/01/2022
5	2ND HEALTH SUBMITTAL	09/29/2022

PROJECT NO	21127
SCALE	AS SHOWN
DATE	2/10/2022
DRAWN BY	TL / YC
CHECKED BY	JP

SHEET TITLE

ABBREVIATIONS, AND LEGENDS

SHEET NO

M-0.2

BIMcloud: COAR-CONFERENCE - BIMcloud Basic for ARCHICAD 25/1902201-Fremont-Ghost Kitchen Thursday, February 10, 2022 1:47 PM

MECHANICAL EQUIPMENT SCHEDULE

PACKAGED ROOFTOP HEAT PUPM UNIT SCHEDULE

EQMT. TAG	AREA SERVED	MANUFACTURE / MODEL NO.	COOLING PERFORMANCE					HEATING PERFORMANCE				SUPPLY FAN DATA							ELECTRICAL DATA						FILTER DATA (QUANTITY/ SIZE)	TOTAL WEIGHT	REMARKS
			NOMINAL COOLING TONNAGE	TOTAL SENSIBLE (MBTUH)	EER/IEER /SEER	NO. OF COMPRE-SSOR	COOLING STAGE	TOTAL CAPACITY (MBTUH)	COP (HSPF)	MIN. HEATING STAGE	HEATING STAGE (%)	OPERATING AIRFLOW (CFM)	MIN. OSA	E.S.P. (IN W.G.)	MOTOR RATED HP	MOTOR BHP	FAN SPEED (RPM)	FAN DRIVE TYPE	VOLT	PHASE /HZ	MCA	FLA	MOCP	ELECTRIC HEATER (KW)			
RTU-01	DINING AREA/ RESTROOM/ CORRIDOR	CARRIER / 50HCQD08A2A6-0A0G0	7.5	64.81	11.02/13.7 /---	2	2	89.6	3.4	2	N/A	3,000	1,750	1.2	2.9	1.58	882	BELT DRIVE	460	3/60	40	39	40	12.8	4/ 20x20X2	1,364	1~8

REMARKS:

1. PROVIDE AND INSTALL THE FOLLOWING MANUFACTURER INSTALLED OPTIONS AND FIELD INSTALLED ACCESSORIES:
   a. TWO STAGE COOLING COMPRESSORS AND TWO STAGE HEATING HEAT PUMP.
   b. FACTORY BELT-DRIVE FAN MOTOR WITH MOTORIZED DAMPER DOWNFLOW CONFIGURATION.
   c. TITLE 24 COMPLIANT ECONOMIZER WITH FDD AND BAROMETRIC RELIEF DAMPER.
   d. PROVIDE UNIT WITH FACTORY WITH WEATHER HOOD, 2-INCH MERV-13 DISPOSABLE RETURN AND OUTSIDE AIR FILTERS, AND DRAIN PAN.
2. PROVIDE AND INSTALL FACTORY RECOMMENDING ROOF CURB WITH KNOCK-DOWN.
3. COORDINATE WITH PLUMBING CONTRACTOR FOR INSTALLATION OF ¾"Ø CONDENSATE DRAIN TO UNIT WITH VENT AND TRAP.
4. UNIT SHALL BE PROGRAMMED TO OPERATE 2 HOURS BEFORE BUSINESS HOUR FOR PRE-HEAT/PRE-COOL SPACE FOR OPTIMUM SPACE TEMPERATURE CONTROL. CONFIRM WITH OWNER FOR BUSINESS HOURS.
5. PROVIDE (N) DUCT SMOKE DETECTOR WITH REMOTE ALARM ACCESSORY FOR MONITORING, TESTING, AND HORN.
6. PROVIDE UNIT WITH T-24 COMPLIANT WI-FI COMMERCIAL THERMOSTAT BY EQUIPMENT MANUFACTURER (CARRIER 33CONNECTSTAT43) AND INSTALL WITH VENTILATED CLEAR PLASTIC LOCK BOX.
7. PROVIDE FACTORY POWER EXHAUST WITH ALL REQUIRED ACCESSORIES TO SATISFY TITLE 24. BRAND/MODEL: MICROMETL/PECD-SRT34CA -D2DH-4M1.COORDINATE W/ ELECTRICAL FOR POWER PROVISION: 460V/3PH, 1.0 HP, 2.5 FLA, 3.1 FLA, 5.6 MOCP.
8. PROVIDE CO_2 SENSOR PER LOCATION SHOWN ON PLAN AT 5 FEET ABOVE FINISHED FLOOR FOR DEMAND CONTROL VENTILAITON. SET CO_2 CONCENTRATION SETPOINT TO 600 PPM PLUS OUTSIDE CO_2 CONCENTRATION. OUTDOOR AIR DAMPER SHALL OPEN TO MAXIMUM POSITION AUTOMATICALLY WHEN CO2 CONCENTRATION IN SPACE IS ABOVE SETPOINT AND SHALL CLOSE BACK TO MINIMUM POSITION WHEN SETPOINT IS BELOW 400 PPM (ADJ.).

EXHAUST FAN SCHEDULE

TAG	AREA SERVED	MAKE/MODEL	CFM	ESP	FRPM	ELECTRICAL						WEIGHT (LBS)	REMARK
						VOLTS	Ø	BHP	ENCLOSURE	FLA	HP/WATT		
EF-01	RESTROOM	GREENHECK / SQ-99-VG	600	0.75	1,652	208	1	0.23	ODP	--	¾ /--	69	1,2,3,4
EF-02	RESTROOM	GREENHECK / SQ-99-VG	600	0.75	1,652	208	1	0.23	ODP	--	¾ /--	69	1,2,3,4
EF-03	JANITOR	GREENHECK / SQ-99-VG	600	0.75	1,652	208	1	0.23	ODP	--	¾ /--	69	1,2,3,4
EF-04	RECEIVING	GREENHECK / SQ-99-VG	600	0.75	1,652	208	1	0.23	ODP	--	¾ /--	69	1,2,3,4

REMARK:

1. PROVIDE FAN WITH FACTORY INSTALLED OR FIELD INSTALLED BACK-DRAFT DAMPER AT DISCHARGE OF FAN.
2. ELECTRICAL TO PROVIDE AND INSTALL DISCONNECT SWITCH.
3. EXHAUST FAN SHALL BE CONTROLLED BY TIME CLOCK FOR CONTINUOUSLY OPERATION DURING OPERATING HOURS.
4. PROVIDE FACTORY ROOF CURB FOR ROOF MOUNTING. COORDINATE WITH GC FOR ROOF OPENING AND WATER PROOFING.

INSULATION SCHEDULE

ITEM	LOCATION	INSULATION TYPE	MIN. R-VALVE	MIN. THICKNESS	REMARK
SUPPLY AIR DUCT/PLENUM	EXTERIOR AND UNCONDITIONAL SPACE	FIBERGLASS	R-8	3"	①②
RETURN AIR DUCT/PLENUM	EXTERIOR AND UNCONDITIONAL SPACE	FIBERGLASS	R-8	3"	①②
SUPPLY AIR DUCT/PLENUM	INDIRECT CONDITIONAL SPACE	FIBERGLASS	R-4.2	1.5"	①②
INTERNAL ACOUSTICAL LINING IN SUPPLY DUCT/PLENUM	ALL	ACOUSTIC FOAM	R-4.2	1"	①②
REFRIGERANT PIPE (PIPE<1"Ø)	ALL	FIBERGLASS	R-8.5	1"	①③
REFRIGERANT PIPE (PIPE<1.5"Ø)	ALL	FIBERGLASS	R-12.5	1.5"	①③

REMARKS:

① ALL INSULATION OR ACCOUSTICAL LINING SHALL HAVE SMOKE SPREAD INDEX LESS THAN 50 AND FLAME SPREAD INDEX LESS THAN 25.

② ALL EXTERIOR DUCTWORK AND PLENUMS SHALL BE INTERNALLY INSULATED.

③ PROVIDE ALUMINUM JACKETING FOR ALL EXTERIOR REFRIGERANT PIPES.

Alameda County
Dept. of Environmental Health
Approved By: T. Tran

SPLIT HEAT PUMP CONDENSING UNIT SCHEDULE

TAG	SERVING	MAKE/MODEL	TONNAGE	COOLING (MBH)	SEER/EER	HEATING (MBH)	HSPF	VOLT	Ø	RLA/ LRA	MCA	MOCP	WEIGHT (LBS)	MAX. PIPE LENGTH / ELEV. DIFFERENCE (FT)	REMARK
CU-K1	FCU-K1	LG / LUU247HV	2.0	24	17/12	27.0	10.0	208	1	13.5/ --	18.1	30	133	164/98	1,2,3,4,5
CU-K2	FCU-K2	LG / LUU247HV	2.0	24	17/12	27.0	10.0	208	1	13.5/ --	18.1	30	133	164/98	1,2,3,4,5
CU-K3	FCU-K3	LG / LUU247HV	2.0	24	17/12	27.0	10.0	208	1	13.5/ --	18.1	30	133	164/98	1,2,3,4,5
CU-K4	FCU-K4	LG / LUU247HV	2.0	24	17/12	27.0	10.0	208	1	13.5/ --	18.1	30	133	164/98	1,2,3,4,5
CU-K5	FCU-K5	LG / LUU247HV	2.0	24	17/12	27.0	10.0	208	1	13.5/ --	18.1	30	133	164/98	1,2,3,4,5
CU-K6	FCU-K6	LG / LUU247HV	2.0	24	17/12	27.0	10.0	208	1	13.5/ --	18.1	30	133	164/98	1,2,3,4,5
CU-K7	FCU-K7	LG / LUU247HV	2.0	24	17/12	27.0	10.0	208	1	13.5/ --	18.1	30	133	164/98	1,2,3,4,5
CU-K8	FCU-K8	LG / LUU247HV	2.0	24	17/12	27.0	10.0	208	1	13.5/ --	18.1	30	133	164/98	1,2,3,4,5
CU-K9	FCU-K9	LG / LUU247HV	2.0	24	17/12	27.0	10.0	208	1	13.5/ --	18.1	30	133	164/98	1,2,3,4,5
CU-K10	FCU-K10	LG / LUU247HV	2.0	24	17/12	27.0	10.0	208	1	13.5/ --	18.1	30	133	164/98	1,2,3,4,5
CU-K11	FCU-K11	LG / LUU247HV	2.0	24	17/12	27.0	10.0	208	1	13.5/ --	18.1	30	133	164/98	1,2,3,4,5
CU-K12	FCU-K12	LG / LUU247HV	2.0	24	17/12	27.0	10.0	208	1	13.5/ --	18.1	30	133	164/98	1,2,3,4,5
CU-K13	FCU-K13	LG / LUU247HV	2.0	24	17/12	27.0	10.0	208	1	13.5/ --	18.1	30	133	164/98	1,2,3,4,5
CU-K14	FCU-K14	LG / LUU247HV	2.0	24	17/12	27.0	10.0	208	1	13.5/ --	18.1	30	133	164/98	1,2,3,4,5
CU-K15	FCU-K15	LG / LUU247HV	2.0	24	17/12	27.0	10.0	208	1	13.5/ --	18.1	30	133	164/98	1,2,3,4,5
CU-K16	FCU-K16	LG / LUU247HV	2.0	24	17/12	27.0	10.0	208	1	13.5/ --	18.1	30	133	164/98	1,2,3,4,5
CU-K17	FCU-K17	LG / LUU247HV	2.0	24	17/12	27.0	10.0	208	1	13.5/ --	18.1	30	133	164/98	1,2,3,4,5
CU-K18	FCU-K18	LG / LUU247HV	2.0	24	17/12	27.0	10.0	208	1	13.5/ --	18.1	30	133	164/98	1,2,3,4,5
CU-K19	FCU-K19	LG / LUU247HV	2.0	24	17/12	27.0	10.0	208	1	13.5/ --	18.1	30	133	164/98	1,2,3,4,5
CU-K20	FCU-K20	LG / LUU247HV	2.0	24	17/12	27.0	10.0	208	1	13.5/ --	18.1	30	133	164/98	1,2,3,4,5
CU-K21	FCU-K21	LG / LUU247HV	2.0	24	17/12	27.0	10.0	208	1	13.5/ --	18.1	30	133	164/98	1,2,3,4,5
CU-K22	FCU-K22	LG / LUU247HV	2.0	24	17/12	27.0	10.0	208	1	13.5/ --	18.1	30	133	164/98	1,2,3,4,5
CU-K23	FCU-K23	LG / LUU247HV	2.0	24	17/12	27.0	10.0	208	1	13.5/ --	18.1	30	133	164/98	1,2,3,4,5
CU-K24	FCU-K24	LG / LUU247HV	2.0	24	17/12	27.0	10.0	208	1	13.5/ --	18.1	30	133	164/98	1,2,3,4,5
CU-K25	FCU-K25	LG / LUU247HV	2.0	24	17/12	27.0	10.0	208	1	13.5/ --	18.1	30	133	164/98	1,2,3,4,5
CU-K26	FCU-K26	LG / LUU247HV	2.0	24	17/12	27.0	10.0	208	1	13.5/ --	18.1	30	133	164/98	1,2,3,4,5
CU-K27	FCU-K27	LG / LUU247HV	2.0	24	17/12	27.0	10.0	208	1	13.5/ --	18.1	30	133	164/98	1,2,3,4,5
CU-K28	FCU-K28	LG / LUU247HV	2.0	24	17/12	27.0	10.0	208	1	13.5/ --	18.1	30	133	164/98	1,2,3,4,5

REMARK:

1. SECURE CONDENSING UNIT ON MIN. 4" HIGH ROOF CURB OR MECHANICAL PLATFORM PROVIDED BY GC.
2. PROVIDE MANUFACTURE DISCONNECT SWITCH AND INTERLOCK WITH CORRESPONDING FAN COIL UNIT FOR OPERATION.
3. PROVIDE MIN. 1" INSULATION TO BOTH REFRIGERANT GAS AND LIQUID PIPES WITH ALUMINUM JACKETING FOR OUTDOOR APPLICATION.
4. INSTALL UNIT TO PROVIDE ALL CLEARANCES PER MANUFACTURER REQUIREMENTS.
5. TOTAL MAXIMUM REFRIGERANT PIPE IN LENGTH AND ELEVATION DIFFERENCE SHALL NOT EXCEED FACTORY INSTALLATION LIMITS. SEE INSTALLATION MANUAL FOR DETAILED REQUIREMENTS.

SPLIT HEAT PUMP NOMINAL FAN COIL UNIT SCHEDULES

TAG	SERVED BY	BRAND / MODEL	CAPACITY (MBH)		CFM			E.S.P. (IN.W.G.)	ELECTRICAL					WEIGHT (LBS)	MAX. PIPE LENGTH / ELEV. DIFFERENCE (FT)	REMARK
			COOLING	HEATING	MAX	MID	MIN		VOLTS	HERTZ	PHASE	HP	FLA			
FCU-K1	CU-K1	LG/ LHN247HV	24	27	688	618	530	0.39	208	60	1	N/A	0.6	73	164/98	1,2,3,4,5,6,7
FCU-K2	CU-K2	LG/ LHN247HV	24	27	688	618	530	0.39	208	60	1	N/A	0.6	73	164/98	1,2,3,4,5,6,7
FCU-K3	CU-K3	LG/ LHN247HV	24	27	688	618	530	0.39	208	60	1	N/A	0.6	73	164/98	1,2,3,4,5,6,7
FCU-K4	CU-K4	LG/ LHN247HV	24	27	688	618	530	0.39	208	60	1	N/A	0.6	73	164/98	1,2,3,4,5,6,7
FCU-K5	CU-K5	LG/ LHN247HV	24	27	688	618	530	0.39	208	60	1	N/A	0.6	73	164/98	1,2,3,4,5,6,7
FCU-K6	CU-K6	LG/ LHN247HV	24	27	688	618	530	0.39	208	60	1	N/A	0.6	73	164/98	1,2,3,4,5,6,7
FCU-K7	CU-K7	LG/ LHN247HV	24	27	688	618	530	0.39	208	60	1	N/A	0.6	73	164/98	1,2,3,4,5,6,7
FCU-K8	CU-K8	LG/ LHN247HV	24	27	688	618	530	0.39	208	60	1	N/A	0.6	73	164/98	1,2,3,4,5,6,7
FCU-K9	CU-K9	LG/ LHN247HV	24	27	688	618	530	0.39	208	60	1	N/A	0.6	73	164/98	1,2,3,4,5,6,7
FCU-K10	CU-K10	LG/ LHN247HV	24	27	688	618	530	0.39	208	60	1	N/A	0.6	73	164/98	1,2,3,4,5,6,7
FCU-K11	CU-K11	LG/ LHN247HV	24	27	688	618	530	0.39	208	60	1	N/A	0.6	73	164/98	1,2,3,4,5,6,7
FCU-K12	CU-K12	LG/ LHN247HV	24	27	688	618	530	0.39	208	60	1	N/A	0.6	73	164/98	1,2,3,4,5,6,7
FCU-K13	CU-K13	LG/ LHN247HV	24	27	688	618	530	0.39	208	60	1	N/A	0.6	73	164/98	1,2,3,4,5,6,7
FCU-K14	CU-K14	LG/ LHN247HV	24	27	688	618	530	0.39	208	60	1	N/A	0.6	73	164/98	1,2,3,4,5,6,7
FCU-K15	CU-K15	LG/ LHN247HV	24	27	688	618	530	0.39	208	60	1	N/A	0.6	73	164/98	1,2,3,4,5,6,7
FCU-K16	CU-K16	LG/ LHN247HV	24	27	688	618	530	0.39	208	60	1	N/A	0.6	73	164/98	1,2,3,4,5,6,7
FCU-K17	CU-K17	LG/ LHN247HV	24	27	688	618	530	0.39	208	60	1	N/A	0.6	73	164/98	1,2,3,4,5,6,7
FCU-K18	CU-K18	LG/ LHN247HV	24	27	688	618	530	0.39	208	60	1	N/A	0.6	73	164/98	1,2,3,4,5,6,7
FCU-K19	CU-K19	LG/ LHN247HV	24	27	688	618	530	0.39	208	60	1	N/A	0.6	73	164/98	1,2,3,4,5,6,7
FCU-K20	CU-K20	LG/ LHN247HV	24	27	688	618	530	0.39	208	60	1	N/A	0.6	73	164/98	1,2,3,4,5,6,7
FCU-K21	CU-K21	LG/ LHN247HV	24	27	688	618	530	0.39	208	60	1	N/A	0.6	73	164/98	1,2,3,4,5,6,7
FCU-K22	CU-K22	LG/ LHN247HV	24	27	688	618	530	0.39	208	60	1	N/A	0.6	73	164/98	1,2,3,4,5,6,7
FCU-K23	CU-K23	LG/ LHN247HV	24	27	688	618	530	0.39	208	60	1	N/A	0.6	73	164/98	1,2,3,4,5,6,7
FCU-K24	CU-K24	LG/ LHN247HV	24	27	688	618	530	0.39	208	60	1	N/A	0.6	73	164/98	1,2,3,4,5,6,7
FCU-K25	CU-K25	LG/ LHN247HV	24	27	688	618	530	0.39	208	60	1	N/A	0.6	73	164/98	1,2,3,4,5,6,7
FCU-K26	CU-K26	LG/ LHN247HV	24	27	688	618	530	0.39	208	60	1	N/A	0.6	73	164/98	1,2,3,4,5,6,7
FCU-K27	CU-K27	LG/ LHN247HV	24	27	688	618	530	0.39	208	60	1	N/A	0.6	73	164/98	1,2,3,4,5,6,7
FCU-K28	CU-K28	LG/ LHN247HV	24	27	688	618	530	0.39	208	60	1	N/A	0.6	73	164/98	1,2,3,4,5,6,7

REMARK:

1. INSTALL UNIT TO MEET MANUFACTURER CLEARANCE REQUIREMENTS.
2. PROVIDE ¾"Ø CONDENSATE DRAIN WITH AIR VENT PER PLAN. MAXIMUM LIFT OF CONDENSATE SHALL NOT EXCEED FACTORY INSTALLATION LIMITS. SEE INSTALLATION MANUAL FOR DETAILED REQUIREMENTS.
3. PROVIDE FACTORY 24/7 PROGRAMMABLE THERMOSTAT
4. PROVIDE MIN. 1" INSULATION TO BOTH REFRIGERANT GAS AND LIQUID PIPES ALSO PROVIDE ALUMINUM JACKETING FOR OUTDOOR APPLICATION.
5. TOTAL MAXIMUM REFRIGERANT PIPE IN LENGTH AND ELEVATION DIFFERENCE SHALL NOT EXCEED FACTORY INSTALLATION LIMITS. SEE INSTALLATION MANUAL FOR DETAILED REQUIREMENTS.
6. PROVIDE OVERFLOW SWITCH THAT SHUTS DOWN THE UNIT AUTOMATICALLY WHEN SWITCH IS TRIGGER.
7. PROVIDE 24"X24"X2" FILTER BOX FOR MERV-13 FILTER ON TOP OF CEILING RETURN AIR GRILLE.

CO-AR DESIGN, INC.
680 Brea Canyon Rd., Ste. 178
Diamond Bar, CA 91789

Office: 909-598-0186
http:\\www.coardesign.com

Dennis J. Lee, Architect
dennisl@coardesign.com

THESE DRAWINGS ARE THE PROPERTY OF THE ARCHITECT. THE DESIGNS SHOWN AND DESCRIBED HERIN INCLUDING ALL TECHNICAL DRAWINGS ARE PROPRIETARY AND CANNOT BE COPIED, DUPLICATED OR COMMERCIALLY EXPLOITED, IN WHOLE OR IN PART. THE DRAWINGS AND SPECIFICATIONS SHALL NOT BE USED BY THE OWNER ON OTHER PROJECTS, FOR ADDITIONS TO THIS PROJECT, OR FOR COMPLETION OF THIS PROJECT BY OTHERS. THE OWNER AGREES TO HOLD HARMLESS, INDEMNIFY AND DEFEND THE ARCHITECT AGAINST ALL DAMAGES, CLAIMS AND LOSSES, INCLUDING DEFENSE COSTS, ARISING OUT OF ANY REUSE OF THE PLANS AND SPECIFICATIONS WITHOUT THE WRITTEN AUTHORIZATION OF THE ARCHITECT OF RECORD.

COPYRIGHT © 2022 CO-AR DESIGN, INC., ALL RIGHTS RESERVED.

SEAL

REGISTERED PROFESSIONAL ENGINEER
JIA HUI PAN
M35374
EXP. 6/30/23
MECHANICAL
STATE OF CALIFORNIA

NOTES

JHP Engineering and Design Services Inc.
3103 Independence Drive
Livermore, CA 94551
TEL: 925-409-2508
CEL: 510-468-0613
FAX: 510-788-6039

PROJECT

SALTALK FREMONT KITCHEN TENANT IMPROVEMENT

42550 ALBRAE ST.,
FREMONT, CA 94538

CLIENT

SALTALK, INC.
3334 VICTOR CT.,
SANTA CLARA, CA 95054

SUBMITTALS/ REVISIONS

1	HEALTH/USD SUBMITTAL	04/01/2022
2	2ND BLD SUBMITTAL	07/22/2022
3	3RD BLD. SUBMITTAL	08/30/2022
4	3RD USD. SUBMITTAL	09/01/2022
5	2ND HEALTH SUBMITTAL	09/29/2022

PROJECT NO.	21127
SCALE	AS SHOWN
DATE:	2/10/2022
DRAWN BY	TL / YC
CHECKED BY	JP

SHEET TITLE

MECHANICAL EQUIPMENT SCHEDULE

SHEET NO

M-0.3

BIMcloud: COAR CONFERENCE - BIMcloud Basic for ARCHICAD 25/202201 Fremont-Ghost Kitchen Thursday, February 10, 2022 1:47 PM

KITCHEN EXHAUST FAN SCHEDULE

TAG	MAKE/MODEL	CFM	ESP	FRPM	ELECTRICAL DATA						COOKING EQUIPMENT SERVED	EQUIPMENT INTERLOCKED	UL LISTING	FAN DISCHARGE CONFIG.	DIRECTION OF FAN ROTATION	WEIGHT (LBS)	REMARK
					VOLTS	Ø	BHP	ENCL.	FLA	HP							
KEF-K1	CAPTIVEAIRE/ USBI18DD-RM	3,000	2.000	1,411	208	3	1.6240	ODP, PREMIUM	9.5	3.000	KITCHEN HOOD-K1	MAU-K1	UL762	1538 FPM	CW	448	1,3,4,5
KEF-K2	CAPTIVEAIRE/ USBI18DD-RM	3,000	2.000	1,411	208	3	1.6240	ODP, PREMIUM	9.5	3.000	KITCHEN HOOD-K2	MAU-K2	UL762	1538 FPM	CW	448	1,3,4,5
KEF-K3	CAPTIVEAIRE/ DU180HFA	3,000	1.500	1,305	208	3	1.5910	ODP, PREMIUM	9.5	3.000	KITCHEN HOOD-K3	MAU-K3	UL762	693 FPM	CW	229	1,2,3,4
KEF-K4	CAPTIVEAIRE/ USBI18DD-RM	3,000	2.000	1,411	208	3	1.6240	ODP, PREMIUM	9.5	3.000	KITCHEN HOOD-K4	MAU-K4	UL762	1538 FPM	CW	448	1,3,4,5
KEF-K5	CAPTIVEAIRE/ USBI18DD-RM	3,000	2.000	1,411	208	3	1.6240	ODP, PREMIUM	9.5	3.000	KITCHEN HOOD-K5	MAU-K5	UL762	1538 FPM	CW	448	1,3,4,5
KEF-K6	CAPTIVEAIRE/ USBI18DD-RM	3,000	2.000	1,411	208	3	1.6240	ODP, PREMIUM	9.5	3.000	KITCHEN HOOD-K6	MAU-K6	UL762	1538 FPM	CW	448	1,3,4,5
KEF-K7	CAPTIVEAIRE/ USBI18DD-RM	3,000	2.000	1,411	208	3	1.6240	ODP, PREMIUM	9.5	3.000	KITCHEN HOOD-K7	MAU-K7	UL762	1538 FPM	CW	448	1,3,4,5
KEF-K8	CAPTIVEAIRE/ USBI18DD-RM	3,000	2.000	1,411	208	3	1.6240	ODP, PREMIUM	9.5	3.000	KITCHEN HOOD-K8	MAU-K8	UL762	1538 FPM	CW	448	1,3,4,5
KEF-K9	CAPTIVEAIRE/ USBI18DD-RM	3,000	2.000	1,411	208	3	1.6240	ODP, PREMIUM	9.5	3.000	KITCHEN HOOD-K9	MAU-K9	UL762	1538 FPM	CW	448	1,3,4,5
KEF-K10	CAPTIVEAIRE/ DU180HFA	3,000	1.500	1,305	208	3	1.5910	ODP, PREMIUM	9.5	3.000	KITCHEN HOOD-K10	MAU-K10	UL762	693 FPM	CW	229	1,2,3,4
KEF-K11	CAPTIVEAIRE/ DU180HFA	3,000	1.500	1,305	208	3	1.5910	ODP, PREMIUM	9.5	3.000	KITCHEN HOOD-K11	MAU-K11	UL762	693 FPM	CW	229	1,2,3,4
KEF-K12	CAPTIVEAIRE/ DU180HFA	3,000	1.500	1,305	208	3	1.5910	ODP, PREMIUM	9.5	3.000	KITCHEN HOOD-K12	MAU-K12	UL762	693 FPM	CW	229	1,2,3,4
KEF-K13	CAPTIVEAIRE/ DU180HFA	3,000	1.500	1,305	208	3	1.5910	ODP, PREMIUM	9.5	3.000	KITCHEN HOOD-K13	MAU-K13	UL762	693 FPM	CW	229	1,2,3,4
KEF-K14	CAPTIVEAIRE/ DU180HFA	3,000	1.500	1,305	208	3	1.5910	ODP, PREMIUM	9.5	3.000	KITCHEN HOOD-K14	MAU-K14	UL762	693 FPM	CW	229	1,2,3,4
KEF-K15	CAPTIVEAIRE/ DU180HFA	3,000	1.500	1,305	208	3	1.5910	ODP, PREMIUM	9.5	3.000	KITCHEN HOOD-K15	MAU-K15	UL762	693 FPM	CW	229	1,2,3,4
KEF-K16	CAPTIVEAIRE/ DU180HFA	3,000	1.500	1,305	208	3	1.5910	ODP, PREMIUM	9.5	3.000	KITCHEN HOOD-K16	MAU-K16	UL762	693 FPM	CW	229	1,2,3,4
KEF-K17	CAPTIVEAIRE/ DU180HFA	3,000	1.500	1,305	208	3	1.5910	ODP, PREMIUM	9.5	3.000	KITCHEN HOOD-K17	MAU-K17	UL762	693 FPM	CW	229	1,2,3,4
KEF-K18	CAPTIVEAIRE/ DU180HFA	3,000	1.500	1,305	208	3	1.5910	ODP, PREMIUM	9.5	3.000	KITCHEN HOOD-K18	MAU-K18	UL762	693 FPM	CW	229	1,2,3,4
KEF-K19	CAPTIVEAIRE/ DU180HFA	3,000	1.500	1,305	208	3	1.5910	ODP, PREMIUM	9.5	3.000	KITCHEN HOOD-K19	MAU-K19	UL762	693 FPM	CW	229	1,2,3,4
KEF-K20	CAPTIVEAIRE/ DU180HFA	3,000	1.500	1,305	208	3	1.5910	ODP, PREMIUM	9.5	3.000	KITCHEN HOOD-K20	MAU-K10	UL762	693 FPM	CW	229	1,2,3,4
KEF-K21	CAPTIVEAIRE/ DU180HFA	3,000	1.500	1,305	208	3	1.5910	ODP, PREMIUM	9.5	3.000	KITCHEN HOOD-K21	MAU-K21	UL762	693 FPM	CW	229	1,2,3,4
KEF-K22	CAPTIVEAIRE/ DU180HFA	3,000	1.500	1,305	208	3	1.5910	ODP, PREMIUM	9.5	3.000	KITCHEN HOOD-K22	MAU-K22	UL762	693 FPM	CW	229	1,2,3,4
KEF-K23	CAPTIVEAIRE/ DU180HFA	3,000	1.500	1,305	208	3	1.5910	ODP, PREMIUM	9.5	3.000	KITCHEN HOOD-K23	MAU-K23	UL762	693 FPM	CW	229	1,2,3,4
KEF-K24	CAPTIVEAIRE/ DU240HFA	3,500	1.500	863	208	3	1.7880	ODP, PREMIUM	10.2	3.000	KITCHEN HOOD-K24	MAU-K24	UL762	795 FPM	CW	357	1,2,3,4
KEF-K25	CAPTIVEAIRE/ USBI18DD-RM	3,000	2.000	1,411	208	3	1.6240	ODP, PREMIUM	9.5	3.000	KITCHEN HOOD-K25	MAU-K25	UL762	1538 FPM	CW	448	1,3,4,5
KEF-K26	CAPTIVEAIRE/ USBI18DD-RM	3,000	2.000	1,411	208	3	1.6240	ODP, PREMIUM	9.5	3.000	KITCHEN HOOD-K26	MAU-K26	UL762	1538 FPM	CW	448	1,3,4,5
KEF-K27	CAPTIVEAIRE/ USBI18DD-RM	3,000	2.000	1,411	208	3	1.6240	ODP, PREMIUM	9.5	3.000	KITCHEN HOOD-K27	MAU-K27	UL762	1538 FPM	CW	448	1,3,4,5
KEF-K28	CAPTIVEAIRE/ USBI18DD-RM	3,500	2.000	1499	208	3	1.9880	ODP, PREMIUM	9.5	3.000	KITCHEN HOOD-K28	MAU-K28	UL762	1794 FPM	CW	448	1,3,4,5

4

REMARK:

1. PROVIDE EQUIPMENT AS SCHEDULED OR APPROVE EQUAL.
2. FURNISH AND INSTALL FAN WITH FOLLOWING FACTORY ACCESSORIES:
   A. DIRECT DRIVE FAN WITH SPEED CONTROLLER
   B. NEMA-3R DISCONNECT SWITCH
   C. FACTORY VENTILATED ROOF CURB AND CURB EXTENSION.
   D. HINGED BRACKET KIT FOR DUCT CLEANING
   E. GREASE TRAP WITH ABSORBENT MATERIAL
   F. ALUMINUM BIRD-SCREEN
   G. HEAT BAFFLE
   H. CLEAN-OUT PORT
   I. FACTORY INSTALLED SPEED CONTROLLER.
3. EXHAUST FAN AND ASSOCIATED INTERLOCKED MAKE-UP AIR UNIT SHALL BE CONTROLLED BY FACTORY ON/OFF CONTROL PANEL DURING NORMAL OPERATING CONDITION. COORDINATE WITH OWNER AND ELECTRICAL CONTRACTOR FOR CONTROL PANEL AND SWITCH LOCATION. 4
4. INSTALL EXHAUST FAN TO MAINTAIN ACCESS AND MAINTENANCE CLEARANCES PER MANUFACTURE'S REQUIREMENT.
5. FURNISH AND INSTALL FAN WITH FOLLOWING FACTORY ACCESSORIES:
   A. BACKWARD INCLINED FAN BLOWER
   B. FACTORY DIRECT DRIVE VFD CONTROL PACKAGE
   C. SPRING VIBRATION ISOLATORS FOR OUTDOOR APPLICATIONS.
   D. GREASE TRAP WITH ABSORBENT MATERIAL
   E. INLET FLANGE
   F. DISCHARGE EXTENSION
   G. BOLTED FAN ACCESS
   H. BOTTOM DRAIN OUTLET WITH PLUG

KITCHEN MAKE-UP AIR UNIT SCHEDULE

TAG	AREA SERVED	MAKE/MODEL	BLOWER	CFM	ESP	ELECTRICAL					WATER / DRAIN CONNECTION	INTERLOCK EQUIPMENT	WEIGHT	REMARK
						VOLTS	Ø	FLA	RPM	HP				
MAU-K1	K1	CAPTIVEAIRE/ A2-20D	20MF-2-MOD	3,000	1.000	208	3	8.3	1,363	2.000	½"Ø / 1½"Ø	KEF-K1	646	1,2,3,4
MAU-K2	K2	CAPTIVEAIRE/ A2-20D	20MF-2-MOD	3,000	1.000	208	3	8.3	1,363	2.000	½"Ø / 1½"Ø	KEF-K2	646	1,2,3,4
MAU-K3	K3	CAPTIVEAIRE/ A2-20D	20MF-2-MOD	3,000	0.500	208	3	8.3	1,192	2.000	½"Ø / 1½"Ø	KEF-K3	646	1,2,3,4
MAU-K4	K4	CAPTIVEAIRE/ A2-20D	20MF-2-MOD	3,000	1.000	208	3	8.3	1,363	2.000	½"Ø / 1½"Ø	KEF-K4	646	1,2,3,4
MAU-K5	K5	CAPTIVEAIRE/ A2-20D	20MF-2-MOD	3,000	1.000	208	3	8.3	1,363	2.000	½"Ø / 1½"Ø	KEF-K5	646	1,2,3,4
MAU-K6	K6	CAPTIVEAIRE/ A2-20D	20MF-2-MOD	3,000	1.000	208	3	8.3	1,363	2.000	½"Ø / 1½"Ø	KEF-K6	646	1,2,3,4
MAU-K7	K7	CAPTIVEAIRE/ A2-20D	20MF-2-MOD	3,000	1.000	208	3	8.3	1,363	2.000	½"Ø / 1½"Ø	KEF-K7	646	1,2,3,4
MAU-K8	K8	CAPTIVEAIRE/ A2-20D	20MF-2-MOD	3,000	1.000	208	3	8.3	1,363	2.000	½"Ø / 1½"Ø	KEF-K8	646	1,2,3,4
MAU-K9	K9	CAPTIVEAIRE/ A2-20D	20MF-2-MOD	3,000	1.000	208	3	8.3	1,363	2.000	½"Ø / 1½"Ø	KEF-K9	646	1,2,3,4
MAU-K10	K10	CAPTIVEAIRE/ A2-20D	20MF-2-MOD	3,000	0.500	208	3	8.3	1,192	2.000	½"Ø / 1½"Ø	KEF-K10	646	1,2,3,4
MAU-K11	K11	CAPTIVEAIRE/ A2-20D	20MF-2-MOD	3,000	0.500	208	3	8.3	1,192	2.000	½"Ø / 1½"Ø	KEF-K11	646	1,2,3,4
MAU-K12	K12	CAPTIVEAIRE/ A2-20D	20MF-2-MOD	3,000	0.500	208	3	8.3	1,192	2.000	½"Ø / 1½"Ø	KEF-K12	646	1,2,3,4
MAU-K13	K13	CAPTIVEAIRE/ A2-20D	20MF-2-MOD	3,000	0.500	208	3	8.3	1,192	2.000	½"Ø / 1½"Ø	KEF-K13	646	1,2,3,4
MAU-K14	K14	CAPTIVEAIRE/ A2-20D	20MF-2-MOD	3,000	0.500	208	3	8.3	1,192	2.000	½"Ø / 1½"Ø	KEF-K14	646	1,2,3,4
MAU-K15	K15	CAPTIVEAIRE/ A2-20D	20MF-2-MOD	3,000	0.500	208	3	8.3	1,192	2.000	½"Ø / 1½"Ø	KEF-K15	646	1,2,3,4
MAU-K16	K16	CAPTIVEAIRE/ A2-20D	20MF-2-MOD	3,000	0.500	208	3	8.3	1,192	2.000	½"Ø / 1½"Ø	KEF-K16	646	1,2,3,4
MAU-K17	K17	CAPTIVEAIRE/ A2-20D	20MF-2-MOD	3,000	0.500	208	3	8.3	1,192	2.000	½"Ø / 1½"Ø	KEF-K17	646	1,2,3,4
MAU-K18	K18	CAPTIVEAIRE/ A2-20D	20MF-2-MOD	3,000	0.500	208	3	8.3	1,192	2.000	½"Ø / 1½"Ø	KEF-K18	646	1,2,3,4
MAU-K19	K19	CAPTIVEAIRE/ A2-20D	20MF-2-MOD	3,000	0.500	208	3	8.3	1,192	2.000	½"Ø / 1½"Ø	KEF-K19	646	1,2,3,4
MAU-K20	K20	CAPTIVEAIRE/ A2-20D	20MF-2-MOD	3,000	0.500	208	3	8.3	1,192	2.000	½"Ø / 1½"Ø	KEF-K20	646	1,2,3,4
MAU-K21	K21	CAPTIVEAIRE/ A2-20D	20MF-2-MOD	3,000	0.500	208	3	8.3	1,192	2.000	½"Ø / 1½"Ø	KEF-K21	646	1,2,3,4
MAU-K22	K22	CAPTIVEAIRE/ A2-20D	20MF-2-MOD	3,000	0.500	208	3	8.3	1,192	2.000	½"Ø / 1½"Ø	KEF-K22	646	1,2,3,4
MAU-K23	K23	CAPTIVEAIRE/ A2-20D	20MF-2-MOD	3,000	0.500	208	3	8.3	1,192	2.000	½"Ø / 1½"Ø	KEF-K23	646	1,2,3,4
MAU-K24	K24	CAPTIVEAIRE/ A2-20D	20MF-2-MOD	3,500	0.500	208	3	9.5	1,331	2.000	½"Ø / 1½"Ø	KEF-K24	646	1,2,3,4
MAU-K25	K25	CAPTIVEAIRE/ A2-20D	20MF-2-MOD	3,000	0.500	208	3	8.3	1,192	2.000	½"Ø / 1½"Ø	KEF-K25	646	1,2,3,4
MAU-K26	K26	CAPTIVEAIRE/ A2-20D	20MF-2-MOD	3,000	0.500	208	3	8.3	1,192	2.000	½"Ø / 1½"Ø	KEF-K26	646	1,2,3,4
MAU-K27	K27	CAPTIVEAIRE/ A2-20D	20MF-2-MOD	3,000	1.000	208	3	8.3	1,363	2.000	½"Ø / 1½"Ø	KEF-K27	646	1,2,3,4
MAU-K28	K28	CAPTIVEAIRE/ A2-20D	20MF-2-MOD	3,500	1.000	208	3	8.3	1,488	2.000	½"Ø / 1½"Ø	KEF-K28	646	1,2,3,4

NOTE: EQUIPMENT IS SELECTED BASED ON ENTERING AIR TEMPERATURE AT 95°F-DB/66°-WB AND LEAVING AIR TEMPERATURE AT 75°F-DB/66°F-WB. 4

REMARK:

1. EXHAUST FAN AND ASSOCIATED INTERLOCKED MAKE-UP AIR UNIT SHALL BE CONTROLLED BY FACTORY DCV CONTROL PANEL DURING NORMAL OPERATING CONDITION. COORDINATE WITH OWNER AND ELECTRICAL CONTRACTOR FOR CONTROL PANEL AND SWITCH LOCATION. SEE KITCHEN EQUIPMENT DRAWING FOR WIRING DETAIL. 4
2. CONTROL SHALL BE WIRED FROM HOOD CONTROL PANEL. SEE KITCHEN EQUIPMENT DRAWING FOR CONTROL WIRING DETAIL.
3. PROVIDE UNIT WITH FOLLOWING MANUFACTURE OPTIONS:
   A. CELDEK EVAPORATOR COOLER
   B. SOLENOID CONTROL VALVE
   C. BACK-DRAFT DAMPER.
   D. FACTORY PUMP KIT, BELT, AND SHEAVES.
   E. DUCT SMOKE DETECTOR.
4. PROVIDE EQUIPMENT AS SCHEDULED OR APPROVE EQUAL.

AIR DIFFUSER AND GRILLE SCHEDULE

TAG	LOCATION	TYPE	BRAND / MODEL	MODULE SIZE	NECK SIZE	REMARK
A	SEE PLAN	CEILING ROUND DIFFUSER	TITUS / TMRA	SEE PLAN	SEE PLAN	1,2,4
B	SEE PLAN	CEILING SUPPLY DIFFUSER	TITUS / PCS	SEE PLAN	SEE PLAN	11344
C	SEE PLAN	SIDEWALL RETURN /EXHAUST AIR GRILLE	TITUS / 350FL	SEE PLAN	SEE PLAN	1,3,4
D	SEE PLAN	CEILING EXHAUST/ RETURN AIR GRILLE	TITUS / PAR	SEE PLAN	SEE PLAN	1,3,4,5

REMARKS:

1. CONTRACTOR TO VERIFY EXACT BORDER TYPE WITH ACTURAL CEILING CONSTRUCTION PRIOR TO ORDER.
2. WHERE A MANUAL VOLUME DAMPER CANNOT BE ACCESS, PROVIDE DIFFUSER WITH FOLLOWING FACTORY ACCESSORIES: INSULATED SUPPLY AIR PLENUM WITH 12" OVAL INLET, CABLE CONTROLLED DAMPER (BRAND/MODEL: YOUNG REGULATOR/800AWO-T-12), STRAIGHT END BORDER AND END CAPS AT EACH END.
3. PROVIDE FACTORY OPPOSED-BLADES DAMPER FOR BALANCING WHERE ACCESS OF MANUAL DAMPER CANNOT BE OBTAINED.
4. ORDER DIFFUSER WITH COLOR TO MATCH CEILING FINISHES. CONFIRM WITH ARCHITECT PRIOR TO ORDER.
5. CONTRACTOR TO PROVIDE MATCH NECK SIZE TAB BOX OR DUCTWORK CONNECT TO DIFFUSER FOR DUCT CONNECTION.

Alameda County
Dept. of Environmental Health
Approved By: T Tran

CO AR

CO-AR DESIGN, INC.
680 Brea Canyon Rd., Ste. 178
Diamond Bar, CA 91789

Office: 909-598-0186
http:\\www.coardesign.com

Dennis J. Lee, Architect
dennisl@coardesign.com

THESE DRAWINGS ARE THE PROPERTY OF THE ARCHITECT. THE DESIGNS SHOWN AND DESCRIBED HERIN INCLUDING ALL TECHNICAL DRAWINGS ARE PROPRIETARY AND CANNOT BE COPIED, DUPLICATED OR COMMERCIALLY EXPLOITED, IN WHOLE OR IN PART. THE DRAWINGS AND SPECIFICATIONS SHALL NOT BE USED BY THE OWNER ON OTHER PROJECTS, FOR ADDITIONS TO THIS PROJECT, OR FOR COMPLETION OF THIS PROJECT BY OTHERS. THE OWNER AGREES TO HOLD HARMLESS, INDEMNIFY AND DEFEND THE ARCHITECT AGAINST ALL DAMAGES, CLAIMS AND LOSSES, INCLUDING DEFENSE COSTS, ARISING OUT OF ANY REUSE OF THE PLANS AND SPECIFICATIONS WITHOUT THE WRITTEN AUTHORIZATION OF THE ARCHITECT OF RECORD.

COPYRIGHT © 2022 CO-AR DESIGN, INC., ALL RIGHTS RESERVED.

SEAL:

REGISTERED PROFESSIONAL ENGINEER
JIA HU PAN
M35374
EXP. 6/30/23
MECHANICAL
STATE OF CALIFORNIA

NOTES:

JHP Engineering and Design Services Inc.
3103 Independence Drive
Livermore, CA 94551
TEL: 925-409-2508
CEL: 510-468-0613
FAX: 510-788-6039

PROJECT:
SALTALK FREMONT KITCHEN TENANT IMPROVEMENT

42550 ALBRAE ST.,
FREMONT, CA 94538

CLIENT:
SALTALK, INC.
3334 VICTOR CT.,
SANTA CLARA, CA 95054

SUBMITTALS/ REVISIONS:

1	HEALTH/USD SUBMITTAL	04/01/2022
2	2ND BLD. SUBMITTAL	07/22/2022
3	3RD BLD. SUBMITTAL	08/30/2022
4	3RD USD. SUBMITTAL	09/01/2022
5	2ND HEALTH SUBMITTAL 4	09/29/2022

PROJECT NO:	21127
SCALE:	AS SHOWN
DATE:	2/10/2022
DRAWN BY:	TL / YC
CHECKED BY:	JP

SHEET TITLE:
MECHANICAL EQUIPMENT SCHEDULE

SHEET NO:
M-0.4

BIMcloud: COAR-CONFERENCE - BIMcloud Basic for ARCHICAD 25/202201-Fremont-Ghost Kitchen Thursday, February 10, 2022 1:47 PM

MIN. OSA AND EXHAUST VENTILATION CALCULATIONS

AREA DESIGNATION	OCCUPANCY CLASSIFICATIONS	OCCUPANT DENSITY (PPL/1000 FT^2)	AREA (A_Z-FT^2)	NO. OF OCC. (P_Z)	PPL OSA RATE (R_P-CFM/PPL)	AREA OSA RATE (R_A-CFM/FT^2)	MIN. REQ'D OSA (V_{bz}-CFM)	DISTRIBUTION EFFECTIVENESS (E_Z)	FINAL REQ'D OSA RATE (V_{OZ}-CFM)	EXHAUST RATE (CFM/FT^2)	REQUIRE EXHAUST AIRFLOW (CFM)	MIN. OSA RATE BASED ON TABLE 120.1-A 2019 ENERGY CODE (CFM/SQ.FT)	MIN. REQ'D AIRFLOW PER TABLE 120.1-A 2019 ENERGY CODE (CFM)	PROVIDED EXHAUST AIRFLOW (CFM)	PROVIDE OSA (CFM)	OSA EQUIPMENT	EA EQUIPMENT
HALLWAY	CORRIDOR	--	2,322	--	--	0.06	140	1.0	140	--	--	0.15	350	--	350	RTU-01	--
RECEIVING	RECEIVING	2	630	2	10	0.12	96	1.0	96	--	--	0.15	95	--	100	RTU-01	--
DINING	DINING	70	1,835	129	7.5	0.18	1,298	1.0	1,298	--	--	0.5	918	--	1,300	RTU-01	--
STORAGE	STORAGE	2	258	1	--	--	--	--	--	1.5	-387	0.15	39	-900	--	RTU-01	TRANSFER
RESTROOM	RESTROOM	--	--	--	--	--	--	--	--	70/ROOM	-280	--	--	-1,200	--	RTU-01	EF-01/EF-02
JANITOR	JANITOR	--	150	--	--	--	--	--	--	1.0	150	--	--	-300	--	RTU-01	EF-03
TOTAL														-2,400	1750	-650(TRANSFER)	

* MIN. OSA VENTILATION IS CALCULATED BASED ON 2019 CMC.
A. SECTION 403.2.1 : $V_{bZ} = R_P \times P_Z + R_A \times A_Z$
B. SECTION 403.2.3 : $V_{OZ} = V_{bZ}/E_Z$
C. TABLE 402.1 AND TABLE 403.2.2
D. TABLE 403.7

BUILDING AIR BALANCE TABLE

EQUIPMENT TAG	QUANTITY	AIR FLOW/ EACH(CFM)	TOTAL AIRFLOW (CFM)	TYPE OF TOTAL AIRFLOW IN CFM				REMARKS
				MAKEUP AIR	OUTSIDE AIR	EXHAUST AIR	RELIEF AIR	
KEF-24 AND KEF-28	2	3,500	7,000			-1,700		--
KEF-1~23/ KEF-25~27	26	3,000	78,000			-78,000		--
MAU-24/ MAU-28	2	3,500	7,000	7,000				--
MAU-1~23/ MAU-25~27	26	3,000	78,000	78,000				--
EF-01~ EF-04	4	600	2,400			-2,400		--
RTU-01	1	1,750	1,750		1,750			--
TOTAL				86,750		-87,400	-650	--

4

Alameda County
Dept. of Environmental Health
Approved By: T. Tran

CO-AR DESIGN, INC.
680 Brea Canyon Rd., Ste. 178
Diamond Bar, CA 91789

Office: 909-598-0186
http:\\www.coardesign.com

Dennis J. Lee, Architect
dennisl@coardesign.com

THESE DRAWINGS ARE THE PROPERTY OF THE ARCHITECT. THE DESIGNS SHOWN AND DESCRIBED HERIN INCLUDING ALL TECHNICAL DRAWINGS ARE PROPRIETARY AND CANNOT BE COPIED, DUPLICATED OR COMMERCIALLY EXPLOITED, IN WHOLE OR IN PART. THE DRAWINGS AND SPECIFICATIONS SHALL NOT BE USED BY THE OWNER ON OTHER PROJECTS, FOR ADDITIONS TO THIS PROJECT, OR FOR COMPLETION OF THIS PROJECT BY OTHERS. THE OWNER AGREES TO HOLD HARMLESS, INDEMNIFY AND DEFEND THE ARCHITECT AGAINST ALL DAMAGES, CLAIMS AND LOSSES, INCLUDING DEFENSE COSTS, ARISING OUT OF ANY REUSE OF THE PLANS AND SPECIFICATIONS WITHOUT THE WRITTEN AUTHORIZATION OF THE ARCHITECT OF RECORD

COPYRIGHT © 2022 CO-AR DESIGN, INC., ALL RIGHTS RESERVED.

SEAL

REGISTERED PROFESSIONAL ENGINEER
JIA HUI PAN
M35374
EXP. 6/30/23
MECHANICAL
STATE OF CALIFORNIA

NOTES

JHP Engineering and Design Services Inc.
3103 Independence Drive
Livermore, CA 94551
TEL: 925-409-2508
CEL: 510-468-0613
FAX: 510-788-6039

PROJECT
SALTALK FREMONT KITCHEN TENANT IMPROVEMENT

42550 ALBRAE ST.,
FREMONT, CA 94538

CLIENT

SALTALK, INC.
3334 VICTOR CT.,
SANTA CLARA, CA 95054

SUBMITTALS/ REVISIONS

1	HEALTH/USD SUBMITTAL	04/01/2022
2	2ND BLD. SUBMITTAL	07/22/2022
3	3RD BLD. SUBMITTAL	08/30/2022
4	3RD USD. SUBMITTAL	09/01/2022
5	2ND HEALTH SUBMITTAL 4	09/29/2022

PROJECT NO:	21127
SCALE:	AS SHOWN
DATE:	2/10/2022
DRAWN BY:	TL / YC
CHECKED BY:	JP

SHEET TITLE
MECHANICAL EQUIPMENT SCHEDULE

SHEET NO
M-0.5

BIMcloud: COAR-CONFERENCE - BIMcloud Basic for ARCHICAD 25/202201-Fremont-Ghost Kitchen Thursday, February 10, 2022 1:47 PM

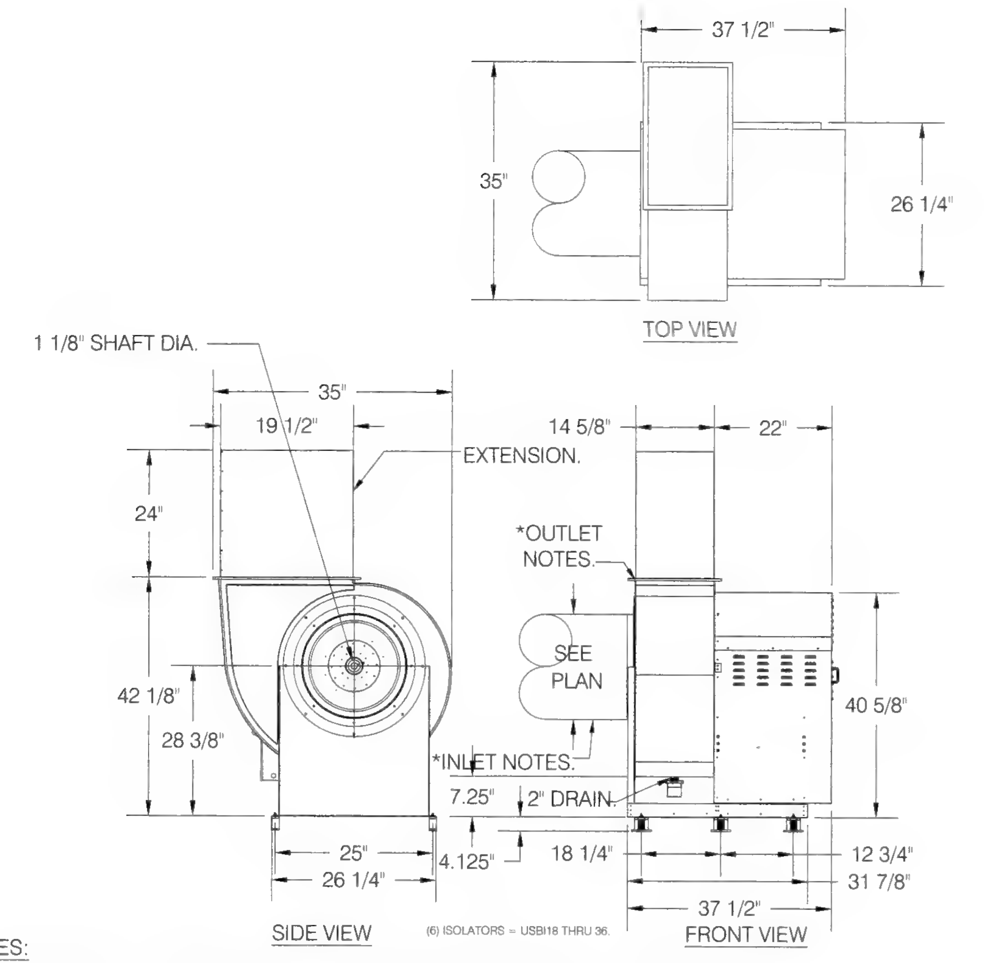

NOTES:
1. ADD EXTENTION AS NEEDED FOR TO MAINTAIN DISCHARGE AT 42" ABOVE ROOF.

1 KITCHEN UTILITY EXHAUST FAN DIMENSIONAL DETAILS
SCALE: N.T.S.
DETAIL APPLES TO: K1,K2,K4,K5,K6,K7,K8,K9,K25,K26,K27,K28

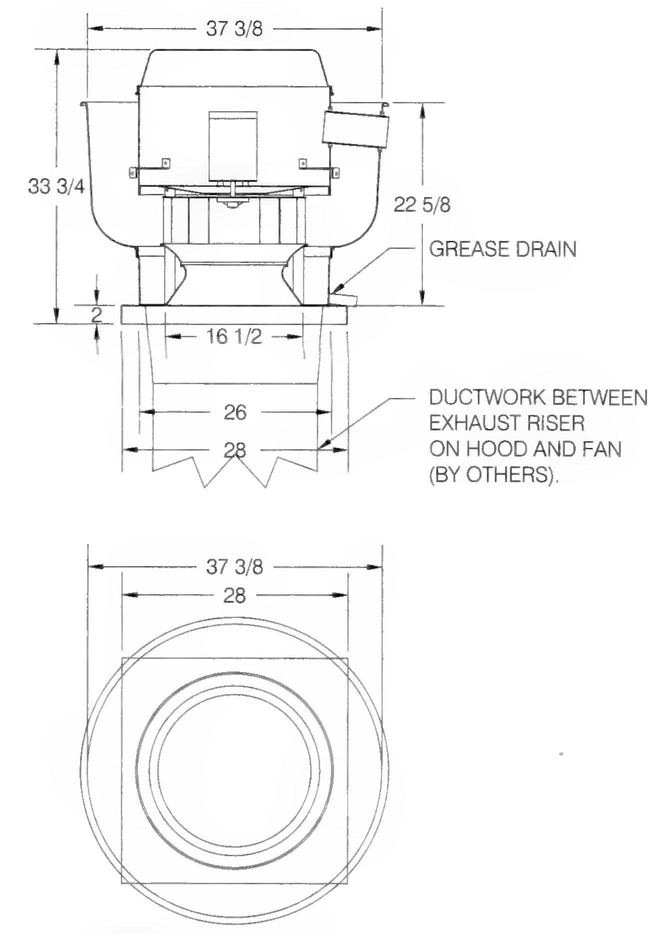

NOTES:
1. ADD EXTENTION AS NEEDED FOR TO MAINTAIN DISCHARGE AT 42" ABOVE ROOF.

2 KITCHEN ROOF MOUNTED EXHAUST FAN DIMENSIONAL DETAILS
SCALE: N.T.S.
DETAIL APPLES TO: K3,K10,K11,K12,K13,K14,K15,K16,K17,K18,K19,K20,K21,K22,K23

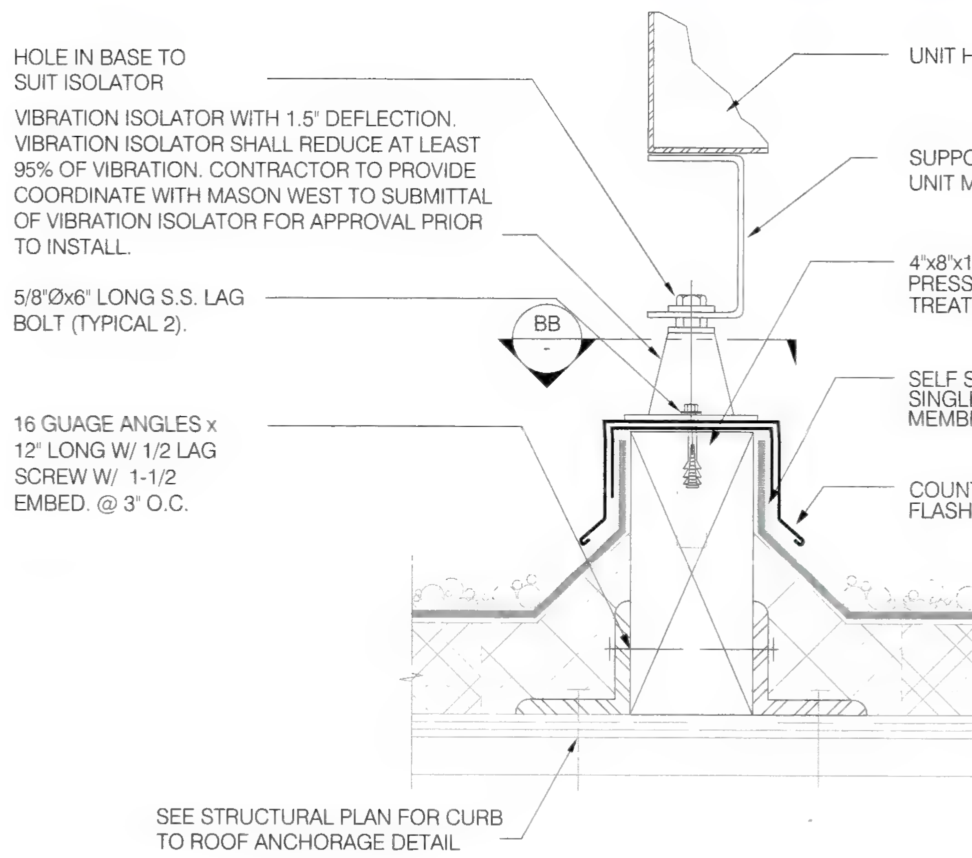

3 KITCHEN EXHAUST FAN SUPPORT DETAIL AND MAKE-UP AIR UNIT TO ROOF CURB ANCHORAGE
SCALE: N.T.S.

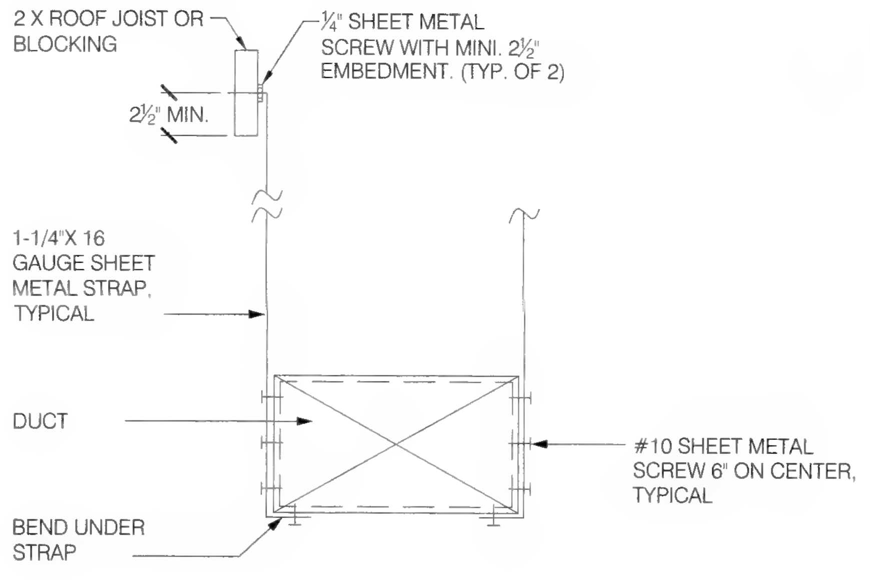

NOTES:
1. REFER TO LATEST SMACNA GUIDELINE FOR HANGING SPACING REQUIREMENT.
2. PROVIDE SWAY & SEISMIC BRACING PER SMACNA SEISMIC GUIDELINES.

4 RECTANGULAR DUCT SUPPORT DETAIL
SCALE: N.T.S.

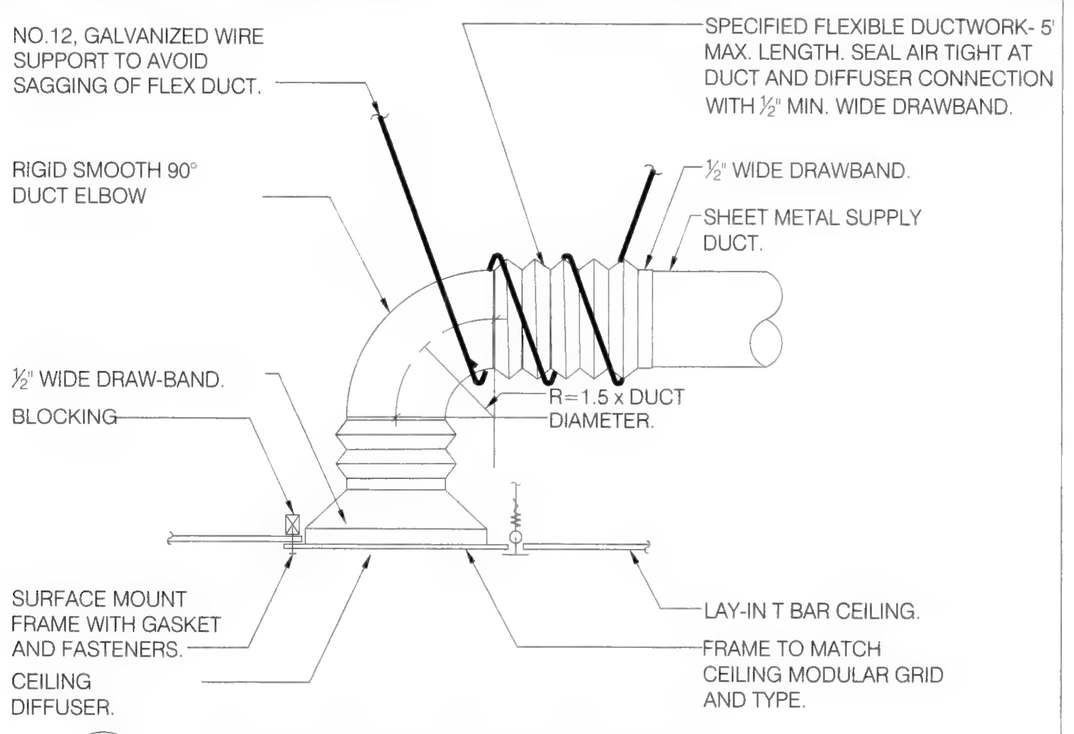

5 CEILING DIFFUSER DETAIL
SCALE: N.T.S.

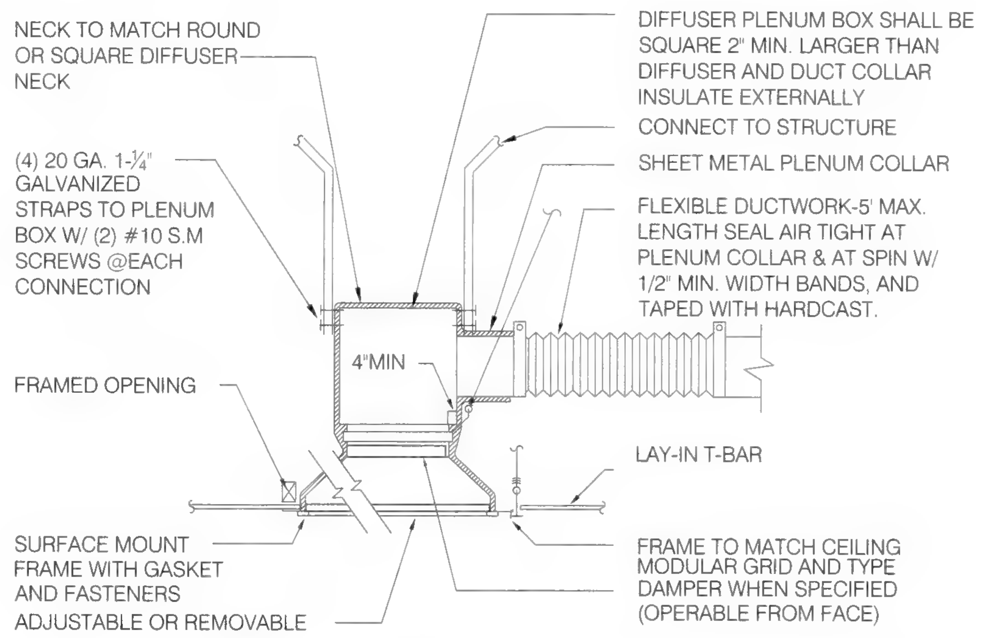

6 ALTERNATE CEILING DIFFUSER DETAIL
SCALE: N.T.S.

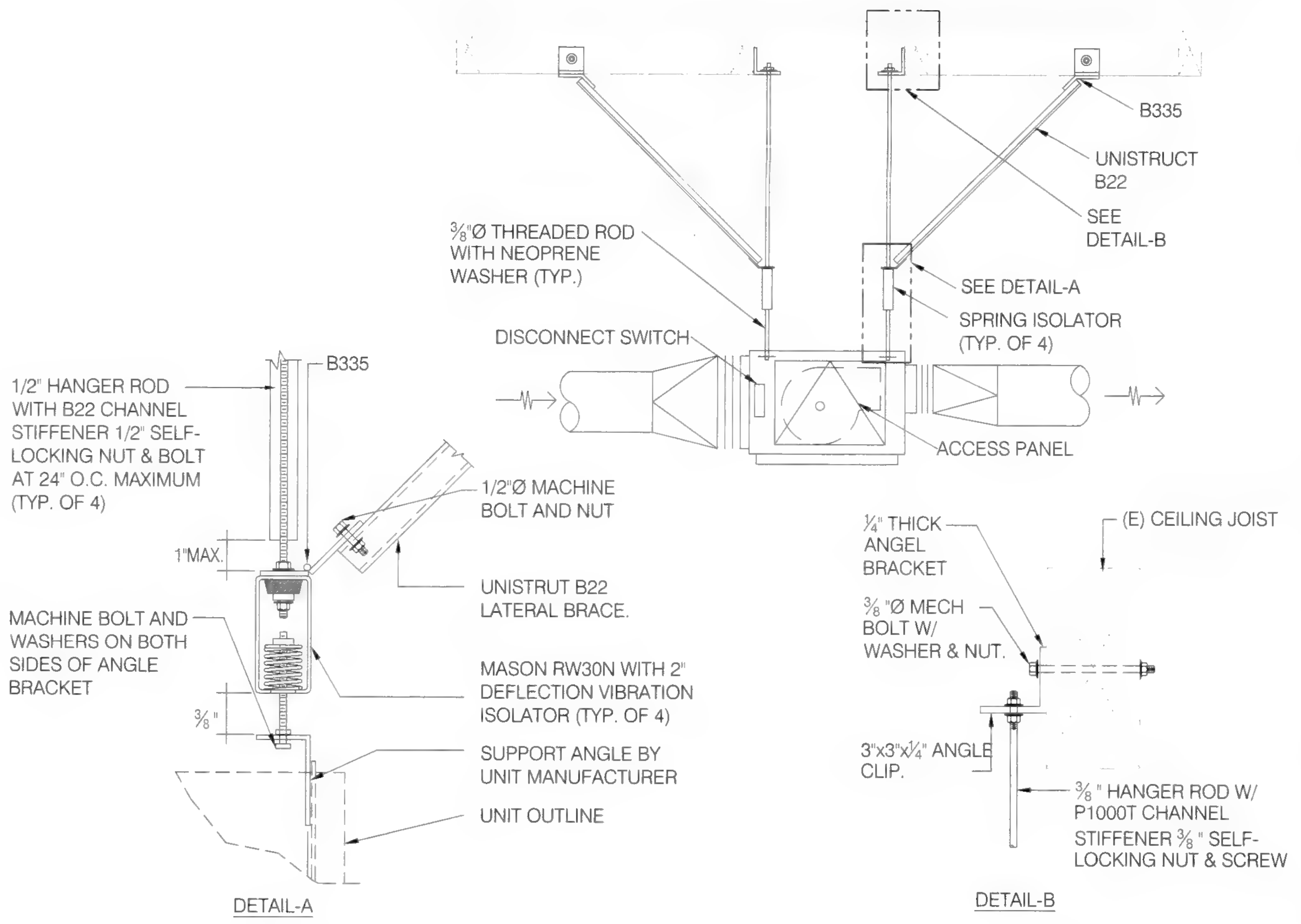

7 IN-LINE EXHAUST FAN MOUNTING DETAILS
SCALE: N.T.S.

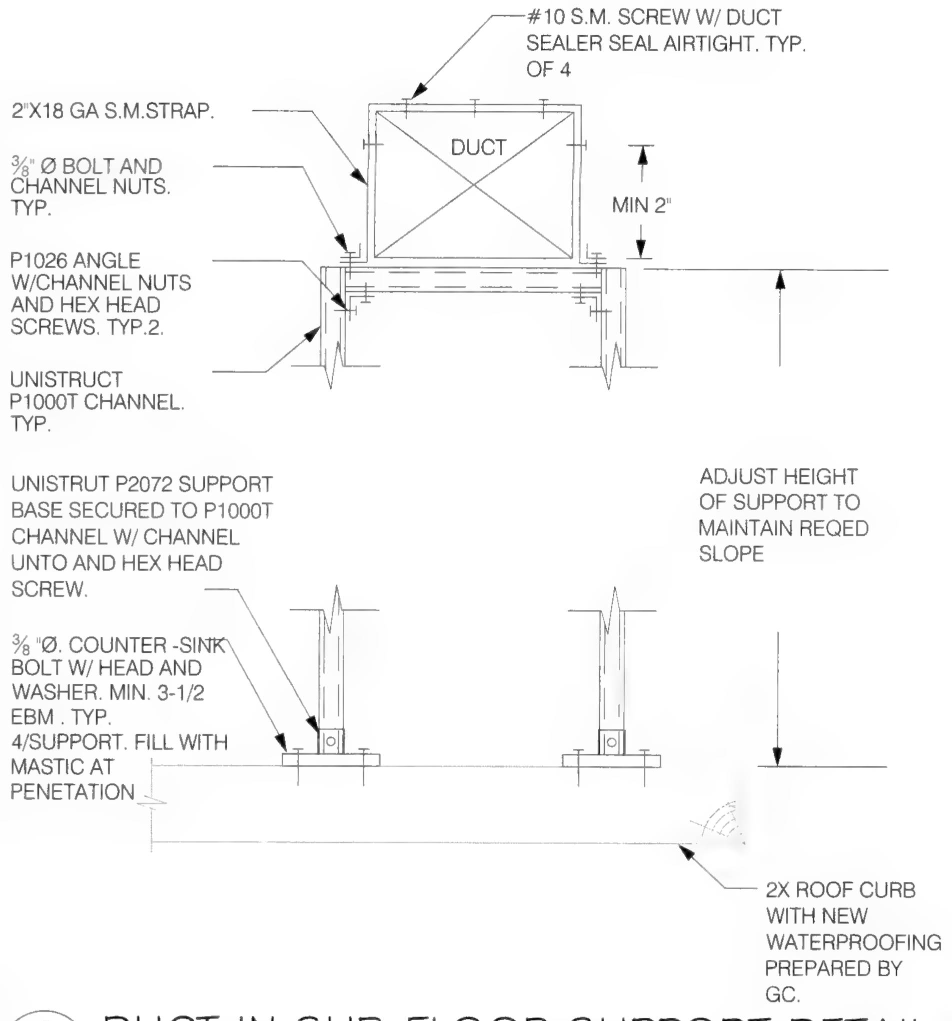

8 DUCT IN SUB-FLOOR SUPPORT DETAIL
SCALE: N.T.S.

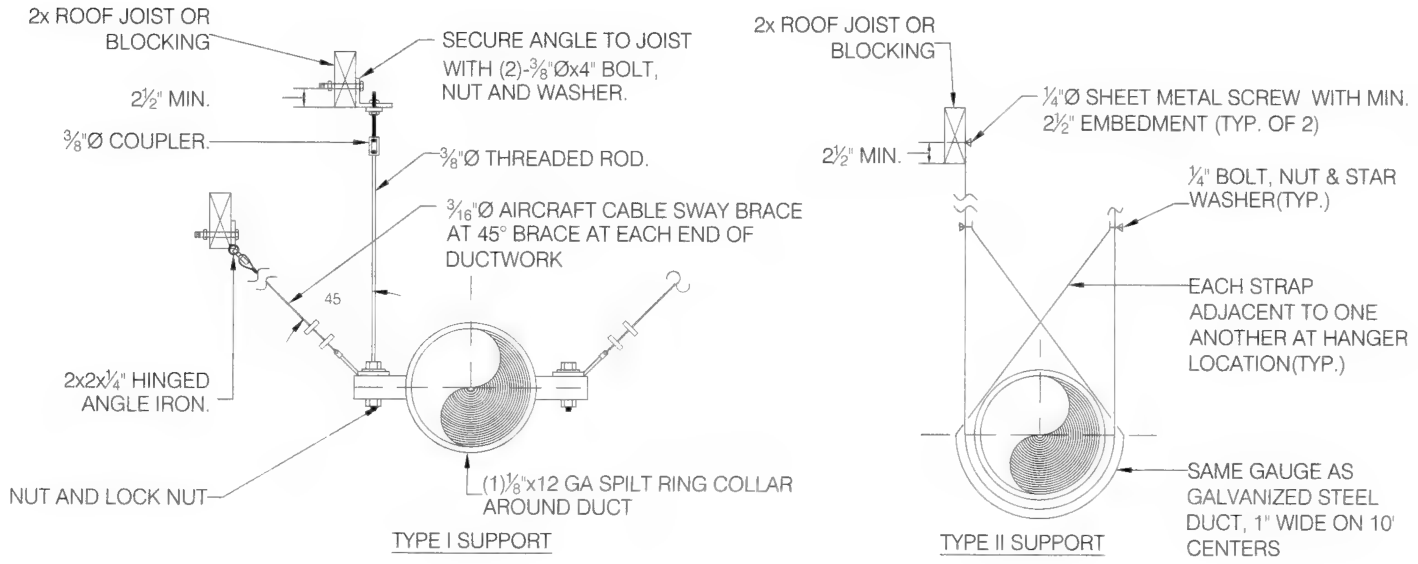

NOTES:
1. APPLY TYPE I DUCT SUPPORT AT EACH END OF SUPPLY AIR MAIN.
2. APPLY TYPE II DUCT SUPPORT AT 10' INTERVAL.
3. REFER TO LATEST SMACNA HVAC STANDARD FOR HANGING SPACING REQUIREMENT FOR DUCTWORK LARGER THAN 30"Ø.
4. PROVIDE SWAY & SEISMIC BRACING PER SMACNA SEISMIC GUIDELINES.
5. HANGER MATERIAL SUPPORTING FLEXIBLE DUCT SHALL IN NO CASE BE LESS THAN 1½" WIDE. FLEXIBLE DUCT SHALL BE SUPPORTED PER MANUFACTURER RECOMMENDED MATERIALS AND AT INTERVAL NO GREATER THAN 4FT. PERMISSIBLE SAG IS MAX ½" PER FOOT OF SPACING BETWEEN SUPPORTS.

9 DUCT SUPPORT DETAIL
SCALE: N.T.S.

Alameda County
Dept. of Environmental Health
Approved By: T. Tran

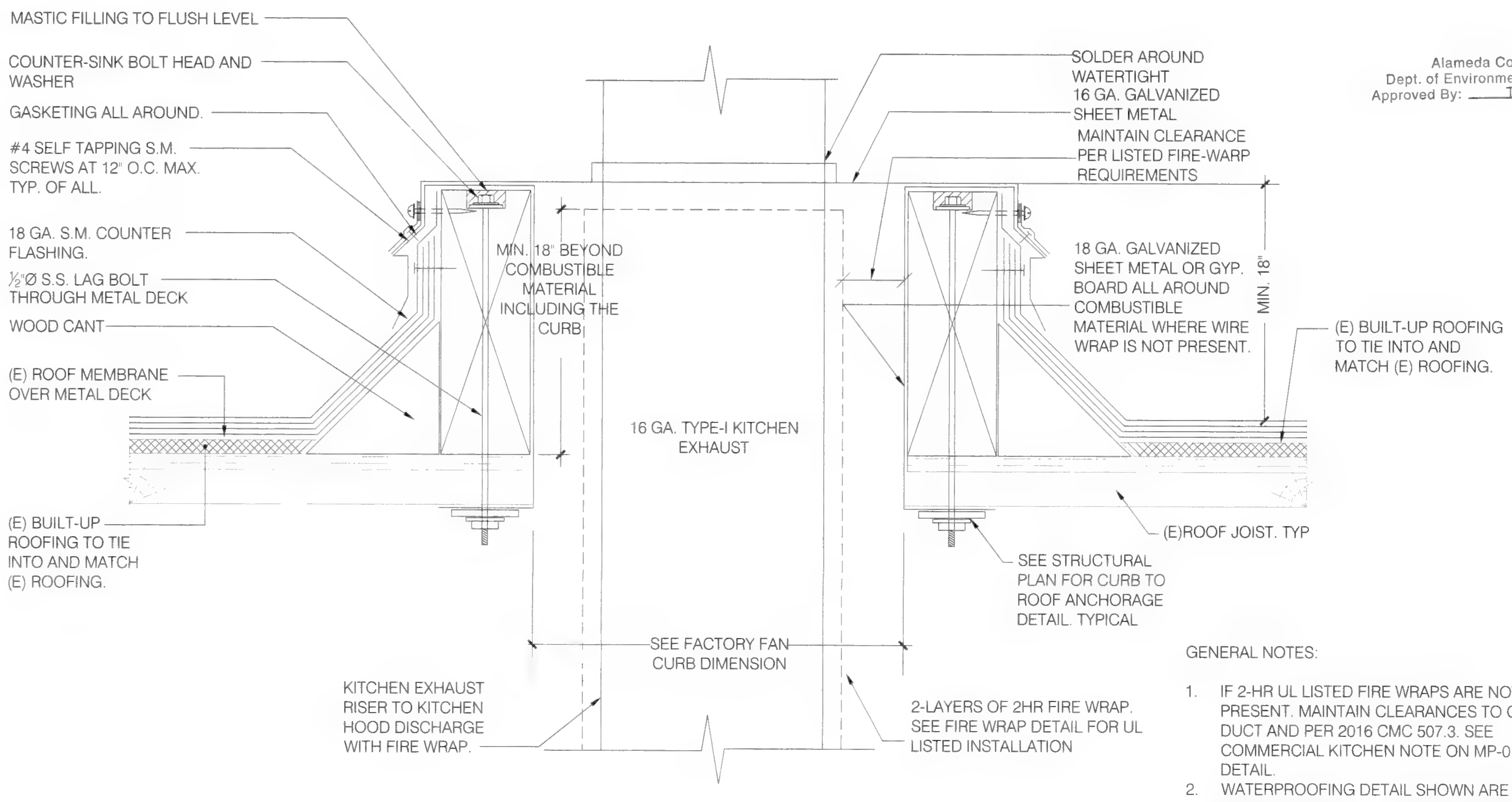

GENERAL NOTES:
1. IF 2-HR UL LISTED FIRE WRAPS ARE NOT PRESENT. MAINTAIN CLEARANCES TO GREASE DUCT AND PER 2016 CMC 507.3. SEE COMMERCIAL KITCHEN NOTE ON MP-0.2 FOR DETAIL.
2. WATERPROOFING DETAIL SHOWN ARE FOR REFERENCE ONLY - NOT FOR CONSTURCTION. CONFIRM WITH ARCHITECT OR ROOFING SPECIALIST OR CONTRACTOR FOR EXACT REQUIREMENT.

10 KITCHEN EXHAUST WITH FIRE WRAP PENETRATING ROOF DETAIL
SCALE: N.T.S.

CO-AR DESIGN, INC.
680 Brea Canyon Rd., Ste. 178
Diamond Bar, CA 91789

Office: 909-598-0186
http:\\www.coardesign.com

Dennis J. Lee, Architect
dennisl@coardesign.com

THESE DRAWINGS ARE THE PROPERTY OF THE ARCHITECT. THE DESIGNS SHOWN AND DESCRIBED HERIN INCLUDING ALL TECHNICAL DRAWINGS ARE PROPRIETARY AND CANNOT BE COPIED, DUPLICATED OR COMMERCIALLY EXPLOITED, IN WHOLE OR IN PART. THE DRAWINGS AND SPECIFICATIONS SHALL NOT BE USED BY THE OWNER ON OTHER PROJECTS, FOR ADDITIONS TO THIS PROJECT, OR FOR COMPLETION OF THIS PROJECT BY OTHERS. THE OWNER AGREES TO HOLD HARMLESS, INDEMNIFY AND DEFEND THE ARCHITECT AGAINST ALL DAMAGES, CLAIMS AND LOSSES, INCLUDING DEFENSE COSTS, ARISING OUT OF ANY REUSE OF THE PLANS AND SPECIFICATIONS WITHOUT THE WRITTEN AUTHORIZATION OF THE ARCHITECT OF RECORD.

COPYRIGHT © 2022 CO-AR DESIGN, INC., ALL RIGHTS RESERVED

SEAL:
REGISTERED PROFESSIONAL ENGINEER
JIA HUI PAN
M35374
EXP. 6/30/23
MECHANICAL
STATE OF CALIFORNIA

NOTES:

JHP Engineering and Design Services Inc.
3103 Independence Drive
Livermore, CA 94551
TEL: 925-409-2508
CEL: 510-468-0613
FAX: 510-788-6039

PROJECT
SALTALK FREMONT KITCHEN TENANT IMPROVEMENT

42550 ALBRAE ST.,
FREMONT, CA 94538

CLIENT
SALTALK, INC.
3334 VICTOR CT.,
SANTA CLARA, CA 95054

SUBMITTALS/ REVISIONS:

1	HEALTH/USD SUBMITTAL	04/01/2022
2	2ND BLD. SUBMITTAL	07/22/2022
3	3RD BLD. SUBMITTAL	08/30/2022
4	3RD USD. SUBMITTAL	09/01/2022
5	2ND HEALTH SUBMITTAL	09/29/2022

PROJECT NO	21127
SCALE	AS SHOWN
DATE	2/10/2022
DRAWN BY	TL / YC
CHECKED BY	JP

SHEET TITLE
MECHANICAL DETAILS

SHEET NO
M-0.6

BIMcloud: COAR CONFERENCE - BIMcloud Basic for ARCHICAD 25/2021 Fremont Ghost Kitchen Thursday, February 10, 2022 1:47 PM

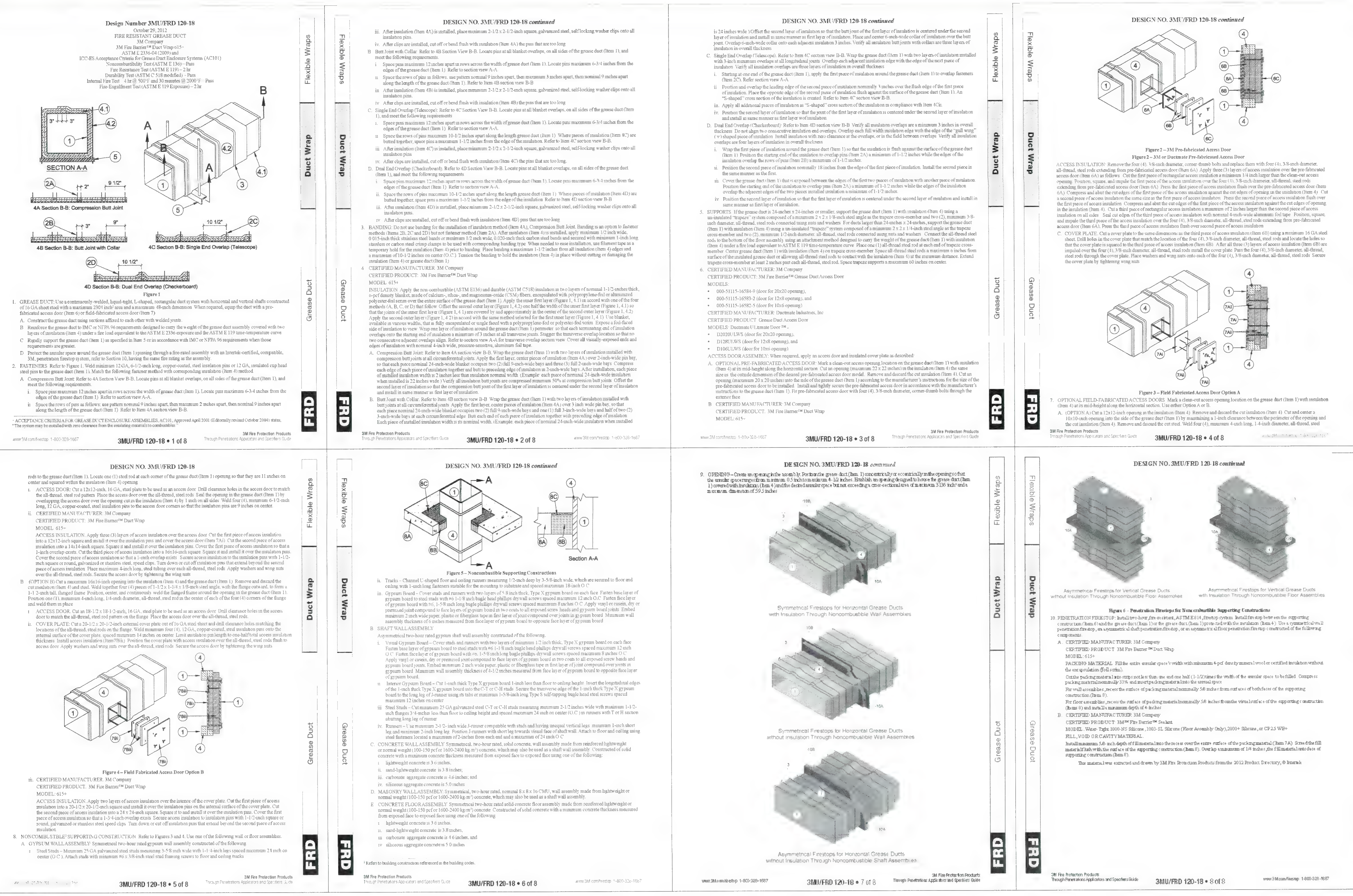

1 — 3M 615+ FIRE WRAP UL LISTED INSTALLATION DETAIL
SCALE: N.T.S.

SHOWN FOR REFERENCE ONLY. SEE FACTORY UL LISTED INSTALLATION MANUAL FOR DETAIL.

Alameda County
Dept. of Environmental Health
Approved By: T. Tran

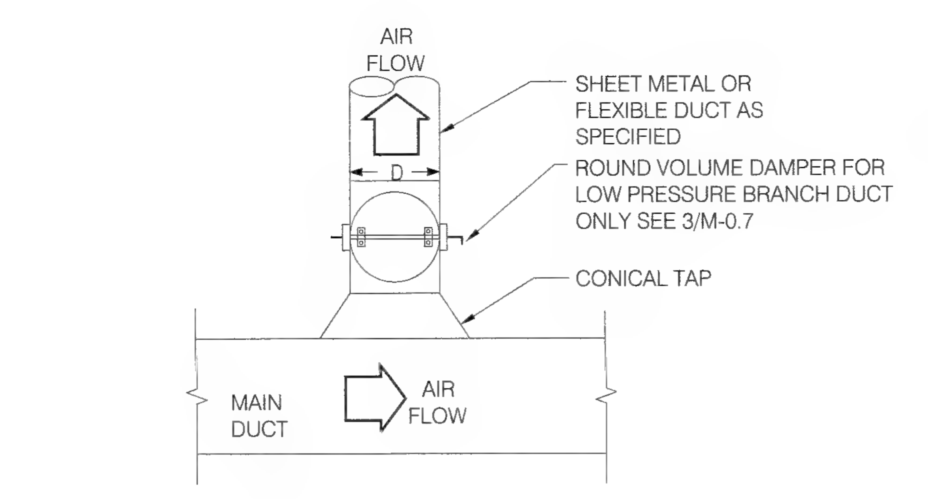

NOTES :

1. USE FOR SYMBOL WHERE BRANCH DUCT AIR QUANTITY IS LESS THAN 25% OF THE TOTAL AIR FLOW.
2. DEPTH OF MAIN DUCT MUST BE 2" LARGER THAN CONICAL DIAMETER.

2 — CIRCULAR DUCT CONICAL TAP WITH VOLUME DAMPER
SCALE: N.T.S.

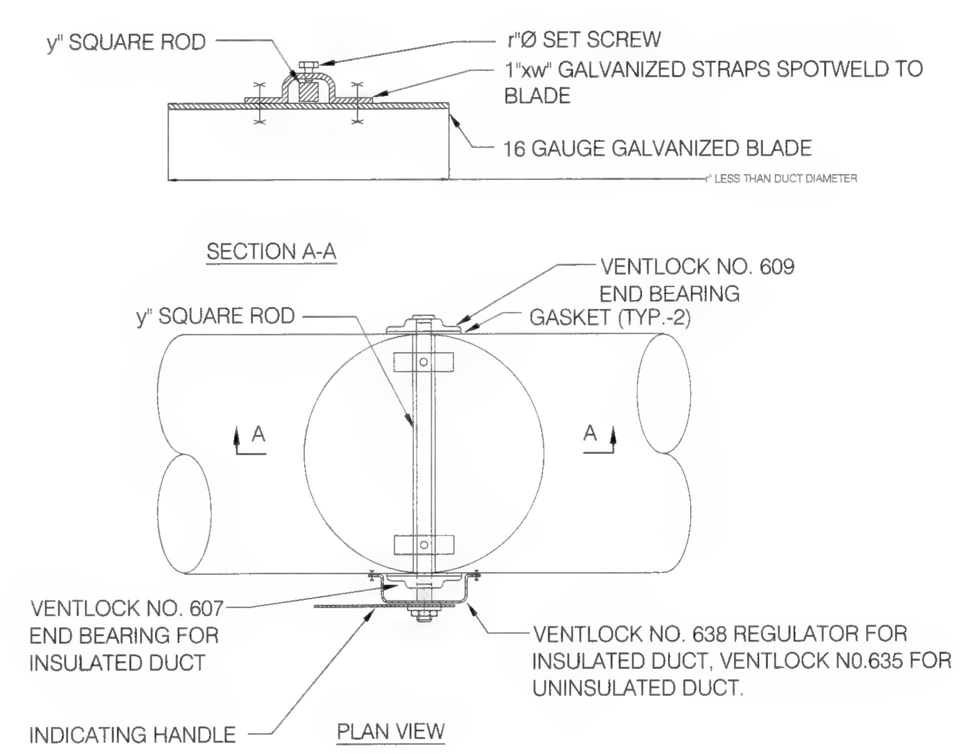

4 — ROUND VOLUME DAMPER UP TO 14" DIAMETER, LOW PRESSURE
SCALE: N.T.S.

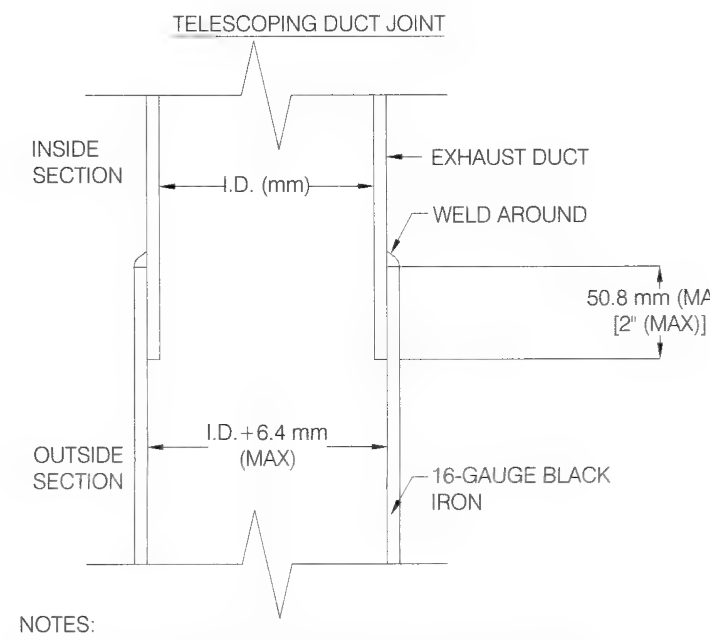

NOTES:
1. DUCT SIZE DECREASES (GOING UPWARD) WITH EACH TELESCOPE.
2. SMALLER (INSIDE) DUCT SECTION IS ALWAYS ABOVE OR UPHILL (ON SLOPED DUCT), TO BE SELF-DRAINING INTO LARGER (OUTSIDE) DUCT.

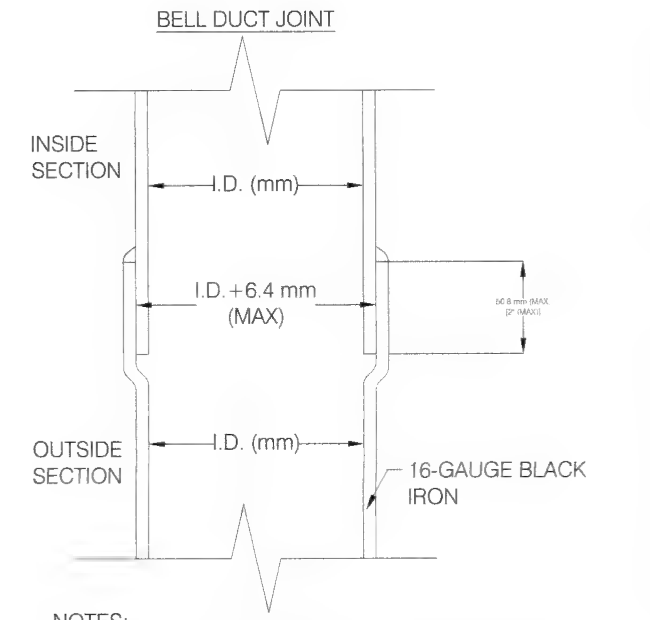

NOTES:
1. DUCT SIZE STAYS THE SAME THROUGHOUT THE DUCT SYSTEM.
2. SMALLER (INSIDE) MALE DUCT END IS ALWAYS ABOVE OR UPHILL (ON SLOPED DUCT), TO BE SELF-DRAINING INTO LARGER (OUTSIDE) FEMALE DUCT END

4 — TYPE-I GREASE DUCT CONSTRUCTION
SCALE: N.T.S.

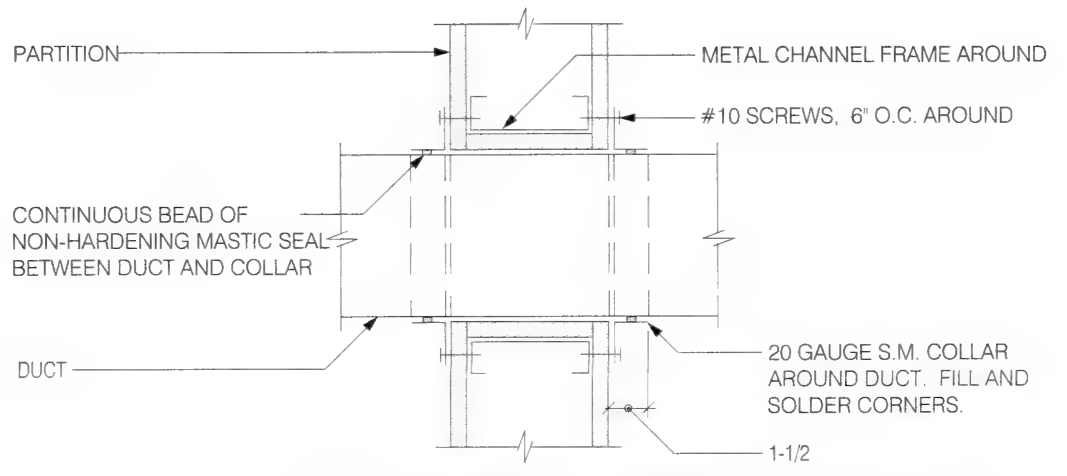

NOTE: DETAIL SIMILAR FOR ALL CONCEALED AND EXPOSED DUCTS THRU FULL HEIGHT NON-RATED PARTITION.

5 — DUCT THROUGH FULL HEIGHT NON-RATED PARTITION
SCALE: N.T.S.

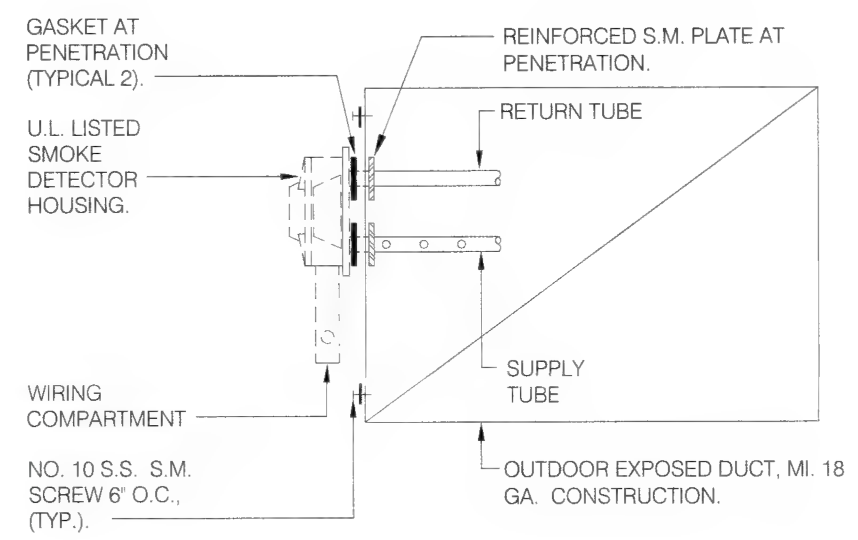

NOTES:

1. SMOKE DETECTOR SHALL BE STATE FIRE MARSHALL APPROVED U.L. LISTED AND INSTALLED STRICTLY AND PER MANUFACTURER PRINTED INSTRUCTIONS.
2. MANUFACTURER'S INSTALLATION INSTRUCTIONS SHALL BE MADE AVAILABLE TO THE INSPECTION AUTHORITIES.
3. AIR VELOCITY INSIDE DUCTWORK SHALL BE ABOVE THE MINIMUM VELOCITY AT ALL TIMES.

6 — SOMKE DETECTOR DETAIL
SCALE: N.T.S.

CO-AR DESIGN, INC.
680 Brea Canyon Rd., Ste. 178
Diamond Bar, CA 91789

Office: 909-598-0186
http:\\www.coardesign.com

Dennis J. Lee, Architect
dennisl@coardesign.com

THESE DRAWINGS ARE THE PROPERTY OF THE ARCHITECT. THE DESIGNS SHOWN AND DESCRIBED HERIN INCLUDING ALL TECHNICAL DRAWINGS ARE PROPRIETARY AND CANNOT BE COPIED, DUPLICATED OR COMMERCIALLY EXPLOITED, IN WHOLE OR IN PART. THE DRAWINGS AND SPECIFICATIONS SHALL NOT BE USED BY THE OWNER ON OTHER PROJECTS, FOR ADDITIONS TO THIS PROJECT, OR FOR COMPLETION OF THIS PROJECT BY OTHERS. THE OWNER AGREES TO HOLD HARMLESS, INDEMNIFY AND DEFEND THE ARCHITECT AGAINST ALL DAMAGES, CLAIMS AND LOSSES, INCLUDING DEFENSE COSTS, ARISING OUT OF ANY REUSE OF THE PLANS AND SPECIFICATIONS WITHOUT THE WRITTEN AUTHORIZATION OF THE ARCHITECT OF RECORD.

COPYRIGHT © 2022 CO-AR DESIGN, INC., ALL RIGHTS RESERVED.

SEAL

REGISTERED PROFESSIONAL ENGINEER — JIA HUI PAN — M35374 — EXP. 6/30/23 — MECHANICAL — STATE OF CALIFORNIA

NOTES:

JHP Engineering and Design Services Inc.
3103 Independence Drive
Livermore, CA 94551
TEL: 925-409-2508
CEL: 510-468-0613
FAX: 510-788-6039

PROJECT
SALTALK FREMONT KITCHEN TENANT IMPROVEMENT

42550 ALBRAE ST.,
FREMONT, CA 94538

CLIENT

SALTALK, INC.
3334 VICTOR CT.,
SANTA CLARA, CA 95054

SUBMITTALS/ REVISIONS:

1	HEALTH/USD SUBMITTAL	04/01/2022
2	2ND BLD. SUBMITTAL	07/22/2022
3	3RD BLD. SUBMITTAL	08/30/2022
4	3RD USD. SUBMITTAL	09/01/2022
5	2ND HEALTH SUBMITTAL	09/29/2022

PROJECT NO:	21127
SCALE:	AS SHOWN
DATE:	2/10/2022
DRAWN BY:	TL / YC
CHECKED BY:	JP

SHEET TITLE
MECHANICAL DETAILS

SHEET NO:
M-0.7

FORM NO.: ________

Field Install:
7.5 Ton

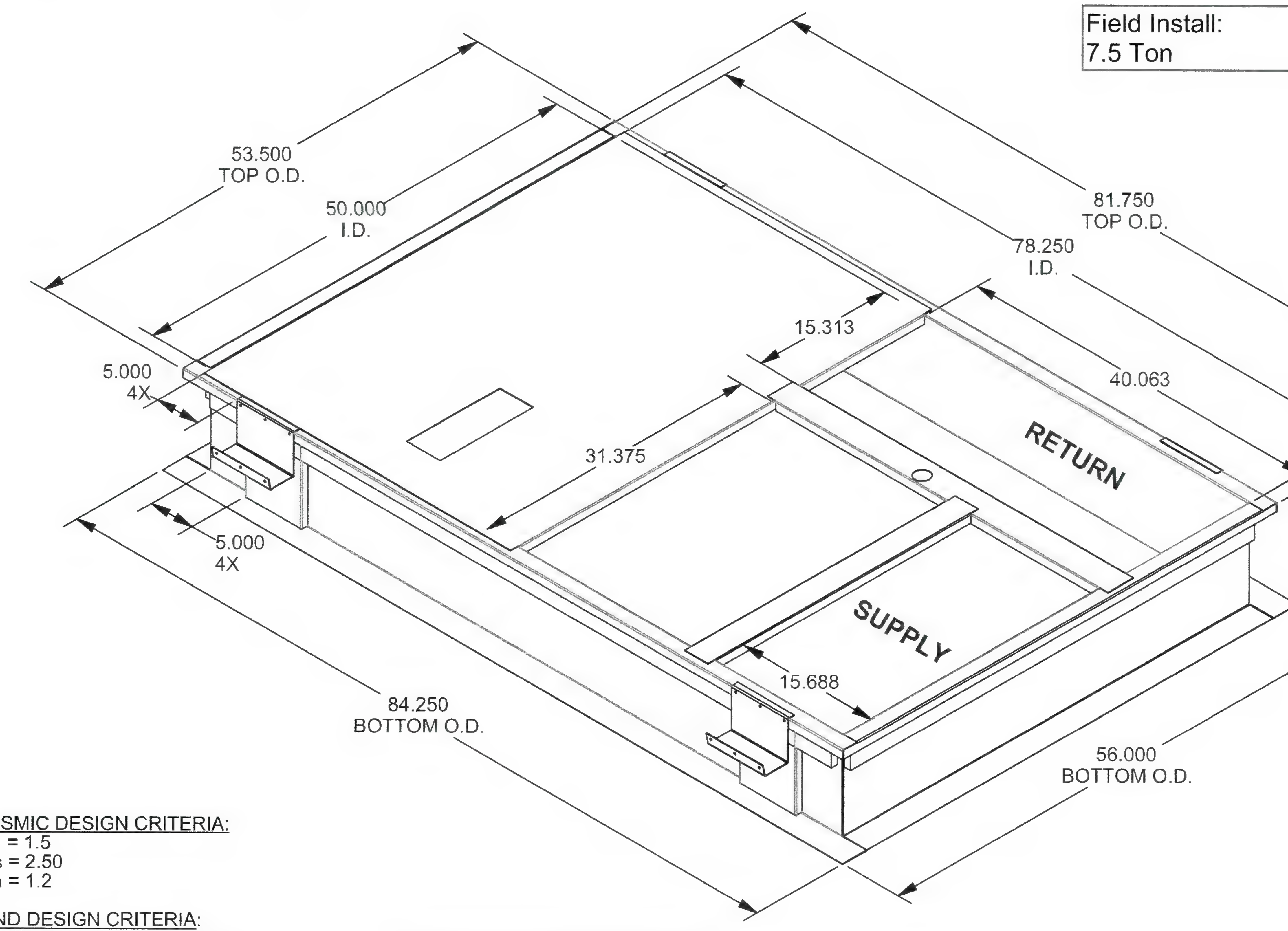

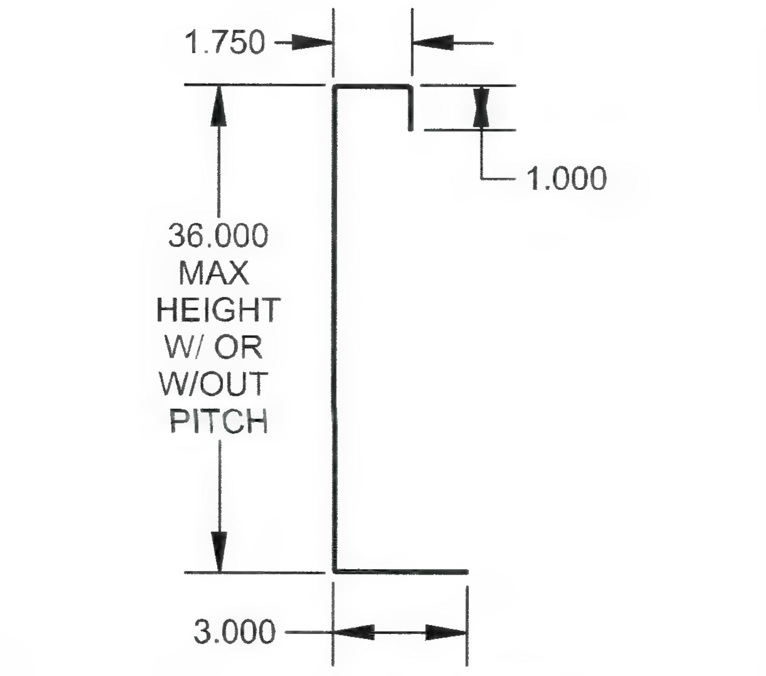

CURB END DETAIL

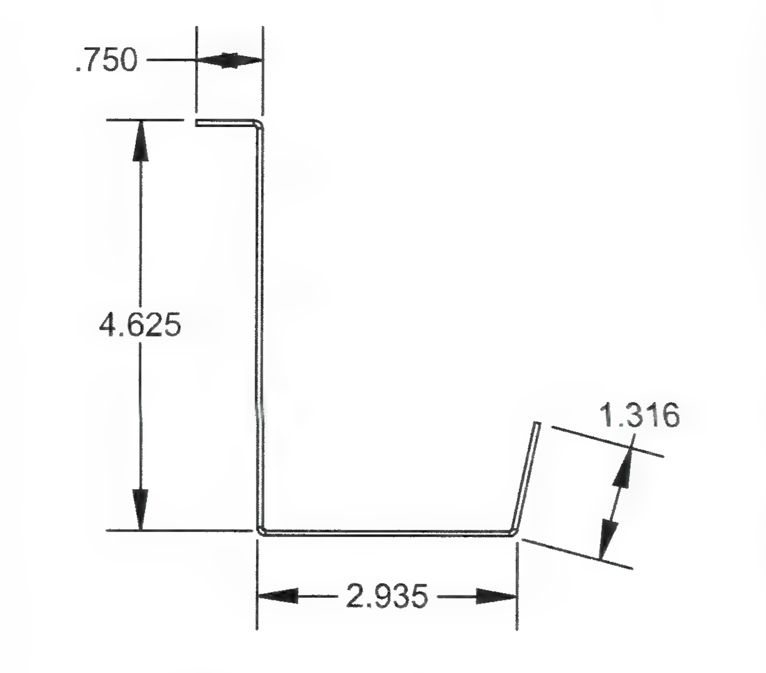

MICROHOLD DETAIL

WELDED CURB CORNER DETAIL

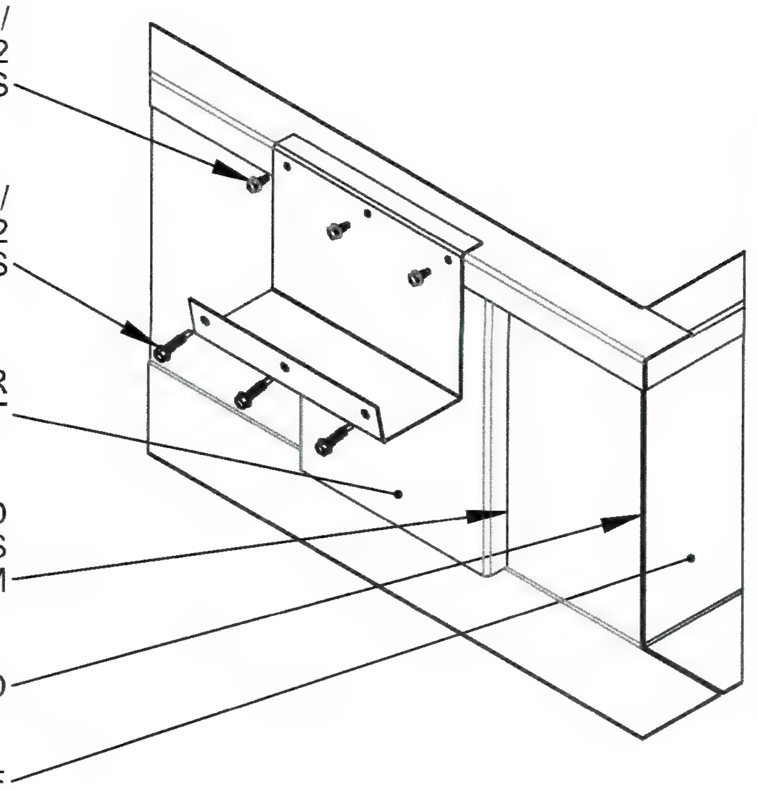

UNIT TO CURB ATTACHMENT DETAIL

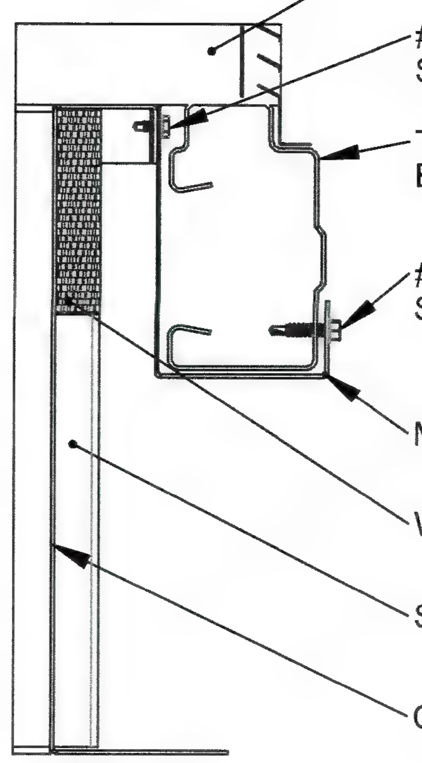

SEISMIC DESIGN CRITERIA:
- Ip = 1.5
- Ss = 2.50
- Fa = 1.2

WIND DESIGN CRITERIA:
- 60 FT. TALL BUILDING MAX.
- EXPOSURE C
- 155 MPH, 3-SECOND GUST WIND SPEED
- RISK CATEGORY III & IV

CURB STIFFENER REQUIREMENTS:
- STIFFENERS ARE REQUIRED ON ALL CURBS OVER 14" TALL
- (2) STIFFENERS, (2) MICROHOLDS PER LONG SIDE
- (0) STIFFENERS, (0) MICROHOLDS PER SHORT SIDE

THE STANDARD PRODUCT DOES NOT INCLUDE THROUGH THE SIDE SERVICE HOLES

MicroMetl Corporation

CRBW-SRT34GA-08 Series	08" TALL	113 LBS.
CRBW-SRT34GA-11 Series	11" TALL	125 LBS.
CRBW-SRT34GA-14 Series	14" TALL	138 LBS.
CRBW-SRT34GA-24 Series	24" TALL	195 LBS.
CRBW-SRT34GA-36 Series	36" TALL	253 LBS.

STRUCTURALLY CALCULATED WELDED CURB

MAX UNIT WEIGHT 1786 lbs.

ANCHORAGE DETAILS TO ROOF: ALL DETAILS ARE CALCULATED USING THE SEISMIC DESIGN CRITERIA INDICATED ABOVE. FOR ANY OTHER TYPE OF ANCHORAGE THE EOR HAS THE OPTION TO CALCULATE THE ANCHORAGE USING SITE SPECIFIC PARAMETERS AND LOADS.

Indianapolis, IN. : (800) 662-4822

Sparks, NV. (800) 884-4662

Longview, TX. (903) 248-4800

DRAWN BY: IR | DATE 08/20/2019

MEETS SEISMIC REQUIREMENTS FOR 2019 CBC & 2018 IBC

MEETS REQUIREMENTS FOR 155 MPH, 60' BUILDING HEIGHT MAX. 3 SEC. GUST, EXP C

TYPICAL PLAN VIEW:

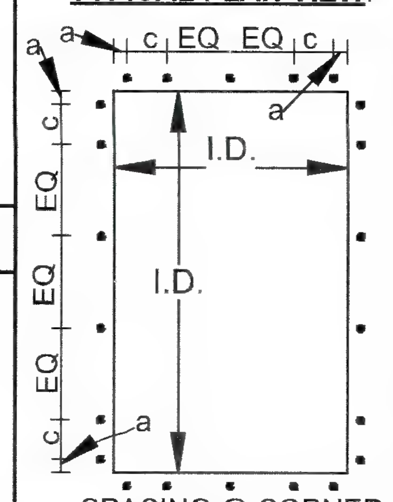

c = SPACING @ CORNER ANCHORS

STEEL ATTACHMENT:
(BEAM BY OTHERS)
USE A307 1/2" DIA. BOLTS, W/ WASHER CENTERED ON FLANGE
a = 2"
c = 6"

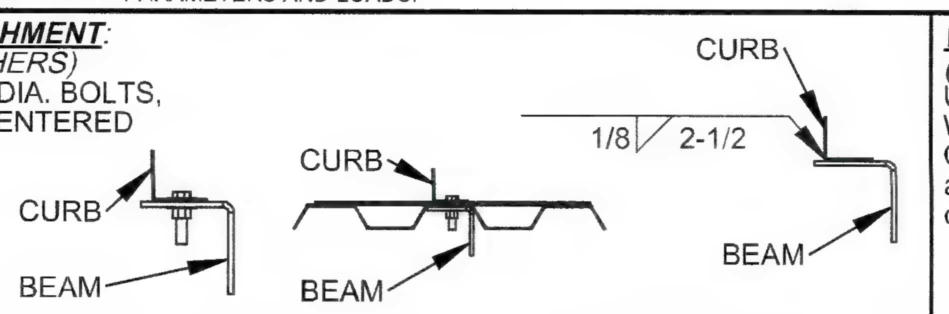

CURB HEIGHT	QTY OF ANCHORS			TOTL
	EA. LONG SIDE	EA. SHORT SIDE	EA. CORNER	
UP TO 14"	1	1	2	12
UP TO 24"	1	1	2	12
UP TO 36"	1	1	4	20

WELD OPTION:
(2.5") LONG 1/8" FILLET WELDS ARE PERMITTED TO BE USED IN PLACE OF EACH BOLT INDICATED BY THE STEEL ATTACHMENT DETAIL, EQUALLY SPACED

WOOD ATTACHMENT:
(REF. DOUGLAS FIR)
USE 1/4" x 3" SIMPSON SDS W/ WASHER, CENTERED ON CURB FLANGE
a = 1"
c = 3"

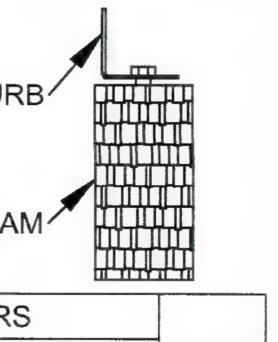

CURB HEIGHT	QTY OF ANCHORS			TOTL
	EA. LONG SIDE	EA. SHORT SIDE	EA. CORNER	
UP TO 14"	7	4	4	38
UP TO 24"	8	5	4	42
UP TO 36"	10	5	6	54

CONCRETE ATTACHMENT:
(3000 PSI MINIMUM,
6" MINIMUM THICKNESS)
(4" MIN EDGE DISTANCE,
3-3/4" EMBEDDED)
USE 1/2" SIMPSON TITEN HD CENTERED ON CURB FLANGE, 8" MIN. SPACING
a = 3"
c = 8"

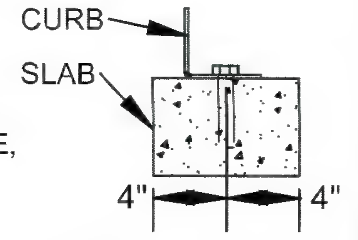

CURB HEIGHT	QTY OF ANCHORS			TOTL
	EA. LONG SIDE	EA. SHORT SIDE	EA. CORNER	
UP TO 14"	3	1	2	16
UP TO 24"	3	1	2	16
UP TO 36"	3	1	4	24

REGISTERED PROFESSIONAL ENGINEER CLIFFORD H. JOHNSON No. 2602 Exp. 6-30-23 STRUCTURAL STATE OF CALIFORNIA

7/26/2021

BJG# 20190065

THE INFORMATION CONTAINED IN THIS DRAWING IS THE SOLE PROPERTY OF MICROMETL CORPORATION. ANY REPRODUCTION IN PART OR WHOLE WITHOUT THE WRITTEN PERMISSION OF MICROMETL CORPORATION. IS PROHIBITED.

ENGS03A

1 RTU-01 FACTORY ROOF CURB DETAIL
SCALE: N.T.S

Alameda County
Dept. of Environmental Health
Approved By: T. Tran

CO-AR DESIGN, INC.
680 Brea Canyon Rd., Ste. 178
Diamond Bar, CA 91789

Office: 909 598-0186
http:\\www.coardesign.com

Dennis J. Lee, Architect
dennisl@coardesign.com

THESE DRAWINGS ARE THE PROPERTY OF THE ARCHITECT THE DESIGNS SHOWN AND DESCRIBED HERIN INCLUDING ALL TECHNICAL DRAWINGS ARE PROPRIETARY AND CANNOT BE COPIED, DUPLICATED OR COMMERCIALLY EXPLOITED, IN WHOLE OR IN PART THE DRAWINGS AND SPECIFICATIONS SHALL NOT BE USED BY THE OWNER ON OTHER PROJECTS, FOR ADDITIONS TO THIS PROJECT, OR FOR COMPLETION OF THIS PROJECT BY OTHERS THE OWNER AGREES TO HOLD HARMLESS, INDEMNIFY AND DEFEND THE ARCHITECT AGAINST ALL DAMAGES, CLAIMS AND LOSSES, INCLUDING DEFENSE COSTS, ARISING OUT OF ANY REUSE OF THE PLANS AND SPECIFICATIONS WITHOUT THE WRITTEN AUTHORIZATION OF THE ARCHITECT OF RECORD

COPYRIGHT © 2022 CO-AR DESIGN, INC., ALL RIGHTS RESERVED

SEAL

REGISTERED PROFESSIONAL ENGINEER JIA HUI PAN M35374 EXP 6/30/23 MECHANICAL STATE OF CALIFORNIA

NOTES:

JHP Engineering and Design Services Inc.
3103 Independence Drive
Livermore, CA 94551
TEL: 925-409-2508
CEL: 510-468-0613
FAX: 510-788-6039

PROJECT:
SALTALK FREMONT KITCHEN TENANT IMPROVEMENT

42550 ALBRAE ST.,
FREMONT, CA 94538

CLIENT
SALTALK, INC.
3334 VICTOR CT.,
SANTA CLARA, CA 95054

SUBMITTALS/ REVISIONS:

1	HEALTH/USD SUBMITTAL	04/01/2022
2	2ND BLD SUBMITTAL	07/22/2022
3	3RD BLD. SUBMITTAL	08/30/2022
4	3RD USD SUBMITTAL	09/01/2022
5	2ND HEALTH SUBMITTAL	09/29/2022

PROJECT NO:	21127
SCALE:	AS SHOWN
DATE:	2/10/2022
DRAWN BY:	TL / YC
CHECKED BY:	JP

SHEET TITLE:
MECHANICAL DETAILS

SHEET NO:
M-0.8

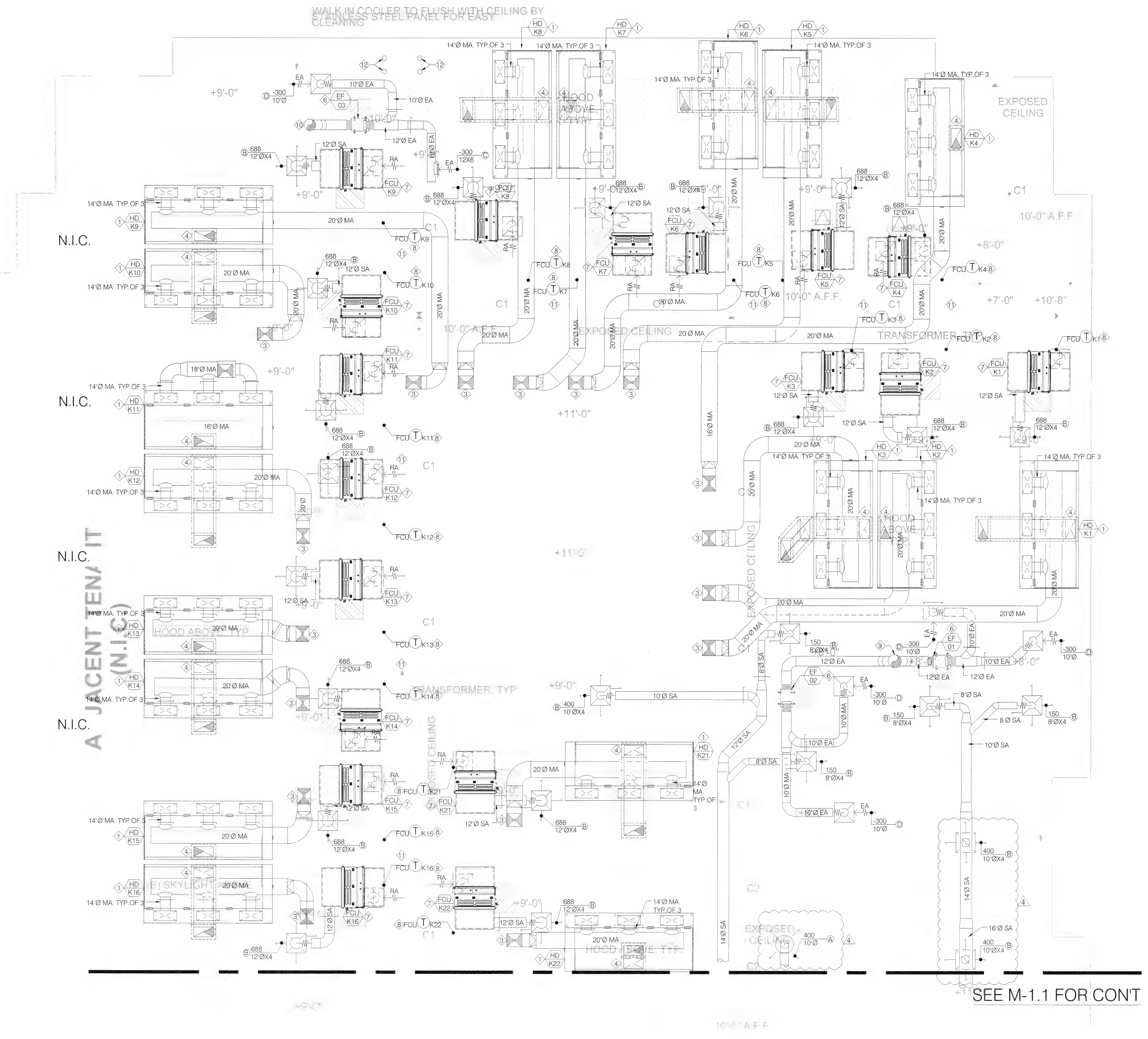

GROUND FLOOR MECHANICAL REFLECTED CEILING PLAN - AREA A

SCALE: 1/4" = 1'-0"

GENERAL NOTES:

1. 2-LAYERS OF 1-HOUR UL LISTED GREASE DUCT WRAP SHALL BE PROVIDED TO ALL TYPE-I GREASE DUCT AND SHALL BE INSTALLED PER LISTING. OTHERWISE, ALL TYPE I GREASE DUCT SYSTEM MUST HAVE A CLEARANCE OF AT LEAST 18 INCHES TO COMBUSTIBLE MATERIAL, 3 INCHES TO LIMITED-COMBUSTIBLE MATERIAL, AND 0 INCHES TO NONCOMBUSTIBLE MATERIAL PER 2019 CMC 507.3.
2. TYPE I HOODS AND DUCTS IN CONCEALED SPACE ARE REQUIRED TO HAVE 1 HOUR PROTECTION IN ALL BUILDINGS. THIS INCLUDES THE TOP OF THE TYPE I HOOD IF THE TOP OF THE HOOD IS ENCLOSE.

SHEET NOTES:

1. 12-FEET UL LISTED TYPE-I KITCHEN HOOD. SEE KITCHEN HOOD DRAWING AND SCHEDULE FOR DETAILS. TYPICAL FOR ALL KITCHEN UNIT EXCEPT K24 AND K28.
2. 14-FEET UL LISTED TYPE-I KITCHEN HOOD. SEE KITCHEN HOOD DRAWING AND SCHEDULE FOR DETAILS. TYPICAL FOR K24 AND K28.
3. 18"X16" MA DN. FROM MAU ON ROOF AND TRANSITION TO 16"Ø ICS. SEE ROOF PLAN FOR CON'T. TYP. U.N.O.
4. 24"X12" TYPE-I GREASE DUCT W/ MIN. 16-GA ALL-WELDED CARBON STEEL DUCT CONNECT TO HOOD COLAR AND UP THROUGH ROOF W/ MIN. 2-LAYERS OF 1-HR UL LISTED FIRE WARP. OFFSET DUCT RISER PER PLAN AS NEEDED WITH UL LISTED CLEAN-OUT PROVIDED PER PLAN. SEE M-0.1 FOR DETAILED REQUIREMENTS OF GREASE SYSTEM. TYPICAL FOR HOOD IN ALL KITCHEN UNIT EXCEPT K24 AND K28.
5. 28"X12" TYPE-I GREASE DUCT W/ MIN. 16-GA ALL-WELDED CARBON STEEL DUCT CONNECT TO HOOD COLAR AND UP THROUGH ROOF W/ MIN. 2-LAYERS OF 1-HR UL LISTED FIRE WARP. OFFSET DUCT RISER PER PLAN AS NEEDED WITH UL LISTED CLEAN-OUT PROVIDED PER PLAN. SEE M-0.1 FOR DETAILED REQUIREMENTS OF GREASE SYSTEM. TYPICAL FOR HOOD IN ALL KITCHEN UNIT K24 AND K28.
6. IN-LINE EXHAUST FAN SUSPENDED FROM ROOF JOIST IN CEILING SPACE. SEE EQUIPMENT SCHEDULE FOR DETAILED REQUIREMENTS.
7. FAN COIL UNIT OF SPLIT HEAT PUMP SYSTEM SUSPENDED FROM ROOF JOIST IN CEILING SPACE. PROVIDE 24" LONG SA AND RA PLENUM W/ FLEXBLE DUCT CONNECTOR TO UNIT. SEE EQUIPMENT SCHEDULE FOR DETAILED REQUIREMENTS. TYPICAL OF 28
8. PROVIDE 24/7 PROGRAMMABLE THERMOSTAT ON WALL AT 60" AFF. NEAR RETURN AIR OPENING AND AWAY FROM ANY HEAT SOURCE. TYPICAL OF ALL.
9. 16" EA RISER UTR. COORDINATE WITH GC FOR NEW ROOF OPENING. SEE ROOF PLAN FOR CON'T.
10. 12" EA RISER UTR. COORDINATE WITH GC FOR NEW ROOF OPENING. SEE ROOF PLAN FOR CON'T.
11. TRANSFORMER LOCATION SHOWN FOR REFERENCE. DO NOT RUN DUCTWORK IN ANY AREA WITHIN 6' ABOVE TRANSFORMER. TYPICAL.
12. 4"Ø SCHE. 40 PVC WATER HEATER FLUE AND COMBUSTION AIR INTAKE UP THROUGH ROOF. SEE ROOF PLAN FOR CON'T. TYPICAL.

AREA OF WORK

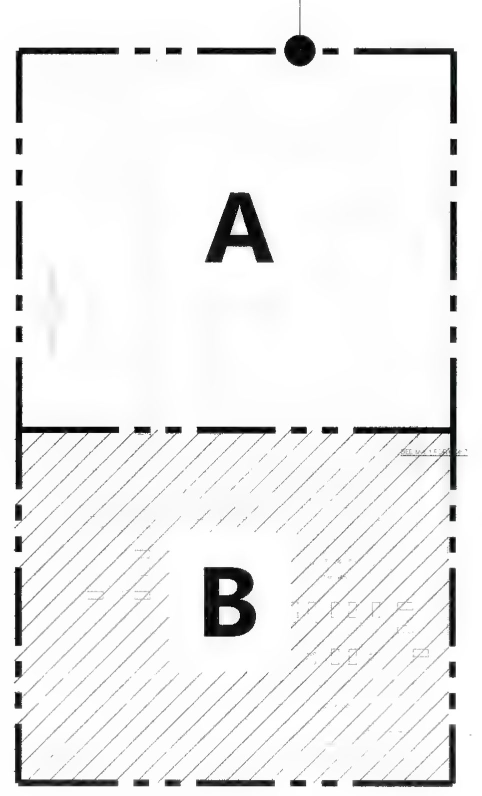

KEY MAP

SCALE: 1/8" = 1'-0"

CO-AR DESIGN, INC.
680 Brea Canyon Rd., Ste. 178
Diamond Bar, CA 91789

Office: 909-598-0186
http:\\www.coardesign.com

Dennis J. Lee, Architect
dennisl@coardesign.com

THESE DRAWINGS ARE THE PROPERTY OF THE ARCHITECT. THE DESIGNS SHOWN AND DESCRIBED HERIN INCLUDING ALL TECHNICAL DRAWINGS ARE PROPRIETARY AND CANNOT BE COPIED, DUPLICATED OR COMMERCIALLY EXPLOITED, IN WHOLE OR IN PART. THE DRAWINGS AND SPECIFICATIONS SHALL NOT BE USED BY THE OWNER ON OTHER PROJECTS, FOR ADDITIONS TO THIS PROJECT, OR FOR COMPLETION OF THIS PROJECT BY OTHERS. THE OWNER AGREES TO HOLD HARMLESS, INDEMNIFY AND DEFEND THE ARCHITECT AGAINST ALL DAMAGES, CLAIMS AND LOSSES, INCLUDING DEFENSE COSTS, ARISING OUT OF ANY REUSE OF THE PLANS AND SPECIFICATIONS WITHOUT THE WRITTEN AUTHORIZATION OF THE ARCHITECT OF RECORD.

COPYRIGHT © 2022 CO-AR DESIGN, INC., ALL RIGHTS RESERVED.

SEAL

REGISTERED PROFESSIONAL ENGINEER
JIA HUI PAN
M35374
EXP. 6/30/23
MECHANICAL
STATE OF CALIFORNIA

NOTES

JHP Engineering and Design Services Inc.
3103 Independence Drive
Livermore, CA 94551
TEL: 925-409-2508
CEL: 510-468-0613
FAX: 510-788-6039

PROJECT

SALTALK FREMONT KITCHEN TENANT IMPROVEMENT

42550 ALBRAE ST.,
FREMONT, CA 94538

CLIENT

SALTALK, INC.
3334 VICTOR CT.,
SANTA CLARA, CA 95054

SUBMITTALS/ REVISIONS

1	HEALTH/USD SUBMITTAL	04/01/2022
2	2ND BLD. SUBMITTAL	07/22/2022
3	3RD BLD. SUBMITTAL	08/30/2022
4	3RD USD. SUBMITTAL	09/01/2022
5	2ND HEALTH SUBMITTAL 4	09/29/2022

PROJECT NO:	21127
SCALE:	AS SHOWN
DATE:	2/10/2022
DRAWN BY:	TL / YC
CHECKED BY	JP

SHEET TITLE

MECHANICAL REFLECTED CEILING PLAN - AREA A

SHEET NO

M-1.0

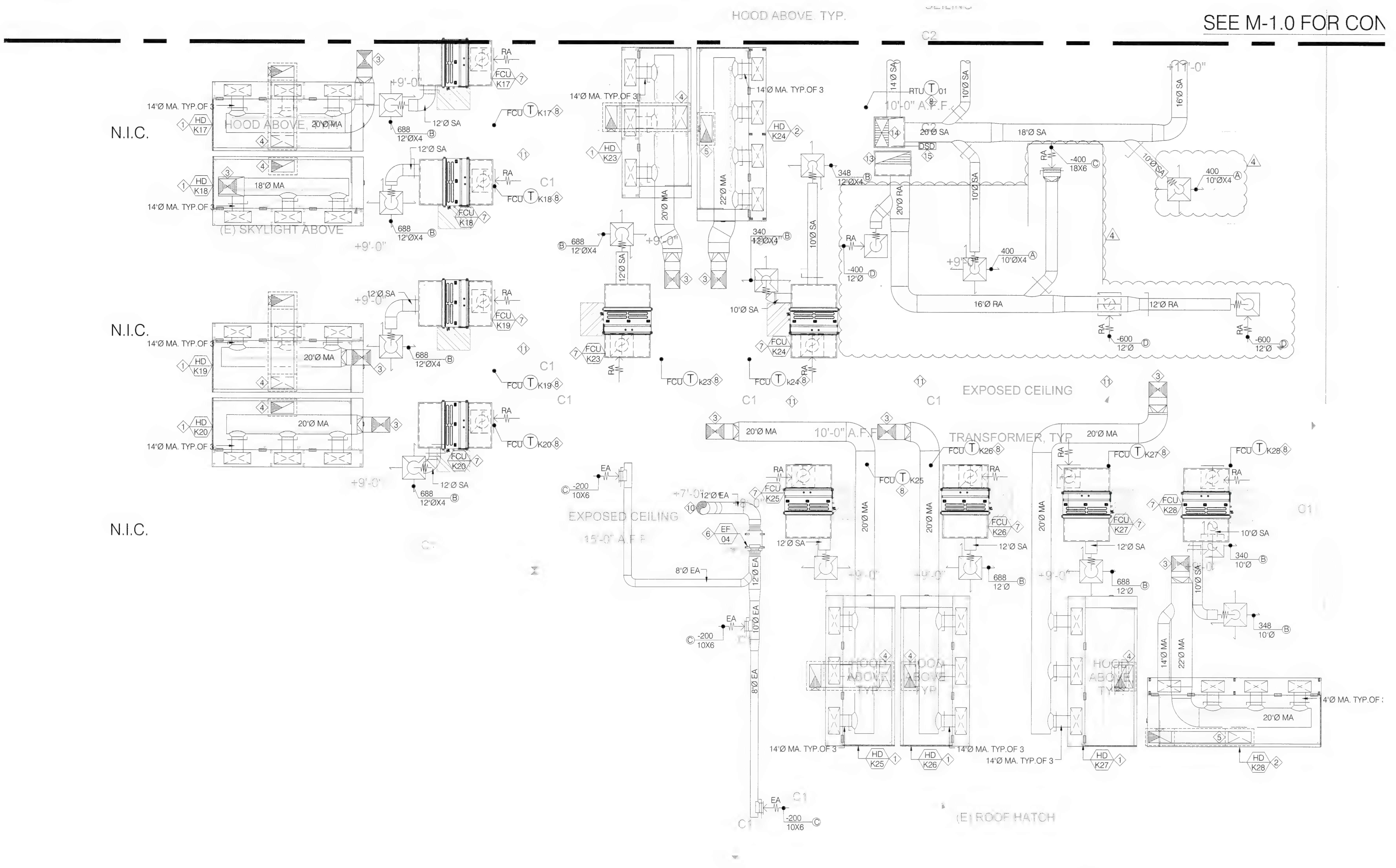

Alameda County
Dept. of Environmental Health
Approved By: T. Tran

GROUND FLOOR MECHANICAL REFLECTED CEILING PLAN - AREA B

SCALE: 1/4" = 1'-0"

GENERAL NOTES:

1. 2-LAYERS OF 1-HOUR UL LISTED GREASE DUCT WRAP SHALL BE PROVIDED TO ALL TYPE-I GREASE DUCT AND SHALL BE INSTALLED PER LISTING. OTHERWISE, ALL TYPE I GREASE DUCT SYSTEM MUST HAVE A CLEARANCE OF AT LEAST 18 INCHES TO COMBUSTIBLE MATERIAL, 3 INCHES TO LIMITED-COMBUSTIBLE MATERIAL, AND 0 INCHES TO NONCOMBUSTIBLE MATERIAL PER 2019 CMC 507.3.
2. TYPE I HOODS AND DUCTS IN CONCEALED SPACE ARE REQUIRED TO HAVE 1 HOUR PROTECTION IN ALL BUILDINGS. THIS INCLUDES THE TOP OF THE TYPE I HOOD IF THE TOP OF THE HOOD IS ENCLOSE.

SHEET NOTES:

1. 12-FEET UL LISTED TYPE-I KITCHEN HOOD. SEE KITCHEN HOOD DRAWING AND SCHEDULE FOR DETAILS. TYPICAL FOR ALL KITCHEN UNIT EXCEPT K24 AND K28.
2. 14-FEET UL LISTED TYPE-I KITCHEN HOOD. SEE KITCHEN HOOD DRAWING AND SCHEDULE FOR DETAILS. TYPICAL FOR K24 AND K28.
3. 18"X16" MA DN. FROM MAU ON ROOF AND TRANSITION TO 16"Ø ICS. SEE ROOF PLAN FOR CON'T. TYP. U.N.O.
4. 24"X12" TYPE-I GREASE DUCT W/ MIN. 16-GA ALL-WELDED CARBON STEEL DUCT CONNECT TO HOOD COLAR AND UP THROUGH ROOF W/ MIN. 2-LAYERS OF 1-HR UL LISTED FIRE WARP. OFFSET DUCT RISER PER PLAN AS NEEDED WITH UL LISTED CLEAN-OUT PROVIDED PER PLAN. SEE M-0.1 FOR DETAILED REQUIREMENTS OF GREASE SYSTEM. TYPICAL FOR HOOD IN ALL KITCHEN UNIT EXCEPT K24 AND 28.
5. 28"X12" TYPE-I GREASE DUCT W/ MIN. 16-GA ALL-WELDED CARBON STEEL DUCT CONNECT TO HOOD COLAR AND UP THROUGH ROOF W/ MIN. 2-LAYERS OF 1-HR UL LISTED FIRE WARP. OFFSET DUCT RISER PER PLAN AS NEEDED WITH UL LISTED CLEAN-OUT PROVIDED PER PLAN. SEE M-0.1 FOR DETAILED REQUIREMENTS OF GREASE SYSTEM. TYPICAL FOR HOOD IN ALL KITCHEN UNIT EXCEPT K24 AND 28.
6. IN-LINE EXHAUST FAN SUSPENDED FROM ROOF JOIST IN CEILING SPACE. SEE EQUIPMENT SCHEDULE FOR DETAILED REQUIREMENTS.
7. FAN COIL UNIT OF SPLIT HEAT PUMP SYSTEM SUSPENDED FROM ROOF JOIST IN CEILING SPACE. PROVIDE 24" LONG SA AND RA PLENUM W/ FLEXBLE DUCT CONNECTOR TO UNIT. SEE EQUIPMENT SCHEDULE FOR DETAILED REQUIREMENTS. TYPICAL OF 28
8. PROVIDE 24/7 PROGRAMMABLE THERMOSTAT ON WALL AT 60" AFF. NEAR RETURN AIR OPENING AND AWAY FROM ANY HEAT SOURCE. TYPICAL OF ALL.
9. 16" EA RISER UTR. COORDINATE WITH GC FOR NEW ROOF OPENING. SEE ROOF PLAN FOR CON'T.
10. 12" EA RISER UTR. COORDINATE WITH GC FOR NEW ROOF OPENING. SEE ROOF PLAN FOR CON'T.
11. TRANSFORMER LOCATION SHOWN FOR REFERENCE. DO NOT RUN DUCTWORK IN ANY AREA WITHIN 6' ABOVE TRANSFORMER. TYPICAL.
12. 4"Ø SCHE. 40 PVC WATER HEATER FLUE AND COMBUSTION AIR INTAKE UP THROUGH ROOF. SEE ROOF PLAN FOR CON'T. TYPICAL.
13. 36X12 RA RISER DOWN FROM RTU-01 AND CONNECT TO 36X24X36 RA PLENUM WITH 1" INTERNAL ACOUSTICAL LINING FOR DISTRIBUTION.
14. 28X14 SA RISER DOWN FROM RTU-01 AND CONNECT TO 30X30X36 SA PLENUM WITH 1" INTERNAL ACOUSTICAL LINING FOR DISTRIBUTION.
15. PROVIDE DUCT SMOKE DETECTOR AT SA PLENUM. DUCT DETECTOR SHALL SHUT-OFF FAN OF RTU UPON DETECTION OF SMOKE OR FIRE. COORDINATE WITH FIRE ALARM FOR CONTROL WIRING LANDING.

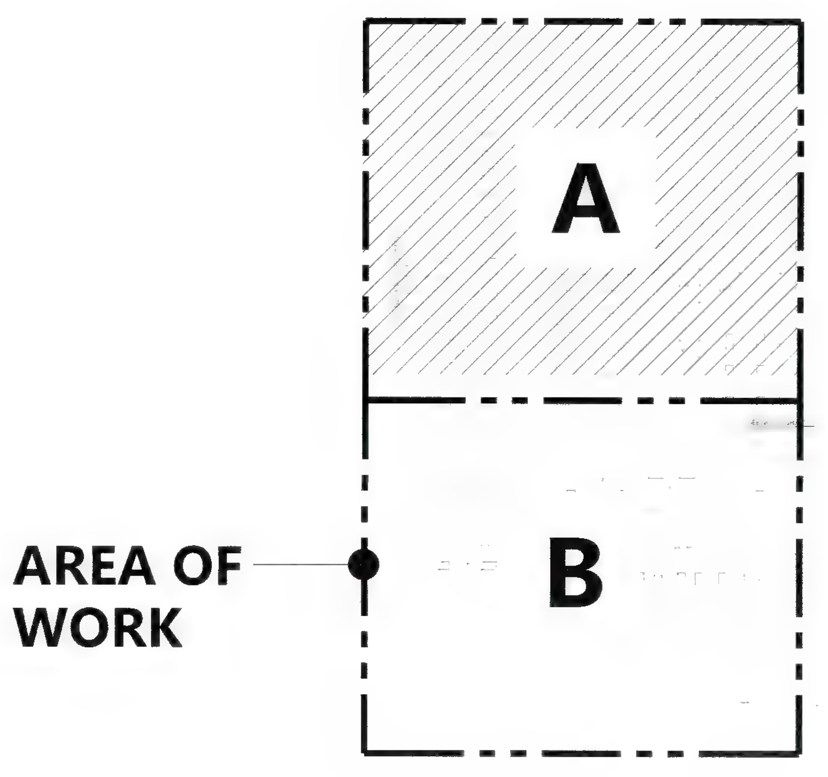

KEY MAP

SCALE: 1/8" = 1'-0"

CO-AR DESIGN, INC.
680 Brea Canyon Rd., Ste. 178
Diamond Bar, CA 91789

Office: 909-598-0186
http:\\www.coardesign.com

Dennis J. Lee, Architect
dennisl@coardesign.com

THESE DRAWINGS ARE THE PROPERTY OF THE ARCHITECT. THE DESIGNS SHOWN AND DESCRIBED HERIN INCLUDING ALL TECHNICAL DRAWINGS ARE PROPRIETARY AND CANNOT BE COPIED, DUPLICATED OR COMMERCIALLY EXPLOITED, IN WHOLE OR IN PART. THE DRAWINGS AND SPECIFICATIONS SHALL NOT BE USED BY THE OWNER ON OTHER PROJECTS, FOR ADDITIONS TO THIS PROJECT, OR FOR COMPLETION OF THIS PROJECT BY OTHERS. THE OWNER AGREES TO HOLD HARMLESS, INDEMNIFY AND DEFEND THE ARCHITECT AGAINST ALL DAMAGES, CLAIMS AND LOSSES, INCLUDING DEFENSE COSTS, ARISING OUT OF ANY REUSE OF THE PLANS AND SPECIFICATIONS WITHOUT THE WRITTEN AUTHORIZATION OF THE ARCHITECT OF RECORD.

COPYRIGHT © 2022 CO-AR DESIGN, INC., ALL RIGHTS RESERVED.

SEAL

REGISTERED PROFESSIONAL ENGINEER
JIA HU PAN
M35374
EXP. 6/30/23
MECHANICAL
STATE OF CALIFORNIA

NOTES

JHP Engineering and Design Services Inc.
3103 Independence Drive
Livermore, CA 94551
TEL: 925-409-2508
CEL: 510-468-0613
FAX: 510-788-6039

PROJECT

SALTALK FREMONT KITCHEN TENANT IMPROVEMENT

42550 ALBRAE ST.,
FREMONT, CA 94538

CLIENT

SALTALK, INC.
3334 VICTOR CT.,
SANTA CLARA, CA 95054

SUBMITTALS/ REVISIONS

1	HEALTH/USD SUBMITTAL	04/01/2022
2	2ND BLD. SUBMITTAL	07/22/2022
3	3RD BLD. SUBMITTAL	08/30/2022
4	3RD USD. SUBMITTAL	09/01/2022
5	2ND HEALTH SUBMITTAL 4	09/29/2022

PROJECT NO:	21127
SCALE:	AS SHOWN
DATE:	2/10/2022
DRAWN BY:	TL / YC
CHECKED BY:	JP

SHEET TITLE

MECHANICAL REFLECTED CEILING PLAN - AREA B

SHEET NO:

M-1.1

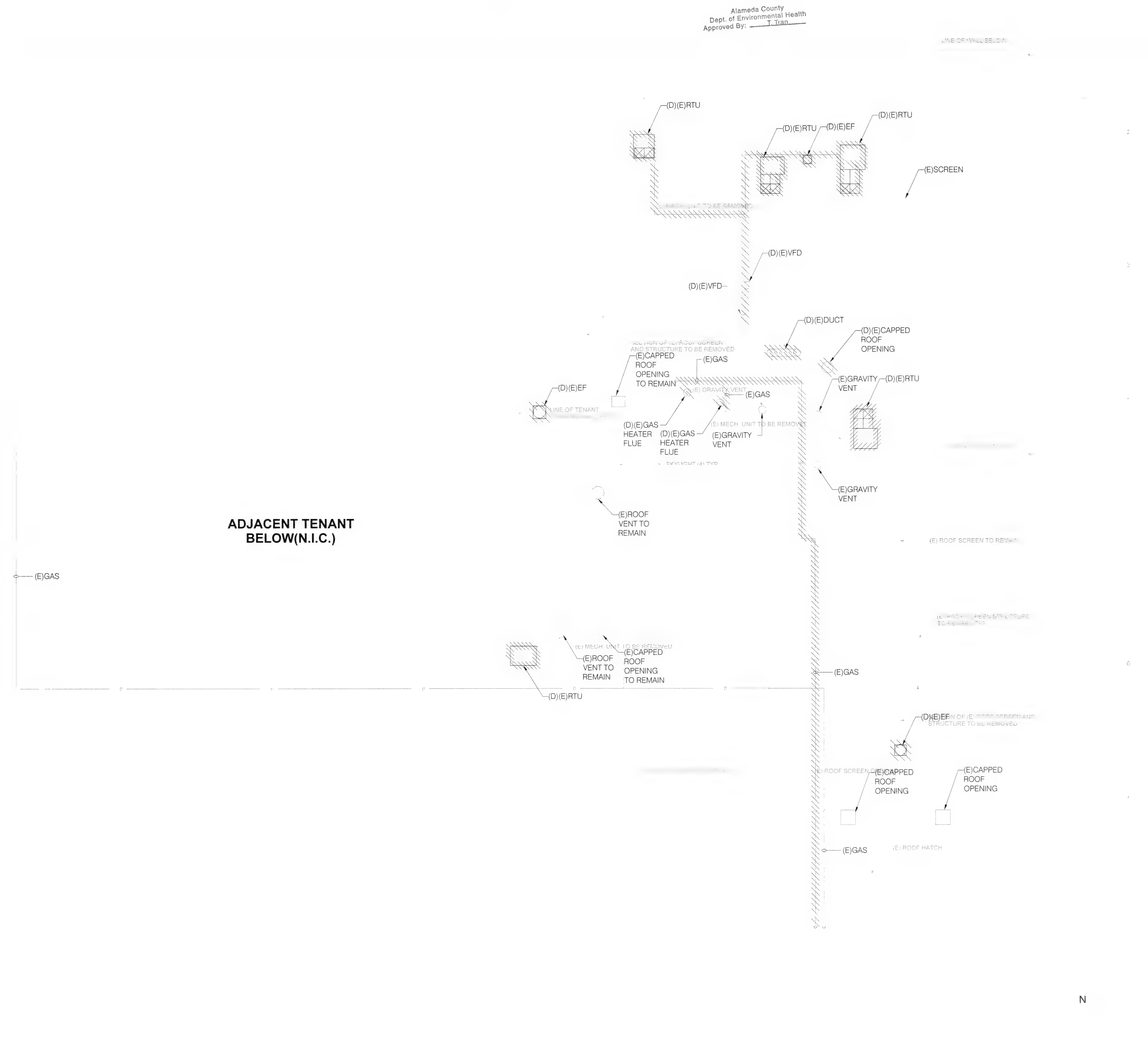

MECHANICAL ROOF DEMOLITION

GENERAL DEMOLITION NOTES:

1. DEMOLISH AND REMOVE ALL HVAC SYSTEM, SERVING PROJECT AREAS PER PLAN, INCLUDING, BUT NOT LIMITED TO, EQUIPMENTS, DUCTS, SUPPORTS, CONTROLS, AND ALL OTHER ASSOCIATED COMPONENTS.
2. DEMOLITION SHALL NOT INTERRUPT THE UTILITY SERVICE OF OTHER TENANT SPACES IF APPLICABLE. IF TEMPORARY UTILITY SHUT-DOWN IS REQUIRED, ALWAYS COORDINATE WITH FACILITY FACULTY PRIOR TO SHUT-DOWN.
3. ALL DEMOLITION DONE IN PLACE SHALL NOT JEOPARDIZE THE STRUCTURAL INTEGRITY OF THE EXISTING BUILDING OR EXISTING UTILITY SUPPORTS THAT IS REQUIRED TO BE REMAINED.
4. MECHANICAL CONTRACTOR IS RESPONSIBLE TO COORDINATE WITH GC TO REPAIR, REINFORCE, AND PATCH ANY WALL OR ROOF OPENING TO MAINTAIN EXISTING BUILDING FIRE RATING AND DESIGNED LIVE AND DEAD LOAD. ALSO PROVIDE NEW WATERPROOFING OR ROOFING TO SEAL OPENING WATERTIGHT.
5. COORDINATE WITH PLUMBING AND GENERAL CONTRACTOR FOR DEMOLITION AND REMOVAL OF (E) NATURAL GAS, WATER, AND DOMESTIC WATER PIPES AND ASSOCIATED COMPONENTS SERVING AFFECTED MECHANICAL EQUIPMENT.
6. COORDINATE WITH ELECTRICAL AND GENERAL CONTRACTOR FOR DEMOLITION AND REMOVAL OF (E) PANEL, DISCONNECT, CONDUITS, CONTROL WIRINGS, OUTLETS, AND ASSOCIATED COMPONENTS SERVING AFFECTED MECHANICAL EQUIPMENT.

CO AR

CO-AR DESIGN, INC.
680 Brea Canyon Rd., Ste. 178
Diamond Bar, CA 91789

Office: 909-598-0186
http:\\www.coardesign.com

Dennis J. Lee, Architect
dennisl@coardesign.com

THESE DRAWINGS ARE THE PROPERTY OF THE ARCHITECT. THE DESIGNS SHOWN AND DESCRIBED HERIN INCLUDING ALL TECHNICAL DRAWINGS ARE PROPRIETARY AND CANNOT BE COPIED, DUPLICATED OR COMMERCIALLY EXPLOITED, IN WHOLE OR IN PART. THE DRAWINGS AND SPECIFICATIONS SHALL NOT BE USED BY THE OWNER ON OTHER PROJECTS, FOR ADDITIONS TO THIS PROJECT, OR FOR COMPLETION OF THIS PROJECT BY OTHERS. THE OWNER AGREES TO HOLD HARMLESS, INDEMNIFY AND DEFEND THE ARCHITECT AGAINST ALL DAMAGES, CLAIMS AND LOSSES, INCLUDING DEFENSE COSTS, ARISING OUT OF ANY REUSE OF THE PLANS AND SPECIFICATIONS WITHOUT THE WRITTEN AUTHORIZATION OF THE ARCHITECT OF RECORD.

COPYRIGHT © 2022 CO-AR DESIGN, INC., ALL RIGHTS RESERVED.

SEAL

REGISTERED PROFESSIONAL ENGINEER
JIA HUI PAN
M35374
EXP. 6/30/23
MECHANICAL
STATE OF CALIFORNIA

NOTES.

JHP Engineering and Design Services Inc.
3103 Independence Drive
Livermore, CA 94551
TEL: 925-409-2508
CEL: 510-468-0613
FAX: 510-788-6039

PROJECT

SALTALK FREMONT KITCHEN TENANT IMPROVEMENT

42550 ALBRAE ST.,
FREMONT, CA 94538

CLIENT

SALTALK, INC.
3334 VICTOR CT.,
SANTA CLARA, CA 95054

SUBMITTALS/ REVISIONS

1	HEALTH/USD SUBMITTAL	04/01/2022
2	2ND BLD. SUBMITTAL	07/22/2022
3	3RD BLD. SUBMITTAL	08/30/2022
4	3RD USD. SUBMITTAL	09/01/2022
5	2ND HEALTH SUBMITTAL	09/29/2022

PROJECT NO	21127
SCALE.	AS SHOWN
DATE.	2/10/2022
DRAWN BY	TL / YC
CHECKED BY	JP

SHEET TITLE.

MECHANICAL ROOF DEMOLITION PLAN

SHEET NO

M-2.0

GENERAL NOTES:

1. 2-LAYERS OF 1-HOUR UL LISTED GREASE DUCT WRAP SHALL BE PROVIDED TO ALL TYPE-I GREASE DUCT AND SHALL BE INSTALLED PER LISTING. OTHERWISE, ALL TYPE I GREASE DUCT SYSTEM MUST HAVE A CLEARANCE OF AT LEAST 18 INCHES TO COMBUSTIBLE MATERIAL, 3 INCHES TO LIMITED-COMBUSTIBLE MATERIAL, AND 0 INCHES TO NONCOMBUSTIBLE MATERIAL PER 2019 CMC 507.3.
2. TYPE I HOODS AND DUCTS IN CONCEALED SPACE ARE REQUIRED TO HAVE 1 HOUR PROTECTION IN ALL BUILDINGS. THIS INCLUDES THE TOP OF THE TYPE I HOOD IF THE TOP OF THE HOOD IS ENCLOSE.

SHEET NOTES:

1. UL 762 LISTED KITCHEN EXHAUST FAN MOUNTED ON ROOF CURB. SEE EQUIPMENT SCHEDULE DETAILED REQUIREMENT.
2. TYPE-I GREASE DUCT CONSTRUCTED WITH MIN. 16-GA ALL-WELDED CARBON STEEL UP FROM KITCHEN HOOD BELOW. COORDINATE WITH GC FOR NEW ROOF OPENING AND WATERPROOFING. MECHANICAL TO PROVIDE WATERTIGHT SHEET METAL CAP WITH COUNTER-FLASHING AT OPENING.
3. KITCHEN MAKEUP AIR UNIT MOUNTED ON ROOF CURB. SEE EQUIPMENT SCHEDULE FOR DETAILED REQUIREMENTS.
4. OUTDOOR CONDENSING UNIT OF SPLIT HEAT PUMP MOUNTED ON ROOF CURB. SEE EQUIPMENT SCHEDULE FOR DETAILED REQUIREMENTS.
5. 4"Ø SCHEDULE 40 PVC DOMESTIC HOT WATER HEATER FLUE VENT UP FROM BELOW. PROVIDE FACTORY LISTED WEATHER CAP WITH SCREENED OPENING POINTING DOWNWARD. SEE WATER HEATER INSTALLATION MANUAL FOR DETAIL REQUIREMENT.
6. 4"Ø SCHEDULE 40 PVC DOMESTIC HOT WATER HEATER INTAKE UP FROM BELOW. PROVIDE FACTORY LISTED WEATHER CAP WITH SCREENED OPENING POINTING DOWNWARD. SEE WATER HEATER INSTALLATION MANUAL FOR DETAIL REQUIREMENT.
7. MECHANICAL TO PROVIDE UL LISTED GREASE DUCT CLEAN-OUT PER PLAN AND SPECIFICATIONS. SEE ME-0.1 FOR FURTHER DETAILED REQUIREMENTS. TYPICAL OF ALL.
8. MAINTAIN MIN. 18" CLEARANCE TO COMBUSTIBLE MATERIALS TO ALL TYPE-I EXHAUST FAN AND TYPE-I EXHAUST DUCTWORK. PROVIDE 2-LAYERS OF 1-HR FIRE RATED WARP OR LINE COMBUSTIBLE MATERIAL W/ NON-COMBUSTIBLE MATERIAL WHERE CLEARANCE CANNOT BE MET. TYPICAL.
9. TYPE-I KITCHEN EXHAUST DUCT SHALL BE SLOPED AT MIN. ¼"-PER-FOOT DROP TOWARD KITCHEN HOOD OR EQUIPMENT CONNECTIONS. ALSO PROVIDE UL LISTED (DURO DYNE THERMAFAB) FLEXIBLE CONNECTION AT FAN CONNECTION. TYPICAL.
10. MAKEUP AIR DUCT ON ROOF DOWN. COORDINATE WITH GC FOR NEW ROOF OPENING AND WATERPROOFING. MECHANICAL TO PROVIDE WATERTIGHT SHEET METAL CAP WITH COUNTER-FLASHING AT OPENING.
11. MIN. 3X FAN WHEEL DIAMETER STRAIGHT RUN AT EXHAUST FAN INLET. TYPICAL.
12. DISCHARGE OF KITCHEN EXHAUST FAN SHALL BE DISCHARGED AWAY FROM ROOF SURFACE AND SHALL AT MIN. 40" ABOVE ROOF SURFACE. THE EXHAUST OUTLET SHALL ALSO BE A MINIMUM OF TEN (10) FEET FROM ADJACENT BUILDINGS, PROPERTY LINES OR AIR INTAKES (THREE (3) FEET ABOVE ANY AIR INTAKE LOCATED WITHIN TEN (10) FEET IS ALLOWED) AND NOT LESS THAN FIVE (5) FEET FROM ANY COMBUSTIBLE STRUCTURE. TYPICAL.
13. PACKAGED ROOFTOP HEAT PUMP UNIT ON FACTORY ROOF CURB. SEE EQUIPMENT SCHEDULE AND DETAILS FOR FURTHER REQUIREMENTS.
14. OUTLINE OF 10-FEET CLEARANCES FOR MECHANICAL OSA INTAKE. 4
15. 12"Ø RESTROOM EXHAUST UP THRU ROOF AND TERMINATED WITH LISTED WEATHER HOOD.
16. 16"Ø RESTROOM EXHAUST UP THRU ROOF AND TERMINATED WITH LISTED WEATHER HOOD.
17. OFFSET MA RISER BELOW MAU BEFORE ROOF PENETRATION TO AVOID (E) STRUCTURAL MEMBERS. CONTRACTOR TO VERIFY EXACT BEAM LOCATION PRIOR TO INSTALL. TYPICAL OF ALL.

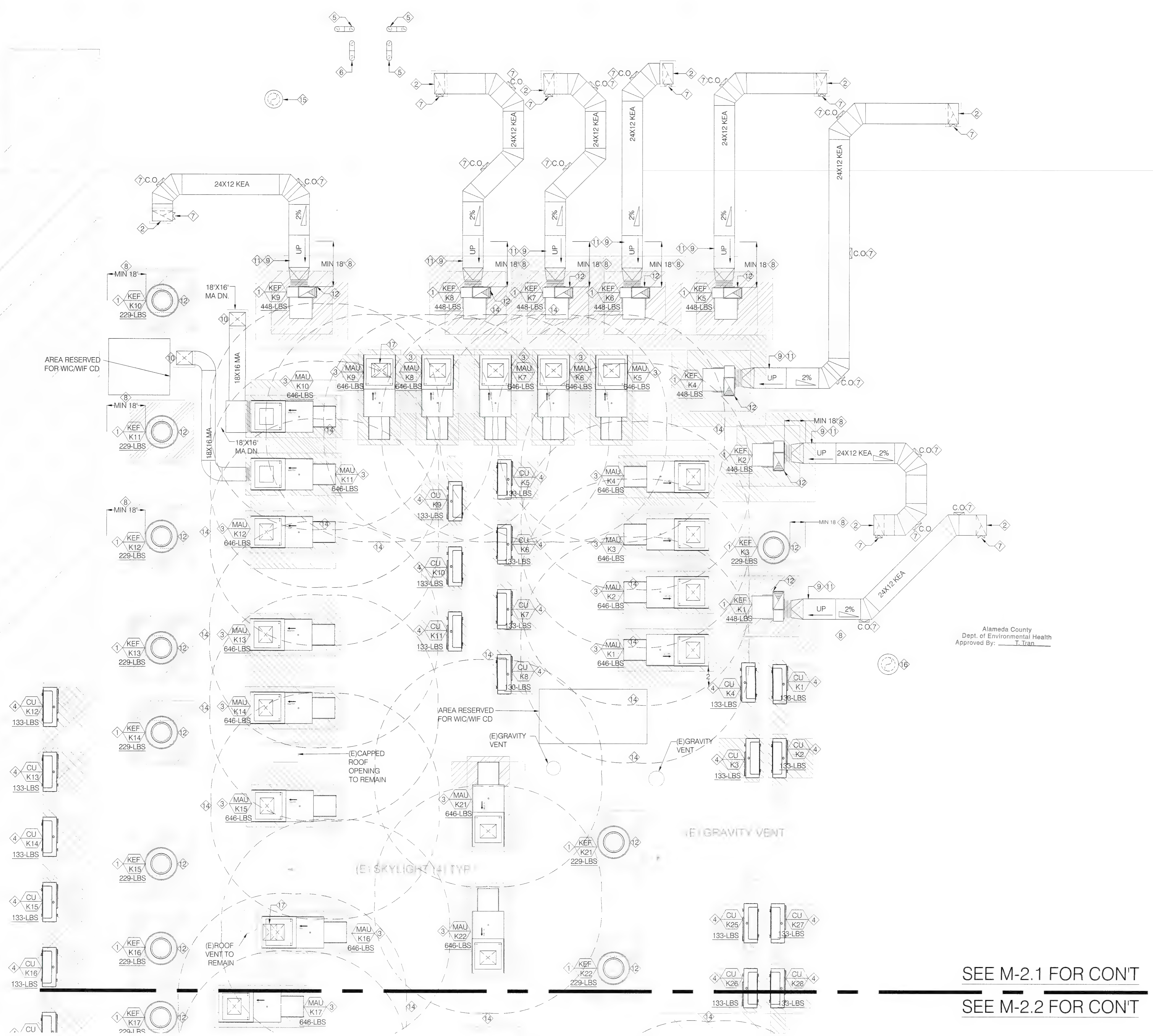

SEE M-2.1 FOR CON'T
SEE M-2.2 FOR CON'T

1 NEW MECHANICAL ROOF PLAN - AREA A
SCALE: 1/8" = 1'-0"

AREA OF WORK

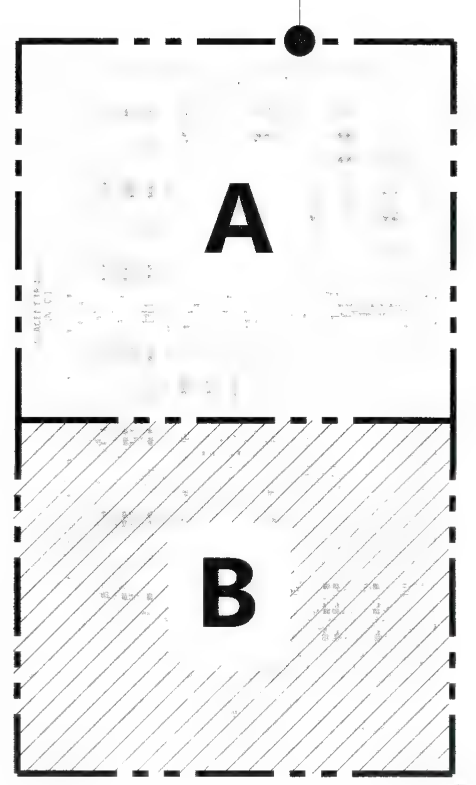

1 KEY MAP
SCALE: 1/32" = 1'-0"

CO-AR DESIGN, INC.
680 Brea Canyon Rd., Ste. 178
Diamond Bar, CA 91789

Office: 909-598-0186
http:\\www.coardesign.com

Dennis J. Lee, Architect
dennisl@coardesign.com

THESE DRAWINGS ARE THE PROPERTY OF THE ARCHITECT. THE DESIGNS SHOWN AND DESCRIBED HERIN INCLUDING ALL TECHNICAL DRAWINGS ARE PROPRIETARY AND CANNOT BE COPIED, DUPLICATED OR COMMERCIALLY EXPLOITED, IN WHOLE OR IN PART. THE DRAWINGS AND SPECIFICATIONS SHALL NOT BE USED BY THE OWNER ON OTHER PROJECTS, FOR ADDITIONS TO THIS PROJECT, OR FOR COMPLETION OF THIS PROJECT BY OTHERS. THE OWNER AGREES TO HOLD HARMLESS, INDEMNIFY AND DEFEND THE ARCHITECT AGAINST ALL DAMAGES, CLAIMS AND LOSSES, INCLUDING DEFENSE COSTS, ARISING OUT OF ANY REUSE OF THE PLANS AND SPECIFICATIONS WITHOUT THE WRITTEN AUTHORIZATION OF THE ARCHITECT OF RECORD.

COPYRIGHT © 2022 CO-AR DESIGN, INC., ALL RIGHTS RESERVED.

SEAL: REGISTERED PROFESSIONAL ENGINEER · M35374 · EXP. 6/30/23 · MECHANICAL · STATE OF CALIFORNIA

NOTES:

JHP Engineering and Design Services Inc.
3103 Independence Drive
Livermore, CA 94551
TEL: 925-409-2508
CEL: 510-468-0613
FAX: 510-788-6039

PROJECT
SALTALK FREMONT KITCHEN TENANT IMPROVEMENT

42550 ALBRAE ST.,
FREMONT, CA 94538

CLIENT

SALTALK, INC.
3334 VICTOR CT.,
SANTA CLARA, CA 95054

SUBMITTALS/ REVISIONS

1	HEALTH/USD SUBMITTAL	04/01/2022
2	2ND BLD. SUBMITTAL	07/22/2022
3	3RD BLD. SUBMITTAL	08/30/2022
4	3RD USD. SUBMITTAL	09/01/2022
5	2ND HEALTH SUBMITTAL 4	09/29/2022

PROJECT NO	21127
SCALE:	AS SHOWN
DATE:	2/10/2022
DRAWN BY:	TL / YC
CHECKED BY:	JP

SHEET TITLE
MECHANICAL ROOF PLAN - AREA A

SHEET NO
M-2.1

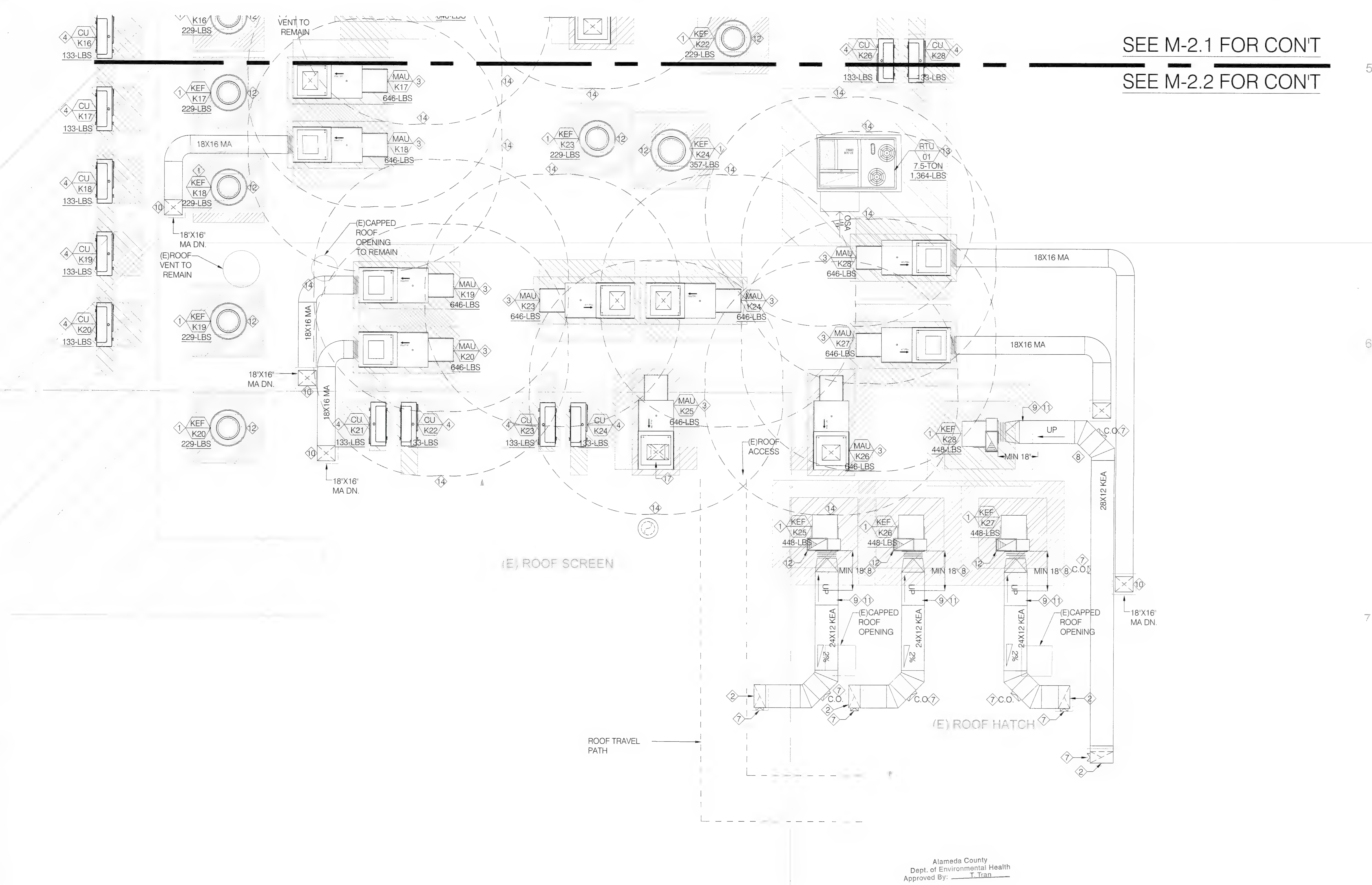

NEW MECHANICAL ROOF PLAN - AREA B

SCALE: 1/8" = 1'-0"

GENERAL NOTES:

1. 2-LAYERS OF 1-HOUR UL LISTED GREASE DUCT WRAP SHALL BE PROVIDED TO ALL TYPE-I GREASE DUCT AND SHALL BE INSTALLED PER LISTING. OTHERWISE, ALL TYPE I GREASE DUCT SYSTEM MUST HAVE A CLEARANCE OF AT LEAST 18 INCHES TO COMBUSTIBLE MATERIAL, 3 INCHES TO LIMITED-COMBUSTIBLE MATERIAL, AND 0 INCHES TO NONCOMBUSTIBLE MATERIAL PER 2019 CMC 507.3.
2. TYPE I HOODS AND DUCTS IN CONCEALED SPACE ARE REQUIRED TO HAVE 1 HOUR PROTECTION IN ALL BUILDINGS. THIS INCLUDES THE TOP OF THE TYPE I HOOD IF THE TOP OF THE HOOD IS ENCLOSE.

SHEET NOTES:

1. UL 762 LISTED KITCHEN EXHAUST FAN MOUNTED ON ROOF CURB. SEE EQUIPMENT SCHEDULE DETAILED REQUIREMENT.
2. TYPE-I GREASE DUCT CONSTRUCTED WITH MIN. 16-GA ALL-WELDED CARBON STEEL UP FROM KITCHEN HOOD BELOW. COORDINATE WITH GC FOR NEW ROOF OPENING AND WATERPROOFING. MECHANICAL TO PROVIDE WATERTIGHT SHEET METAL CAP WITH COUNTER-FLASHING AT OPENING.
3. KITCHEN MAKEUP AIR UNIT MOUNTED ON ROOF CURB. SEE EQUIPMENT SCHEDULE FOR DETAILED REQUIREMENTS.
4. OUTDOOR CONDENSING UNIT OF SPLIT HEAT PUMP MOUNTED ON ROOF CURB. SEE EQUIPMENT SCHEDULE FOR DETAILED REQUIREMENTS.
5. 4"Ø SCHEDULE 40 PVC DOMESTIC HOT WATER HEATER FLUE VENT UP FROM BELOW. PROVIDE FACTORY LISTED WEATHER CAP WITH SCREENED OPENING POINTING DOWNWARD. SEE WATER HEATER INSTALLATION MANUAL FOR DETAIL REQUIREMENT.
6. 4"Ø SCHEDULE 40 PVC DOMESTIC HOT WATER HEATER INTAKE UP FROM BELOW. PROVIDE FACTORY LISTED WEATHER CAP WITH SCREENED OPENING POINTING DOWNWARD. SEE WATER HEATER INSTALLATION MANUAL FOR DETAIL REQUIREMENT.
7. MECHANICAL TO PROVIDE UL LISTED GREASE DUCT CLEAN-OUT PER PLAN AND SPECIFICATIONS. SEE ME-0.1 FOR FURTHER DETAILED REQUIREMENTS. TYPICAL OF ALL.
8. MAINTAIN MIN. 18" CLEARANCE TO COMBUSTIBLE MATERIALS TO ALL TYPE-I EXHAUST FAN AND TYPE-I EXHAUST DUCTWORK. PROVIDE 2-LAYERS OF 1-HR FIRE RATED WARP OR LINE COMBUSTIBLE MATERIAL W/ NON-COMBUSTIBLE MATERIAL WHERE CLEARANCE CANNOT BE MET. TYPICAL.
9. TYPE-I KITCHEN EXHAUST DUCT SHALL BE SLOPED AT MIN. ¼"-PER-FOOT DROP TOWARD KITCHEN HOOD OR EQUIPMENT CONNECTIONS. ALSO PROVIDE UL LISTED (DURO DYNE THERMAFAB) FLEXIBLE CONNECTION AT FAN CONNECTION. TYPICAL.
10. MAKEUP AIR DUCT ON ROOF DOWN. COORDINATE WITH GC FOR NEW ROOF OPENING AND WATERPROOFING. MECHANICAL TO PROVIDE WATERTIGHT SHEET METAL CAP WITH COUNTER-FLASHING AT OPENING.
11. MIN. 3X FAN WHEEL DIAMETER STRAIGHT RUN AT EXHAUST FAN INLET. TYPICAL.
12. DISCHARGE OF KITCHEN EXHAUST FAN SHALL BE DISCHARGED AWAY FROM ROOF SURFACE AND SHALL AT MIN. 40" ABOVE ROOF SURFACE. THE EXHAUST OUTLET SHALL ALSO BE A MINIMUM OF TEN (10) FEET FROM ADJACENT BUILDINGS, PROPERTY LINES OR AIR INTAKES (THREE (3) FEET ABOVE ANY AIR INTAKE LOCATED WITHIN TEN (10) FEET IS ALLOWED) AND NOT LESS THAN FIVE (5) FEET FROM ANY COMBUSTIBLE STRUCTURE. TYPICAL.
13. ~~PACKAGED ROOFTOP HEAT PUMP UNIT ON FACTORY ROOF CURB. SEE EQUIPMENT SCHEDULE AND DETAILS FOR FURTHER REQUIREMENTS.~~
14. OUTLINE OF 10-FEET CLEARANCES FOR MECHANICAL OSA INTAKE. (4)
15. 12"Ø RESTROOM EXHAUST UP THRU ROOF AND TERMINATED WITH LISTED WEATHER HOOD.
16. 16"Ø RESTROOM EXHAUST UP THRU ROOF AND TERMINATED WITH LISTED WEATHER HOOD.
17. OFFSET MA RISER BELOW MAU BEFORE ROOF PENETRATION TO AVOID (E) STRUCTURAL MEMBERS. CONTRACTOR TO VERIFY EXACT BEAM LOCATION PRIOR TO INSTALL. TYPICAL OF ALL.

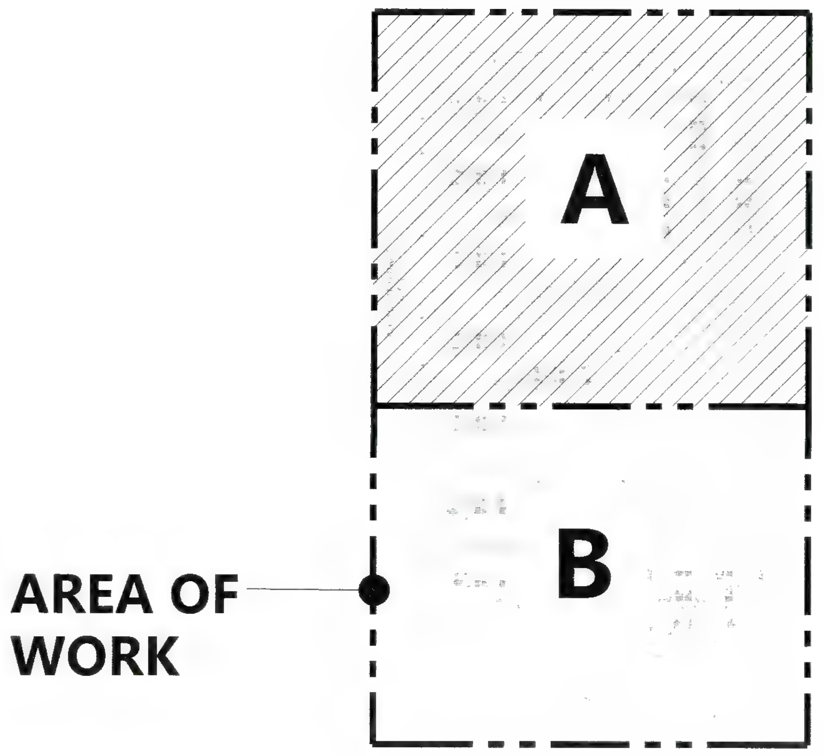

KEY MAP

SCALE: 1/32" = 1'-0"

CO-AR DESIGN, INC.
680 Brea Canyon Rd., Ste. 178
Diamond Bar, CA 91789

Office: 909-598-0186
http:\\www.coardesign.com

Dennis J. Lee, Architect
dennisl@coardesign.com

THESE DRAWINGS ARE THE PROPERTY OF THE ARCHITECT. THE DESIGNS SHOWN AND DESCRIBED HERIN INCLUDING ALL TECHNICAL DRAWINGS ARE PROPRIETARY AND CANNOT BE COPIED, DUPLICATED OR COMMERCIALLY EXPLOITED, IN WHOLE OR IN PART. THE DRAWINGS AND SPECIFICATIONS SHALL NOT BE USED BY THE OWNER ON OTHER PROJECTS, FOR ADDITIONS TO THIS PROJECT, OR FOR COMPLETION OF THIS PROJECT BY OTHERS. THE OWNER AGREES TO HOLD HARMLESS, INDEMNIFY AND DEFEND THE ARCHITECT AGAINST ALL DAMAGES, CLAIMS AND LOSSES, INCLUDING DEFENSE COSTS, ARISING OUT OF ANY REUSE OF THE PLANS AND SPECIFICATIONS WITHOUT THE WRITTEN AUTHORIZATION OF THE ARCHITECT OF RECORD.

COPYRIGHT © 2022 CO-AR DESIGN, INC. ALL RIGHTS RESERVED.

SEAL

NOTES

JHP Engineering and Design Services Inc.
3103 Independence Drive
Livermore, CA 94551
TEL: 925-409-2508
CEL: 510-468-0613
FAX: 510-788-6039

PROJECT

SALTALK FREMONT KITCHEN TENANT IMPROVEMENT

42550 ALBRAE ST.,
FREMONT, CA 94538

CLIENT

SALTALK, INC.
3334 VICTOR CT.,
SANTA CLARA, CA 95054

SUBMITTALS/ REVISIONS

1	HEALTH/USD SUBMITTAL	04/01/2022
2	2ND BLD. SUBMITTAL	07/22/2022
3	3RD BLD SUBMITTAL	08/30/2022
4	3RD USD. SUBMITTAL	09/01/2022
5	2ND HEALTH SUBMITTAL (4)	09/29/2022

PROJECT NO	21127
SCALE	AS SHOWN
DATE	2/10/2022
DRAWN BY	TL / YC
CHECKED BY	JP

SHEET TITLE

MECHANICAL ROOF PLAN - AREA B

SHEET NO

M-2.2

BIMcloud: COAR CONFERENCE - BIMcloud Basic for ARCHICAD 25/202201 Fremont Ghost Kitchen Thursday, February 10, 2022 1:47 PM

HOOD INFORMATION – JOB#5254633

HOOD NO	TAG	MODEL	MANUFACTURER	LENGTH	MAX COOKING TEMP	TYPE	APPLIANCE DUTY	DESIGN CFM/FT	TOTAL EXH CFM	EXHAUST PLENUM RISER(S)							TOTAL SUPPLY CFM	HOOD CONSTRUCTION	HOOD CONFIG	
										WIDTH	LENG	HEIGHT	DIA	CFM	VEL	SP			END TO END	ROW
1	K1	5424 EX-2-PSP-F	ECON-AIR	12' 0"	600 DEG	I	HEAVY	250	3000	12"	24"	4"		3000	1500	-0.403"	2700	430 SS WHERE EXPOSED	ALONE	ALONE
2	K2	5424 EX-2-PSP-F	ECON-AIR	12' 0"	600 DEG	I	HEAVY	250	3000	12"	24"	4"		3000	1500	-0.403"	2700	430 SS WHERE EXPOSED	ALONE	ALONE
3	K3	5424 EX-2-PSP-F	ECON-AIR	12' 0"	600 DEG	I	HEAVY	250	3000	12"	24"	4"		3000	1500	-0.403"	2700	430 SS WHERE EXPOSED	ALONE	ALONE
4	K4	5424 EX-2-PSP-F	ECON-AIR	12' 0"	600 DEG	I	HEAVY	250	3000	12"	24"	4"		3000	1500	-0.403"	2700	430 SS WHERE EXPOSED	ALONE	ALONE
5	K5	5424 EX-2-PSP-F	ECON-AIR	12' 0"	600 DEG	I	HEAVY	250	3000	12"	24"	4"		3000	1500	-0.403"	2700	430 SS WHERE EXPOSED	ALONE	ALONE
6	K6	5424 EX-2-PSP-F	ECON-AIR	12' 0"	600 DEG	I	HEAVY	250	3000	12"	24"	4"		3000	1500	-0.403"	2700	430 SS WHERE EXPOSED	ALONE	ALONE
7	K7	5424 EX-2-PSP-F	ECON-AIR	12' 0"	600 DEG	I	HEAVY	250	3000	12"	24"	4"		3000	1500	-0.403"	2700	430 SS WHERE EXPOSED	ALONE	ALONE
8	K8	5424 EX-2-PSP-F	ECON-AIR	12' 0"	600 DEG	I	HEAVY	250	3000	12"	24"	4"		3000	1500	-0.403"	2700	430 SS WHERE EXPOSED	ALONE	ALONE
9	K9	5424 EX-2-PSP-F	ECON-AIR	12' 0"	600 DEG	I	HEAVY	250	3000	12"	24"	4"		3000	1500	-0.403"	2700	430 SS WHERE EXPOSED	ALONE	ALONE
10	K10	5424 EX-2-PSP-F	ECON-AIR	12' 0"	600 DEG	I	HEAVY	250	3000	12"	24"	4"		3000	1500	-0.403"	2700	430 SS WHERE EXPOSED	ALONE	ALONE
11	K11	5424 EX-2-PSP-F	ECON-AIR	12' 0"	600 DEG	I	HEAVY	250	3000	12"	24"	4"		3000	1500	-0.403"	2700	430 SS WHERE EXPOSED	ALONE	ALONE
12	K12	5424 EX-2-PSP-F	ECON-AIR	12' 0"	600 DEG	I	HEAVY	250	3000	12"	24"	4"		3000	1500	-0.403"	2700	430 SS WHERE EXPOSED	ALONE	ALONE
13	K13	5424 EX-2-PSP-F	ECON-AIR	12' 0"	600 DEG	I	HEAVY	250	3000	12"	24"	4"		3000	1500	-0.403"	2700	430 SS WHERE EXPOSED	ALONE	ALONE
14	K14	5424 EX-2-PSP-F	ECON-AIR	12' 0"	600 DEG	I	HEAVY	250	3000	12"	24"	4"		3000	1500	-0.403"	2700	430 SS WHERE EXPOSED	ALONE	ALONE
15	K15	5424 EX-2-PSP-F	ECON-AIR	12' 0"	600 DEG	I	HEAVY	250	3000	12"	24"	4"		3000	1500	-0.403"	2700	430 SS WHERE EXPOSED	ALONE	ALONE
16	K16	5424 EX-2-PSP-F	ECON-AIR	12' 0"	600 DEG	I	HEAVY	250	3000	12"	24"	4"		3000	1500	-0.403"	2700	430 SS WHERE EXPOSED	ALONE	ALONE
17	K17	5424 EX-2-PSP-F	ECON-AIR	12' 0"	600 DEG	I	HEAVY	250	3000	12"	24"	4"		3000	1500	-0.403"	2700	430 SS WHERE EXPOSED	ALONE	ALONE
18	K18	5424 EX-2-PSP-F	ECON-AIR	12' 0"	600 DEG	I	HEAVY	250	3000	12"	24"	4"		3000	1500	-0.403"	2700	430 SS WHERE EXPOSED	ALONE	ALONE
19	K19	5424 EX-2-PSP-F	ECON-AIR	12' 0"	600 DEG	I	HEAVY	250	3000	12"	24"	4"		3000	1500	-0.403"	2700	430 SS WHERE EXPOSED	ALONE	ALONE
20	K20	5424 EX-2-PSP-F	ECON-AIR	12' 0"	600 DEG	I	HEAVY	250	3000	12"	24"	4"		3000	1500	-0.403"	2700	430 SS WHERE EXPOSED	ALONE	ALONE
21	K21	5424 EX-2-PSP-F	ECON-AIR	12' 0"	600 DEG	I	HEAVY	250	3000	12"	24"	4"		3000	1500	-0.403"	2700	430 SS WHERE EXPOSED	ALONE	ALONE
22	K22	5424 EX-2-PSP-F	ECON-AIR	12' 0"	600 DEG	I	HEAVY	250	3000	12"	24"	4"		3000	1500	-0.403"	2700	430 SS WHERE EXPOSED	ALONE	ALONE
23	K23	5424 EX-2-PSP-F	ECON-AIR	12' 0"	600 DEG	I	HEAVY	250	3000	12"	24"	4"		3000	1500	-0.403"	2700	430 SS WHERE EXPOSED	ALONE	ALONE
24	K24	5424 EX-2-PSP-F	ECON-AIR	14' 0"	600 DEG	I	HEAVY	250	3500	12"	28"	4"		3500	1500	-0.434"	3150	430 SS WHERE EXPOSED	ALONE	ALONE
25	K25	5424 EX-2-PSP-F	ECON-AIR	12' 0"	600 DEG	I	HEAVY	250	3000	12"	24"	4"		3000	1500	-0.403"	2700	430 SS WHERE EXPOSED	ALONE	ALONE
26	K26	5424 EX-2-PSP-F	ECON-AIR	12' 0"	600 DEG	I	HEAVY	250	3000	12"	24"	4"		3000	1500	-0.403"	2700	430 SS WHERE EXPOSED	ALONE	ALONE
27	K27	5424 EX-2-PSP-F	ECON-AIR	12' 0"	600 DEG	I	HEAVY	250	3000	12"	24"	4"		3000	1500	-0.403"	2700	430 SS WHERE EXPOSED	ALONE	ALONE
28	K28	5424 EX-2-PSP-F	ECON-AIR	14' 0"	600 DEG	I	HEAVY	250	3500	12"	28"	4"		3500	1500	-0.434"	3150	430 SS WHERE EXPOSED	ALONE	ALONE

HOOD CORNER
HANGING ANGLE
(HARDWARE BY INSTALLER)

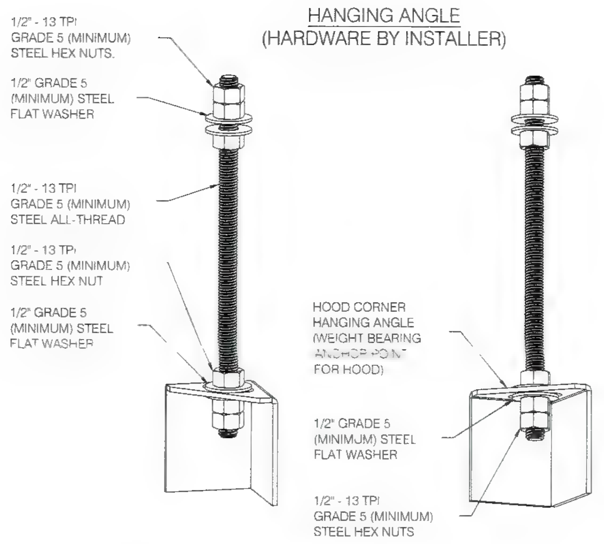

ASSEMBLY INSTRUCTIONS

HANGING ANGLE MUST BE SUPPORTED WITH 1/2" - 13 TPI GRADE 5 (MINIMUM) ALL-THREAD. SANDWICH HANGING ANGLES AND CEILING ANCHOR POINTS WITH 1/2" GRADE 5 (MINIMUM) STEEL FLAT WASHERS AND 1/2" - 13 TPI GRADE 5 (MINIMUM) HEX NUTS AS SHOWN. MUST USE DOUBLED HEX NUT CONFIGURATION BENEATH HOOD HANGING ANGLES AND ABOVE CEILING ANCHORS. MAINTAIN 1/4" OF EXPOSED THREADS BENEATH BOTTOM HEX NUT. TORQUE ALL HEX NUTS TO 57 FT-LBS.

FULL LENGTH
HANGING ANGLE
(HARDWARE BY INSTALLER)

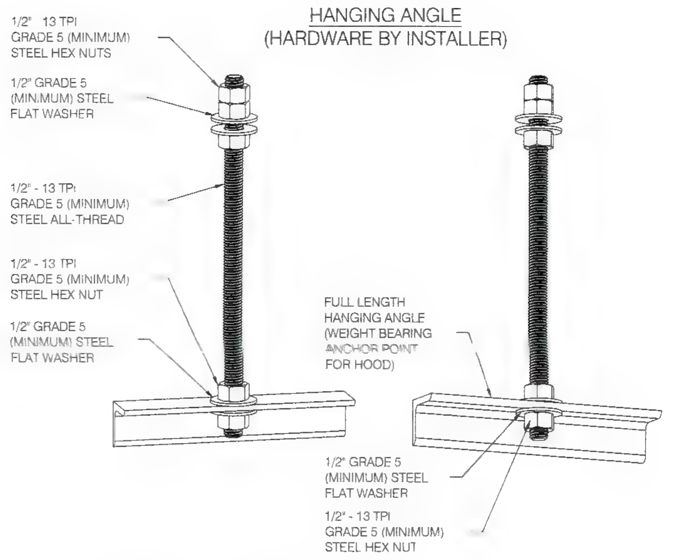

ASSEMBLY INSTRUCTIONS

HANGING ANGLE MUST BE SUPPORTED WITH 1/2" - 13 TPI GRADE 5 (MINIMUM) ALL-THREAD. SANDWICH HANGING ANGLES AND CEILING ANCHOR POINTS WITH 1/2" GRADE 5 (MINIMUM) STEEL FLAT WASHERS AND 1/2" - 13 TPI GRADE 5 (MINIMUM) HEX NUTS AS SHOWN. MUST USE DOUBLED HEX NUT CONFIGURATION ABOVE CEILING ANCHORS. SINGLE HEX NUT BENEATH HANGING ANGLE IS ACCEPTABLE FOR FULL LENGTH HANGING ANGLES. MAINTAIN 1/4" OF EXPOSED THREADS BENEATH BOTTOM HEX NUT. TORQUE ALL HEX NUTS TO 57 FT-LBS.

SUPPLY PLENUM
HANGING ANGLE
(HARDWARE BY INSTALLER)

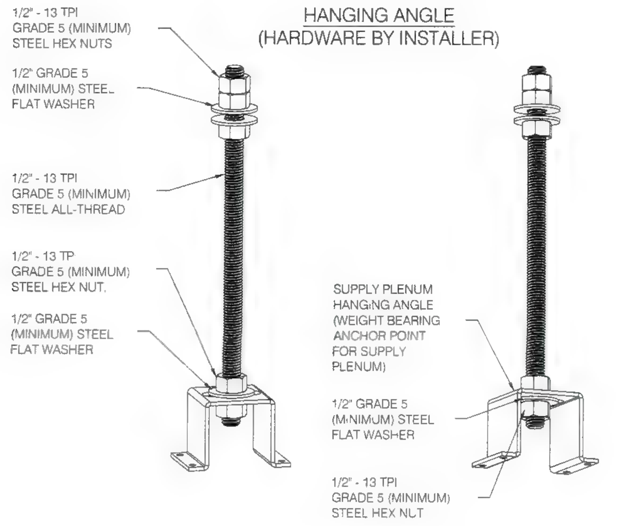

ASSEMBLY INSTRUCTIONS

HANGING ANGLE MUST BE SUPPORTED WITH 1/2" - 13 TPI GRADE 5 (MINIMUM) ALL-THREAD. SANDWICH HANGING ANGLES AND CEILING ANCHOR POINTS WITH 1/2" GRADE 5 (MINIMUM) STEEL FLAT WASHERS AND 1/2" - 13 TPI GRADE 5 (MINIMUM) HEX NUTS AS SHOWN. MUST USE DOUBLED HEX NUT CONFIGURATION ABOVE CEILING ANCHORS. SINGLE HEX NUT BENEATH HANGING ANGLE IS ACCEPTABLE FOR PSP HANGING ANGLES. MAINTAIN 1/4" OF EXPOSED THREADS BENEATH BOTTOM HEX NUT. TORQUE ALL HEX NUTS TO 57 FT-LBS.

Alameda County
Dept. of Environmental Health
Approved By: T. Tran

PATENT NUMBERS

AC-PSP (UNITED STATES) - US PATENT 7963830 B2.
AC-PSP WALL (CANADA) - CA PATENT 2820509.
AC-PSP ISLAND (CANADA) - CA PATENT 2520330.

FOR QUESTIONS, CALL THE CAPTIVE-AIRE SYSTEMS CENTRAL CALIFORNIA OFFICE

Region 91

8 ADRIAN COURT
BURLINGAME, CA 94010
PHONE: (415) 956-2200
EMAIL: REG91@CAPTIVEAIRE.COM

CAPTIVE-AIRE HOODS ARE BUILT IN COMPLIANCE WITH

NFPA #96
UL 710 & ULC710 STANDARDS
E.T.L. LISTED 3054804-001

CAPTRATE & KLEEN-GARD FILTERS ARE BUILT IN COMPLIANCE WITH

NFPA #96
NSF STANDARD #2
UL STANDARD #1046
INT. MECH. CODE (IMC)

BIMcloud: COAR-CONFERENCE - BIMcloud Basic for ARCHICAD 25/202201-Fremont Ghost Kitchen Thursday, February 10, 2022 1:47 PM.

REVISIONS

	DESCRIPTION	DATE:
△		
△		
△		
△		

econ·air
www.econair.com
Central CA
8 Adrian Court, Burlingame, CA, 94010 PHONE: (415) 956-2200 FAX: (919) 227-5940 EMAIL: reg91@econair.com

Saltalk Central Kitchen - Fremont, CA
42516 Albrae St,
Fremont, CA, 94538

DATE: 3/9/2022
DWG.#: 5254633
DRAWN BY: T.Thai
SCALE: 3/4" = 1'-0"
MASTER DRAWING
SHEET NO. 1

CO-AR DESIGN, INC.
680 Brea Canyon Rd., Ste. 178
Diamond Bar, CA 91789

Office: 909-598-0186
http:\\www.coardesign.com

Dennis J. Lee, Architect
dennisl@coardesign.com

THESE DRAWINGS ARE THE PROPERTY OF THE ARCHITECT. THE DESIGNS SHOWN AND DESCRIBED HERIN INCLUDING ALL TECHNICAL DRAWINGS ARE PROPRIETARY AND CANNOT BE COPIED, DUPLICATED OR COMMERCIALLY EXPLOITED, IN WHOLE OR IN PART. THE DRAWINGS AND SPECIFICATIONS SHALL NOT BE USED BY THE OWNER ON OTHER PROJECTS, FOR ADDITIONS TO THIS PROJECT, OR FOR COMPLETION OF THIS PROJECT BY OTHERS. THE OWNER AGREES TO HOLD HARMLESS, INDEMNIFY AND DEFEND THE ARCHITECT AGAINST ALL DAMAGES, CLAIMS AND LOSSES, INCLUDING DEFENSE COSTS, ARISING OUT OF ANY REUSE OF THE PLANS AND SPECIFICATIONS WITHOUT THE WRITTEN AUTHORIZATION OF THE ARCHITECT OF RECORD.

COPYRIGHT © 2022 CO-AR DESIGN, INC., ALL RIGHTS RESERVED.

SEAL

REGISTERED PROFESSIONAL ENGINEER
M35374
EXP. 6/30/23
MECHANICAL
STATE OF CALIFORNIA

NOTES

JHP Engineering and Design Services Inc.
3103 Independence Drive
Livermore, CA 94551
TEL: 925-409-2508
CEL: 510-468-0613
FAX: 510-788-6039

PROJECT
SALTALK FREMONT KITCHEN TENANT IMPROVEMENT

42550 ALBRAE ST.,
FREMONT, CA 94538

CLIENT

SALTALK, INC.
3334 VICTOR CT.,
SANTA CLARA, CA 95054

SUBMITTALS/ REVISIONS

1	HEALTH/USD SUBMITTAL	04/01/2022
2	2ND BLD. SUBMITTAL	07/22/2022
3	3RD BLD. SUBMITTAL	08/30/2022
4	3RD USD. SUBMITTAL	09/01/2022
5	2ND HEALTH SUBMITTAL	09/29/2022

PROJECT NO	21127
SCALE	AS SHOWN
DATE	2/10/2022
DRAWN BY	TL / YC
CHECKED BY	JP

SHEET TITLE
KITCHEN HOOD SCHEDULES

SHEET NO
M-3.0

HOOD INFORMATION

HOOD NO	TAG	FILTER(S) TYPE	FILTER(S) QTY	FILTER(S) HEIGHT	FILTER(S) LENGTH	FILTER(S) EFFICIENCY @ 7 MICRONS	LIGHT(S) QTY	LIGHT(S) TYPE	WIRE GUARD	UTILITY CABINET(S) LOCATION	UTILITY CABINET(S) SIZE	FIRE SYSTEM TYPE	FIRE SYSTEM SIZE	ELECTRICAL MODEL #	SWITCHES QUANTITY	FIRE SYSTEM PIPING	HOOD HANGING WEIGHT
1	K1	SS BAFFLE WITH HANDLES	9	20"	16"	30%	4	L55 SERIES E26	NO	LEFT	12"x54"x24"			SC-311110MA	1 LIGHT 1 FAN	NO	763 LBS
2	K2	SS BAFFLE WITH HANDLES	9	20"	16"	30%	4	L55 SERIES E26	NO	RIGHT	12"x54"x24"			SC-311110MA	1 LIGHT 1 FAN	NO	763 LBS
3	K3	SS BAFFLE WITH HANDLES	9	20"	16"	30%	4	L55 SERIES E26	NO	LEFT	12"x54"x24"			SC-311110MA	1 LIGHT 1 FAN	NO	763 LBS
4	K4	SS BAFFLE WITH HANDLES	9	20"	16"	30%	4	L55 SERIES E26	NO	RIGHT	12"x54"x24"			SC-311110MA	1 LIGHT 1 FAN	NO	763 LBS
5	K5	SS BAFFLE WITH HANDLES	9	20"	16"	30%	4	L55 SERIES E26	NO	LEFT	12"x54"x24"			SC-311110MA	1 LIGHT 1 FAN	NO	763 LBS
6	K6	SS BAFFLE WITH HANDLES	9	20"	16"	30%	4	L55 SERIES E26	NO	RIGHT	12"x54"x24"			SC-311110MA	1 LIGHT 1 FAN	NO	763 LBS
7	K7	SS BAFFLE WITH HANDLES	9	20"	16"	30%	4	L55 SERIES E26	NO	LEFT	12"x54"x24"			SC-311110MA	1 LIGHT 1 FAN	NO	763 LBS
8	K8	SS BAFFLE WITH HANDLES	9	20"	16"	30%	4	L55 SERIES E26	NO	RIGHT	12"x54"x24"			SC-311110MA	1 LIGHT 1 FAN	NO	763 LBS
9	K9	SS BAFFLE WITH HANDLES	9	20"	16"	30%	4	L55 SERIES E26	NO	LEFT	12"x54"x24"			SC-311110MA	1 LIGHT 1 FAN	NO	763 LBS
10	K10	SS BAFFLE WITH HANDLES	9	20"	16"	30%	4	L55 SERIES E26	NO	RIGHT	12"x54"x24"			SC-311110MA	1 LIGHT 1 FAN	NO	763 LBS
11	K11	SS BAFFLE WITH HANDLES	9	20"	16"	30%	4	L55 SERIES E26	NO	LEFT	12"x54"x24"			SC-311110MA	1 LIGHT 1 FAN	NO	763 LBS
12	K12	SS BAFFLE WITH HANDLES	9	20"	16"	30%	4	L55 SERIES E26	NO	RIGHT	12"x54"x24"			SC-311110MA	1 LIGHT 1 FAN	NO	763 LBS
13	K13	SS BAFFLE WITH HANDLES	9	20"	16"	30%	4	L55 SERIES E26	NO	LEFT	12"x54"x24"			SC-311110MA	1 LIGHT 1 FAN	NO	763 LBS
14	K14	SS BAFFLE WITH HANDLES	9	20"	16"	30%	4	L55 SERIES E26	NO	RIGHT	12"x54"x24"			SC-311110MA	1 LIGHT 1 FAN	NO	763 LBS
15	K15	SS BAFFLE WITH HANDLES	9	20"	16"	30%	4	L55 SERIES E26	NO	LEFT	12"x54"x24"			SC-311110MA	1 LIGHT 1 FAN	NO	763 LBS
16	K16	SS BAFFLE WITH HANDLES	9	20"	16"	30%	4	L55 SERIES E26	NO	RIGHT	12"x54"x24"			SC-311110MA	1 LIGHT 1 FAN	NO	763 LBS
17	K17	SS BAFFLE WITH HANDLES	9	20	16"	30%	4	L55 SERIES E26	NO	LEFT	12"x54"x24"			SC-311110MA	1 LIGHT 1 FAN	NO	763 LBS
18	K18	SS BAFFLE WITH HANDLES	9	20"	16'	30%	4	L55 SERIES E26	NO	RIGHT	12"x54"x24"			SC-311110MA	1 LIGHT 1 FAN	NO	763 LBS
19	K19	SS BAFFLE WITH HANDLES	9	20"	16"	30%	4	L55 SERIES E26	NO	LEFT	12"x54"x24"			SC-311110MA	1 LIGHT 1 FAN	NO	763 LBS
20	K20	SS BAFFLE WITH HANDLES	9	20"	16'	30%	4	L55 SERIES E26	NO	RIGHT	12"x54"x24"			SC-311110MA	1 LIGHT 1 FAN	NO	763 LBS
21	K21	SS BAFFLE WITH HANDLES	9	20"	16"	30%	4	L55 SERIES E26	NO	RIGHT	12"x54"x24"			SC-311110MA	1 LIGHT 1 FAN	NO	763 LBS
22	K22	SS BAFFLE WITH HANDLES	9	20"	16"	30%	4	L55 SERIES E26	NO	LEFT	12"x54"x24'			SC-311110MA	1 LIGHT 1 FAN	NO	763 LBS
23	K23	SS BAFFLE WITH HANDLES	9	20"	16"	30%	4	L55 SERIES E26	NO	RIGHT	12"x54"x24"			SC-311110MA	1 LIGHT 1 FAN	NO	763 LBS
24	K24	SS BAFFLE WITH HANDLES	10	20"	16"	30%	4	L55 SERIES E26	NO	LEFT	12"x54"x24"			SC-311110MA	1 LIGHT 1 FAN	NO	805 LBS
25	K25	SS BAFFLE WITH HANDLES	9	20'	16"	30%	4	L55 SERIES E26	NO	LEFT	12'x54"x24"			SC-311110MA	1 LIGHT 1 FAN	NO	763 LBS
26	K26	SS BAFFLE WITH HANDLES	9	20"	16"	30%	4	L55 SERIES E26	NO	RIGHT	12"x54"x24"			SC-311110MA	1 LIGHT 1 FAN	NO	763 LBS
27	K27	SS BAFFLE WITH HANDLES	9	20"	16"	30%	4	L55 SERIES E26	NO	LEFT	12'x54"x24"			SC-311110MA	1 LIGHT 1 FAN	NO	763 LBS
28	K28	SS BAFFLE WITH HANDLES	10	20"	16"	30%	4	L55 SERIES E26	NO							NO	740 LBS

Alameda County
Dept. of Environmental Health
Approved By: T. Tran

REVISIONS

	DESCRIPTION	DATE:
△		
△		
△		
△		

econ·air
www.econair.com
Central CA
8 Adrian Court, Burlingame, CA, 94010 PHONE: (415) 956-2200 FAX: (919) 227-5940 EMAIL: reg91@econair.com

Saltalk Central Kitchen - Fremont, CA
42516 Albrae St,
Fremont, CA, 94538

DATE: 3/9/2022

DWG.#: 5254633

DRAWN BY: T.Thai

SCALE: 3/4" = 1'-0"

MASTER DRAWING

SHEET NO. 2

CO-AR DESIGN, INC.
680 Brea Canyon Rd., Ste. 178
Diamond Bar, CA 91789

Office: 909-598-0186
http:\\www.coardesign.com

Dennis J. Lee, Architect
dennisl@coardesign.com

THESE DRAWINGS ARE THE PROPERTY OF THE ARCHITECT. THE DESIGNS SHOWN AND DESCRIBED HERIN INCLUDING ALL TECHNICAL DRAWINGS ARE PROPRIETARY AND CANNOT BE COPIED, DUPLICATED OR COMMERCIALLY EXPLOITED, IN WHOLE OR IN PART. THE DRAWINGS AND SPECIFICATIONS SHALL NOT BE USED BY THE OWNER ON OTHER PROJECTS, FOR ADDITIONS TO THIS PROJECT, OR FOR COMPLETION OF THIS PROJECT BY OTHERS. THE OWNER AGREES TO HOLD HARMLESS, INDEMNIFY AND DEFEND THE ARCHITECT AGAINST ALL DAMAGES, CLAIMS AND LOSSES, INCLUDING DEFENSE COSTS, ARISING OUT OF ANY REUSE OF THE PLANS AND SPECIFICATIONS WITHOUT THE WRITTEN AUTHORIZATION OF THE ARCHITECT OF RECORD.

COPYRIGHT © 2022 CO-AR DESIGN, INC., ALL RIGHTS RESERVED.

SEAL

REGISTERED PROFESSIONAL ENGINEER
JIA HUI PAN
M35374
EXP. 6/30/23
MECHANICAL
STATE OF CALIFORNIA

NOTES

JHP Engineering and Design Services Inc.
3103 Independence Drive
Livermore, CA 94551
TEL: 925-409-2508
CEL: 510-468-0613
FAX: 510-788-6039

PROJECT
SALTALK FREMONT KITCHEN TENANT IMPROVEMENT

42550 ALBRAE ST.,
FREMONT, CA 94538

CLIENT

SALTALK, INC.
3334 VICTOR CT.,
SANTA CLARA, CA 95054

SUBMITTALS/ REVISIONS

1	HEALTH/USD SUBMITTAL	04/01/2022
2	2ND BLD SUBMITTAL	07/22/2022
3	3RD BLD. SUBMITTAL	08/30/2022
4	3RD USD. SUBMITTAL	09/01/2022
5	2ND HEALTH SUBMITTAL	09/29/2022

PROJECT NO	21127
SCALE	AS SHOWN
DATE	2/10/2022
DRAWN BY	TL / YC
CHECKED BY	JP

SHEET TITLE
KITCHEN HOOD SCHEDULES

SHEET NO
M-3.1

BIMobject COAR CONFERENCE - BIMcloud Basic for ARCHICAD 25:202201 Fremont Ghost Kitchen Thursday, February 10, 2022 1:47 PM.

HOOD OPTIONS

HOOD NO	TAG	OPTION
1	K1	BACKSPLASH 80.00" HIGH X 157.00" LONG 430 SS VERTICAL.
		RIGHT SIDESPLASH 80.00" HIGH X 54.00" LONG 430 SS VERTICAL.
		RIGHT END STANDOFF (FINISHED) 1" WIDE 54" LONG INSULATED.
		LEFT VERTICAL END PANEL 27" TOP WIDTH, 21" BOTTOM WIDTH, 80" HIGH INSULATED 430 SS.
		RIGHT WALL AS END PANEL.
2	K2	BACKSPLASH 80.00" HIGH X 157.00" LONG 430 SS VERTICAL.
		LEFT SIDESPLASH 80.00" HIGH X 54.00" LONG 430 SS VERTICAL.
		LEFT END STANDOFF (FINISHED) 1" WIDE 54" LONG INSULATED.
		RIGHT VERTICAL END PANEL 27" TOP WIDTH, 21" BOTTOM WIDTH, 80" HIGH INSULATED 430 SS.
		LEFT WALL AS END PANEL.
3	K3	BACKSPLASH 80.00" HIGH X 157.00" LONG 430 SS VERTICAL.
		RIGHT SIDESPLASH 80.00" HIGH X 54.00" LONG 430 SS VERTICAL.
		RIGHT END STANDOFF (FINISHED) 1" WIDE 54" LONG INSULATED.
		LEFT VERTICAL END PANEL 27" TOP WIDTH, 21" BOTTOM WIDTH, 80" HIGH INSULATED 430 SS.
		RIGHT WALL AS END PANEL.
4	K4	BACKSPLASH 80.00" HIGH X 157.00" LONG 430 SS VERTICAL.
		LEFT SIDESPLASH 80.00" HIGH X 54.00" LONG 430 SS VERTICAL.
		LEFT END STANDOFF (FINISHED) 1" WIDE 54" LONG INSULATED.
		RIGHT VERTICAL END PANEL 27" TOP WIDTH, 21" BOTTOM WIDTH, 80" HIGH INSULATED 430 SS.
		LEFT WALL AS END PANEL.
5	K5	BACKSPLASH 80.00" HIGH X 157.00" LONG 430 SS VERTICAL.
		RIGHT SIDESPLASH 80.00" HIGH X 54.00" LONG 430 SS VERTICAL.
		RIGHT END STANDOFF (FINISHED) 1" WIDE 54" LONG INSULATED.
		LEFT VERTICAL END PANEL 27" TOP WIDTH, 21" BOTTOM WIDTH, 80" HIGH INSULATED 430 SS.
		RIGHT WALL AS END PANEL.
6	K6	BACKSPLASH 80.00" HIGH X 157.00" LONG 430 SS VERTICAL.
		LEFT SIDESPLASH 80.00" HIGH X 54.00" LONG 430 SS VERTICAL.
		LEFT END STANDOFF (FINISHED) 1" WIDE 54" LONG INSULATED.
		RIGHT VERTICAL END PANEL 27" TOP WIDTH, 21" BOTTOM WIDTH, 80" HIGH INSULATED 430 SS.
		LEFT WALL AS END PANEL.
7	K7	BACKSPLASH 80.00" HIGH X 157.00" LONG 430 SS VERTICAL.
		RIGHT SIDESPLASH 80.00" HIGH X 54.00" LONG 430 SS VERTICAL.
		RIGHT END STANDOFF (FINISHED) 1" WIDE 54" LONG INSULATED.
		LEFT VERTICAL END PANEL 27" TOP WIDTH, 21" BOTTOM WIDTH, 80" HIGH INSULATED 430 SS.
		RIGHT WALL AS END PANEL.
8	K8	BACKSPLASH 80.00" HIGH X 157.00" LONG 430 SS VERTICAL.
		LEFT SIDESPLASH 80.00" HIGH X 54.00" LONG 430 SS VERTICAL.
		LEFT END STANDOFF (FINISHED) 1" WIDE 54" LONG INSULATED.
		RIGHT VERTICAL END PANEL 27" TOP WIDTH, 21" BOTTOM WIDTH, 80" HIGH INSULATED 430 SS.
		LEFT WALL AS END PANEL.
9	K9	BACKSPLASH 80.00" HIGH X 157.00" LONG 430 SS VERTICAL.
		RIGHT SIDESPLASH 80.00" HIGH X 54.00" LONG 430 SS VERTICAL.
		RIGHT END STANDOFF (FINISHED) 1" WIDE 54" LONG INSULATED.
		LEFT VERTICAL END PANEL 27" TOP WIDTH, 21" BOTTOM WIDTH, 80" HIGH INSULATED 430 SS.
		RIGHT WALL AS END PANEL.
10	K10	BACKSPLASH 80.00" HIGH X 157.00" LONG 430 SS VERTICAL.
		LEFT SIDESPLASH 80.00" HIGH X 54.00" LONG 430 SS VERTICAL.
		LEFT END STANDOFF (FINISHED) 1" WIDE 54" LONG INSULATED.
		RIGHT VERTICAL END PANEL 27" TOP WIDTH, 21" BOTTOM WIDTH, 80" HIGH INSULATED 430 SS.
		LEFT WALL AS END PANEL.
11	K11	BACKSPLASH 80.00" HIGH X 157.00" LONG 430 SS VERTICAL.
		RIGHT SIDESPLASH 80.00" HIGH X 54.00" LONG 430 SS VERTICAL.
		RIGHT END STANDOFF (FINISHED) 1" WIDE 54" LONG INSULATED.
		LEFT VERTICAL END PANEL 27" TOP WIDTH, 21" BOTTOM WIDTH, 80" HIGH INSULATED 430 SS.
		RIGHT WALL AS END PANEL.
12	K12	BACKSPLASH 80.00" HIGH X 157.00" LONG 430 SS VERTICAL.
		LEFT SIDESPLASH 80.00" HIGH X 54.00" LONG 430 SS VERTICAL.
		LEFT END STANDOFF (FINISHED) 1" WIDE 54" LONG INSULATED.
		RIGHT VERTICAL END PANEL 27" TOP WIDTH, 21" BOTTOM WIDTH, 80" HIGH INSULATED 430 SS.
		LEFT WALL AS END PANEL.
13	K13	BACKSPLASH 80.00" HIGH X 157.00" LONG 430 SS VERTICAL.
		RIGHT SIDESPLASH 80.00" HIGH X 54.00" LONG 430 SS VERTICAL.
		RIGHT END STANDOFF (FINISHED) 1" WIDE 54" LONG INSULATED.
		LEFT VERTICAL END PANEL 27" TOP WIDTH, 21" BOTTOM WIDTH, 80" HIGH INSULATED 430 SS.
		RIGHT WALL AS END PANEL.
14	K14	BACKSPLASH 80.00" HIGH X 157.00" LONG 430 SS VERTICAL.
		LEFT SIDESPLASH 80.00" HIGH X 54.00" LONG 430 SS VERTICAL.
		LEFT END STANDOFF (FINISHED) 1" WIDE 54" LONG INSULATED.
		RIGHT VERTICAL END PANEL 27" TOP WIDTH, 21" BOTTOM WIDTH, 80" HIGH INSULATED 430 SS.
		LEFT WALL AS END PANEL.
15	K15	BACKSPLASH 80.00" HIGH X 157.00" LONG 430 SS VERTICAL.
		RIGHT SIDESPLASH 80.00" HIGH X 54.00" LONG 430 SS VERTICAL.
		RIGHT END STANDOFF (FINISHED) 1" WIDE 54" LONG INSULATED.
		LEFT VERTICAL END PANEL 27" TOP WIDTH, 21" BOTTOM WIDTH, 80" HIGH INSULATED 430 SS.
		RIGHT WALL AS END PANEL.
16	K16	BACKSPLASH 80.00" HIGH X 157.00" LONG 430 SS VERTICAL.
		LEFT SIDESPLASH 80.00" HIGH X 54.00" LONG 430 SS VERTICAL.
		LEFT END STANDOFF (FINISHED) 1" WIDE 54" LONG INSULATED.
		RIGHT VERTICAL END PANEL 27" TOP WIDTH, 21" BOTTOM WIDTH, 80" HIGH INSULATED 430 SS.
		LEFT WALL AS END PANEL.
17	K17	BACKSPLASH 80.00" HIGH X 157.00" LONG 430 SS VERTICAL.
		RIGHT SIDESPLASH 80.00" HIGH X 54.00" LONG 430 SS VERTICAL.
		RIGHT END STANDOFF (FINISHED) 1" WIDE 54" LONG INSULATED.
		LEFT VERTICAL END PANEL 27" TOP WIDTH, 21" BOTTOM WIDTH, 80" HIGH INSULATED 430 SS.
		RIGHT WALL AS END PANEL.
18	K18	BACKSPLASH 80.00" HIGH X 157.00" LONG 430 SS VERTICAL.
		LEFT SIDESPLASH 80.00" HIGH X 54.00" LONG 430 SS VERTICAL.
		LEFT END STANDOFF (FINISHED) 1" WIDE 54" LONG INSULATED.
		RIGHT VERTICAL END PANEL 27" TOP WIDTH, 21" BOTTOM WIDTH, 80" HIGH INSULATED 430 SS.
		LEFT WALL AS END PANEL.
19	K19	BACKSPLASH 80.00" HIGH X 157.00" LONG 430 SS VERTICAL.
		RIGHT SIDESPLASH 80.00" HIGH X 54.00" LONG 430 SS VERTICAL.
		RIGHT END STANDOFF (FINISHED) 1" WIDE 54" LONG INSULATED.
		LEFT VERTICAL END PANEL 27" TOP WIDTH, 21" BOTTOM WIDTH, 80" HIGH INSULATED 430 SS.
		RIGHT WALL AS END PANEL.
20	K20	BACKSPLASH 80.00" HIGH X 157.00" LONG 430 SS VERTICAL.
		LEFT SIDESPLASH 80.00" HIGH X 54.00" LONG 430 SS VERTICAL.
		LEFT END STANDOFF (FINISHED) 1" WIDE 54" LONG INSULATED.
		RIGHT VERTICAL END PANEL 27" TOP WIDTH, 21" BOTTOM WIDTH, 80" HIGH INSULATED 430 SS.
		LEFT WALL AS END PANEL.
21	K21	BACKSPLASH 80.00" HIGH X 157.00" LONG 430 SS VERTICAL.
		LEFT SIDESPLASH 80.00" HIGH X 54.00" LONG 430 SS VERTICAL.
		LEFT END STANDOFF (FINISHED) 1" WIDE 54" LONG INSULATED.
		RIGHT VERTICAL END PANEL 27" TOP WIDTH, 21" BOTTOM WIDTH, 80" HIGH INSULATED 430 SS.
		LEFT WALL AS END PANEL.
22	K22	BACKSPLASH 80.00" HIGH X 157.00" LONG 430 SS VERTICAL.
		RIGHT SIDESPLASH 80.00" HIGH X 54.00" LONG 430 SS VERTICAL.
		RIGHT END STANDOFF (FINISHED) 1" WIDE 54" LONG INSULATED.
		LEFT VERTICAL END PANEL 27" TOP WIDTH, 21" BOTTOM WIDTH, 80" HIGH INSULATED 430 SS.
		RIGHT WALL AS END PANEL.
23	K23	BACKSPLASH 80.00" HIGH X 157.00" LONG 430 SS VERTICAL.
		LEFT SIDESPLASH 80.00" HIGH X 54.00" LONG 430 SS VERTICAL.
		LEFT END STANDOFF (FINISHED) 1" WIDE 54" LONG INSULATED.
		RIGHT VERTICAL END PANEL 27" TOP WIDTH, 21" BOTTOM WIDTH, 80" HIGH INSULATED 430 SS.
		LEFT WALL AS END PANEL.
24	K24	BACKSPLASH 80.00" HIGH X 181.00" LONG 430 SS VERTICAL.
		RIGHT SIDESPLASH 80.00" HIGH X 54.00" LONG 430 SS VERTICAL.
		RIGHT END STANDOFF (FINISHED) 1" WIDE 54" LONG INSULATED.
		LEFT VERTICAL END PANEL 27" TOP WIDTH, 21" BOTTOM WIDTH, 80" HIGH INSULATED 430 SS.
		RIGHT WALL AS END PANEL.
25	K25	BACKSPLASH 80.00" HIGH X 157.00" LONG 430 SS VERTICAL.
		RIGHT SIDESPLASH 80.00" HIGH X 54.00" LONG 430 SS VERTICAL.
		RIGHT END STANDOFF (FINISHED) 1" WIDE 54" LONG INSULATED.
		LEFT VERTICAL END PANEL 27" TOP WIDTH, 21" BOTTOM WIDTH, 80" HIGH INSULATED 430 SS.
		RIGHT WALL AS END PANEL.
26	K26	BACKSPLASH 80.00" HIGH X 157.00" LONG 430 SS VERTICAL.
		LEFT SIDESPLASH 80.00" HIGH X 54.00" LONG 430 SS VERTICAL.
		LEFT END STANDOFF (FINISHED) 1" WIDE 54" LONG INSULATED.
		RIGHT VERTICAL END PANEL 27" TOP WIDTH, 21" BOTTOM WIDTH, 80" HIGH INSULATED 430 SS.
		LEFT WALL AS END PANEL.
27	K27	BACKSPLASH 80.00" HIGH X 157.00" LONG 430 SS VERTICAL.
		RIGHT SIDESPLASH 80.00" HIGH X 54.00" LONG 430 SS VERTICAL.
		RIGHT END STANDOFF (FINISHED) 1" WIDE 54" LONG INSULATED.
		LEFT VERTICAL END PANEL 27" TOP WIDTH, 21" BOTTOM WIDTH, 80" HIGH INSULATED 430 SS.
		RIGHT WALL AS END PANEL.
28	K28	BACKSPLASH 80.00" HIGH X 169.00" LONG 430 SS VERTICAL.
		LEFT SIDESPLASH 80.00" HIGH X 54.00" LONG 430 SS VERTICAL.
		LEFT END STANDOFF (FINISHED) 1" WIDE 54" LONG INSULATED.
		RIGHT VERTICAL END PANEL 27" TOP WIDTH, 21" BOTTOM WIDTH, 80" HIGH INSULATED 430 SS.
		LEFT WALL AS END PANEL.

PERFORATED SUPPLY PLENUM(S)

HOOD NO	TAG	POS	LENGTH	WIDTH	HEIGHT	TYPE	RISER(S)				
							WIDTH	LENG	DIA	CFM	SP
1	K1	Front	157"	18"	6"	MUA	12"	28"		1000	0.297"
						MUA	12"	28"		1000	0.297"
						MUA	12"	28"		1000	0.297"
2	K2	Front	157"	18"	6"	MUA	12"	28"		1000	0.297"
						MUA	12"	28"		1000	0.297"
						MUA	12"	28"		1000	0.297"
3	K3	Front	157"	18"	6"	MUA	12"	28"		1000	0.297"
						MUA	12"	28"		1000	0.297"
						MUA	12"	28"		1000	0.297"
4	K4	Front	157"	18"	6"	MUA	12"	28"		1000	0.297"
						MUA	12"	28"		1000	0.297"
						MUA	12"	28"		1000	0.297"
5	K5	Front	157"	18"	6"	MUA	12"	28"		1000	0.297"
						MUA	12"	28"		1000	0.297"
						MUA	12"	28"		1000	0.297"
6	K6	Front	157"	18"	6"	MUA	12"	28"		1000	0.297"
						MUA	12"	28"		1000	0.297"
						MUA	12"	28"		1000	0.297"
7	K7	Front	157"	18"	6"	MUA	12"	28"		1000	0.297"
						MUA	12"	28"		1000	0.297"
						MUA	12"	28"		1000	0.297"
8	K8	Front	157"	18"	6"	MUA	12"	28"		1000	0.297"
						MUA	12"	28"		1000	0.297"
						MUA	12"	28"		1000	0.297"
9	K9	Front	157"	18"	6"	MUA	12"	28"		1000	0.297"
						MUA	12"	28"		1000	0.297"
						MUA	12"	28"		1000	0.297"
10	K10	Front	157"	18"	6"	MUA	12"	28"		1000	0.297"
						MUA	12"	28"		1000	0.297"
						MUA	12"	28"		1000	0.297"
11	K11	Front	157"	18"	6"	MUA	12"	28"		1000	0.297"
						MUA	12"	28"		1000	0.297"
						MUA	12"	28"		1000	0.297"
12	K12	Front	157"	18"	6"	MUA	12"	28"		1000	0.297"
						MUA	12"	28"		1000	0.297"
						MUA	12"	28"		1000	0.297"
13	K13	Front	157"	18"	6"	MUA	12"	28"		1000	0.297"
						MUA	12"	28"		1000	0.297"
						MUA	12"	28"		1000	0.297"
14	K14	Front	157"	18"	6"	MUA	12"	28"		1000	0.297"
						MUA	12"	28"		1000	0.297"
						MUA	12"	28"		1000	0.297"
15	K15	Front	157"	18"	6"	MUA	12"	28"		1000	0.297"
						MUA	12"	28"		1000	0.297"
						MUA	12"	28"		1000	0.297"
16	K16	Front	157"	18"	6"	MUA	12"	28"		1000	0.297"
						MUA	12"	28"		1000	0.297"
						MUA	12"	28"		1000	0.297"
17	K17	Front	157"	18"	6"	MUA	12"	28"		1000	0.297"
						MUA	12"	28"		1000	0.297"
						MUA	12"	28"		1000	0.297"
18	K18	Front	157"	18"	6"	MUA	12"	28"		1000	0.297"
						MUA	12"	28"		1000	0.297"
						MUA	12"	28"		1000	0.297"
19	K19	Front	157"	18"	6"	MUA	12"	28"		1000	0.297"
						MUA	12"	28"		1000	0.297"
						MUA	12"	28"		1000	0.297"
20	K20	Front	157"	18"	6"	MUA	12"	28"		1000	0.297"
						MUA	12"	28"		1000	0.297"
						MUA	12"	28"		1000	0.297"
21	K21	Front	157"	18"	6"	MUA	12"	28"		1000	0.297"
						MUA	12"	28"		1000	0.297"
						MUA	12"	28"		1000	0.297"
22	K22	Front	157"	18"	6"	MUA	12"	28"		1000	0.297"
						MUA	12"	28"		1000	0.297"
						MUA	12"	28"		1000	0.297"
23	K23	Front	157"	18"	6"	MUA	12"	28"		1000	0.297"
						MUA	12"	28"		1000	0.297"
						MUA	12"	28"		1000	0.297"
24	K24	Front	181"	18"	6"	MUA	12"	24"		875	0.269"
						MUA	12"	24"		875	0.269"
						MUA	12"	24"		875	0.269"
						MUA	12"	24"		875	0.269"
25	K25	Front	157"	18"	6"	MUA	12"	28"		1000	0.297"
						MUA	12"	28"		1000	0.297"
						MUA	12"	28"		1000	0.297"
26	K26	Front	157"	18"	6"	MUA	12"	28"		1000	0.297"
						MUA	12"	28"		1000	0.297"
						MUA	12"	28"		1000	0.297"
27	K27	Front	157"	18"	6"	MUA	12"	28"		1000	0.297"
						MUA	12"	28"		1000	0.297"
						MUA	12"	28"		1000	0.297"
28	K28	Front	169"	20"	6"	MUA	12"	28"		875	0.231"
						MUA	12"	28"		875	0.231"
						MUA	12"	28"		875	0.231"
						MUA	12"	28"		875	0.231"

Alameda County
Dept. of Environmental Health
Approved By: T. Tran

REVISIONS

	DESCRIPTION	DATE:
△		
△		
△		
△		

econ·air
Central CA
www.econair.com
8 Adrian Court, Burlingame, CA, 94010 PHONE: (415) 956-2200 FAX: (919) 227-5940 EMAIL: reg91@econair.com

Saltalk Central Kitchen - Fremont, CA
42516 Albrae St,
Fremont, CA, 94538

DATE: 3/9/2022

DWG.#: 5254633

DRAWN BY: T.Thai

SCALE: 3/4" = 1'-0"

MASTER DRAWING

SHEET NO. 3

CO-AR DESIGN, INC.
680 Brea Canyon Rd., Ste. 178
Diamond Bar, CA 91789

Office: 909-598-0186
http:\\www.coardesign.com

Dennis J. Lee, Architect
dennisl@coardesign.com

THESE DRAWINGS ARE THE PROPERTY OF THE ARCHITECT. THE DESIGNS SHOWN AND DESCRIBED HERIN INCLUDING ALL TECHNICAL DRAWINGS ARE PROPRIETARY AND CANNOT BE COPIED, DUPLICATED OR COMMERCIALLY EXPLOITED, IN WHOLE OR IN PART. THE DRAWINGS AND SPECIFICATIONS SHALL NOT BE USED BY THE OWNER ON OTHER PROJECTS, FOR ADDITIONS TO THIS PROJECT, OR FOR COMPLETION OF THIS PROJECT BY OTHERS. THE OWNER AGREES TO HOLD HARMLESS, INDEMNIFY AND DEFEND THE ARCHITECT AGAINST ALL DAMAGES, CLAIMS AND LOSSES, INCLUDING DEFENSE COSTS, ARISING OUT OF ANY REUSE OF THE PLANS AND SPECIFICATIONS WITHOUT THE WRITTEN AUTHORIZATION OF THE ARCHITECT OF RECORD.

COPYRIGHT © 2022 CO-AR DESIGN, INC., ALL RIGHTS RESERVED.

SEAL:

REGISTERED PROFESSIONAL ENGINEER
JIA HUI PAN
M35374
EXP. 6/30/23
MECHANICAL
STATE OF CALIFORNIA

NOTES:

JHP Engineering and Design Services Inc.
3103 Independence Drive
Livermore, CA 94551
TEL: 925-409-2508
CEL: 510-468-0613
FAX: 510-788-6039

PROJECT:
SALTALK FREMONT KITCHEN TENANT IMPROVEMENT

42550 ALBRAE ST.,
FREMONT, CA 94538

CLIENT:

SALTALK, INC.
3334 VICTOR CT.,
SANTA CLARA, CA 95054

SUBMITTALS/ REVISIONS:

1	HEALTH/USD SUBMITTAL	04/01/2022
2	2ND BLD. SUBMITTAL	07/22/2022
3	3RD BLD. SUBMITTAL	08/30/2022
4	3RD USD. SUBMITTAL	09/01/2022
5	2ND HEALTH SUBMITTAL	09/29/2022

PROJECT NO:	21127
SCALE:	AS SHOWN
DATE:	2/10/2022
DRAWN BY:	TL / YC
CHECKED BY:	JP

SHEET TITLE
KITCHEN HOOD OPTIONS

SHEET NO
M-3.2

BIMcloud: COAR CONFERENCE - BIMcloud Basic for ARCHICAD 25/202201-Fremont-Ghost Kitchen Thursday, February 10, 2022 1:47 PM

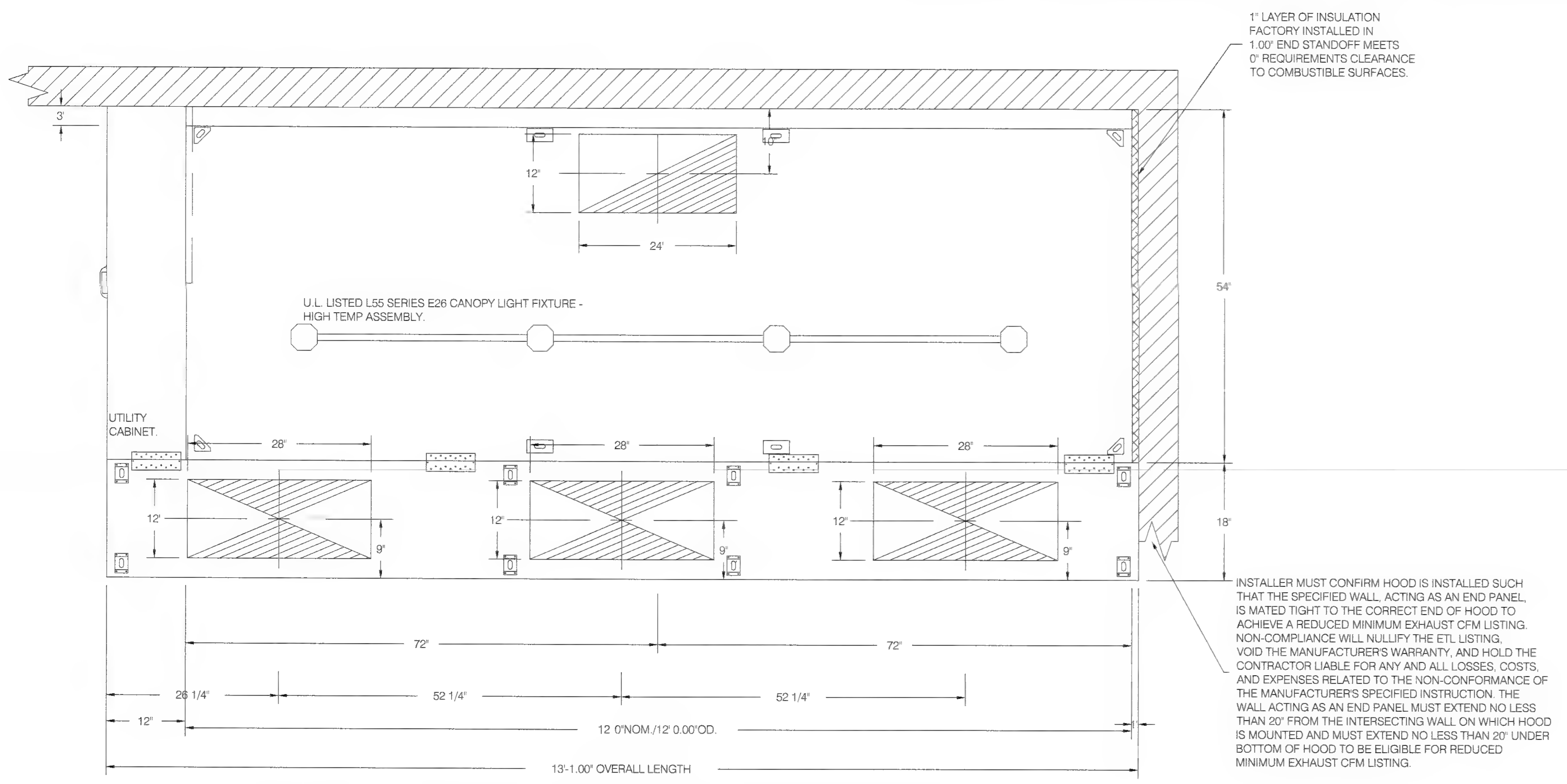

PLAN VIEW - HOOD #1 (K1), #3 (K3), #5 (K5), #7 (K7), #9 (K9), #11 (K11), #13 (K13), #15 (K15), #17 (K17), #19 (K19), #22 (K22), #25 (K25), #27 (K27)
12' 0.00" LONG 5424EX-2-PSP-F
NOTE: ADDITIONAL HANGING ANGLES PROVIDED FOR HOODS 12' AND LONGER.

GENERAL NOTES:

ALL TYPE-I GREASE DUCT SHALL BE TESTED ON GROUND PRIOR TO INSTALL

1

Alameda County
Dept. of Environmental Health
Approved By: T. Tran

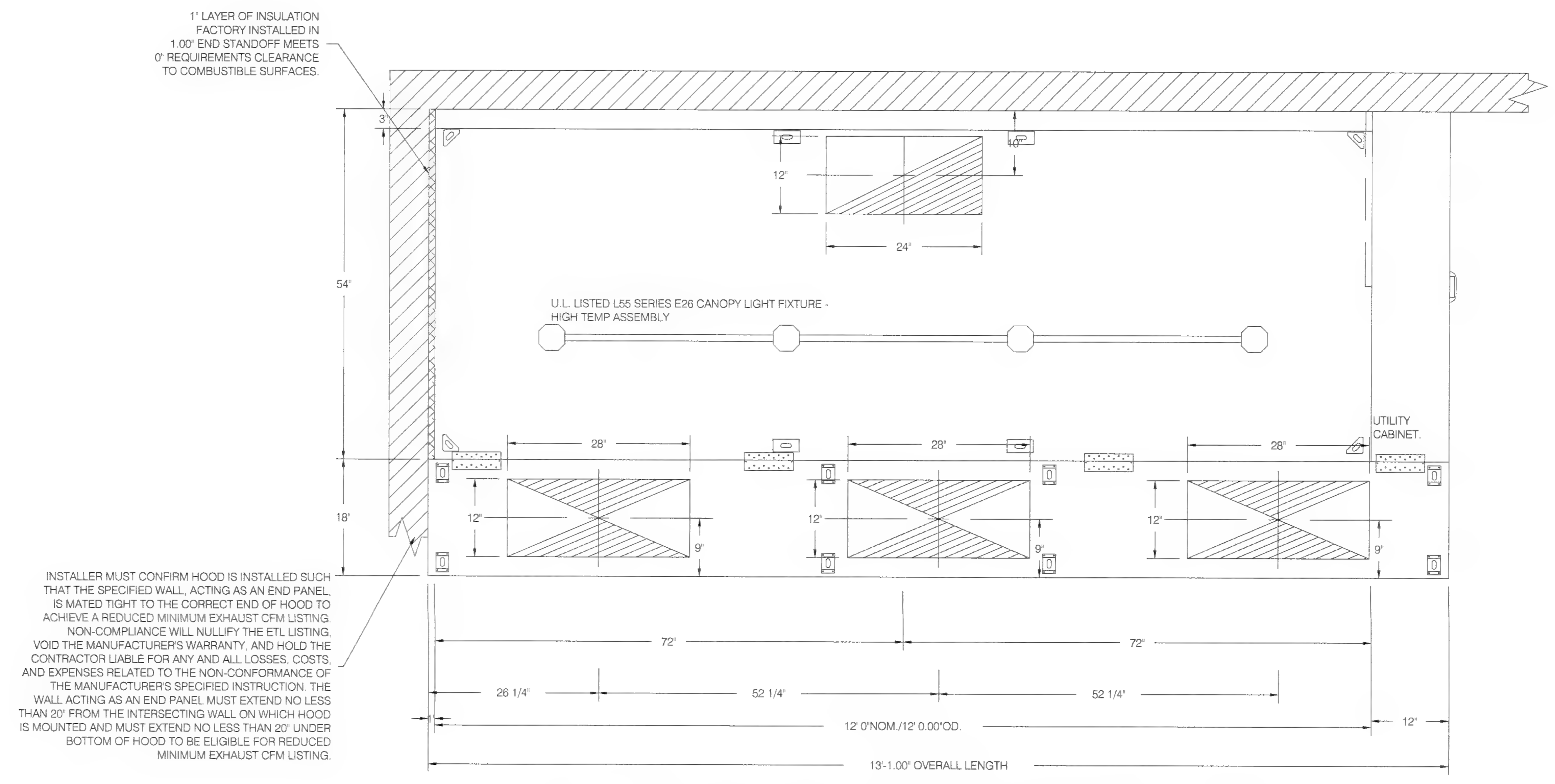

PLAN VIEW - HOOD #2 (K2), #4 (K4), #6 (K6), #8 (K8), #10 (K10), #12 (K12), #14 (K14), #16 (K16), #18 (K18), #20 (K20), #21 (K21), #23 (K23), #26 (K26)
12' 0.00" LONG 5424EX-2-PSP-F
NOTE: ADDITIONAL HANGING ANGLES PROVIDED FOR HOODS 12' AND LONGER.

REVISIONS

DESCRIPTION	DATE

econ·air
www.econair.com
Central CA
8 Adrian Court, Burlingame, CA, 94010 PHONE: (415) 956-2200 FAX: (919) 227-5940 EMAIL: reg91@econair.com

Saltalk Central Kitchen - Fremont, CA
42516 Albrae St,
Fremont, CA, 94538

DATE: 3/9/2022

DWG.#: 5254633

DRAWN BY: T.Thai

SCALE: 3/4" = 1'-0"

MASTER DRAWING

SHEET NO. 4

CO-AR DESIGN, INC.
680 Brea Canyon Rd., Ste. 178
Diamond Bar, CA 91789

Office: 909-598-0186
http:\\www.coardesign.com

Dennis J. Lee, Architect
dennisl@coardesign.com

THESE DRAWINGS ARE THE PROPERTY OF THE ARCHITECT. THE DESIGNS SHOWN AND DESCRIBED HERIN INCLUDING ALL TECHNICAL DRAWINGS ARE PROPRIETARY AND CANNOT BE COPIED, DUPLICATED OR COMMERCIALLY EXPLOITED, IN WHOLE OR IN PART. THE DRAWINGS AND SPECIFICATIONS SHALL NOT BE USED BY THE OWNER ON OTHER PROJECTS, FOR ADDITIONS TO THIS PROJECT, OR FOR COMPLETION OF THIS PROJECT BY OTHERS. THE OWNER AGREES TO HOLD HARMLESS, INDEMNIFY AND DEFEND THE ARCHITECT AGAINST ALL DAMAGES, CLAIMS AND LOSSES, INCLUDING DEFENSE COSTS, ARISING OUT OF ANY REUSE OF THE PLANS AND SPECIFICATIONS WITHOUT THE WRITTEN AUTHORIZATION OF THE ARCHITECT OF RECORD.

COPYRIGHT © 2022 CO-AR DESIGN, INC., ALL RIGHTS RESERVED.

SEAL:

REGISTERED PROFESSIONAL ENGINEER
JIA HUI PAN
M35374
EXP. 6/30/23
MECHANICAL
STATE OF CALIFORNIA

NOTES:

JHP Engineering and Design Services Inc.
3103 Independence Drive
Livermore, CA 94551
TEL: 925-409-2508
CEL: 510-468-0613
FAX: 510-788-6039

PROJECT
SALTALK FREMONT KITCHEN TENANT IMPROVEMENT

42550 ALBRAE ST.,
FREMONT, CA 94538

CLIENT

SALTALK, INC.
3334 VICTOR CT.,
SANTA CLARA, CA 95054

SUBMITTALS/ REVISIONS

1	HEALTH/USD SUBMITTAL	04/01/2022
2	2ND BLD. SUBMITTAL 1	07/22/2022
3	3RD BLD. SUBMITTAL	08/30/2022
4	3RD USD. SUBMITTAL	09/01/2022
5	2ND HEALTH SUBMITTAL	09/29/2022

PROJECT NO	21127
SCALE	AS SHOWN
DATE	2/10/2022
DRAWN BY	TL / YC
CHECKED BY	JP

SHEET TITLE
KITCHEN HOOD DRAWINGS

SHEET NO
M-3.3

BIMcloud: COAR-CONFERENCE - BIMcloud Basic for ARCHICAD 25/202201 Fremont Ghost Kitchen Thursday, February 10, 2022 1:47 PM

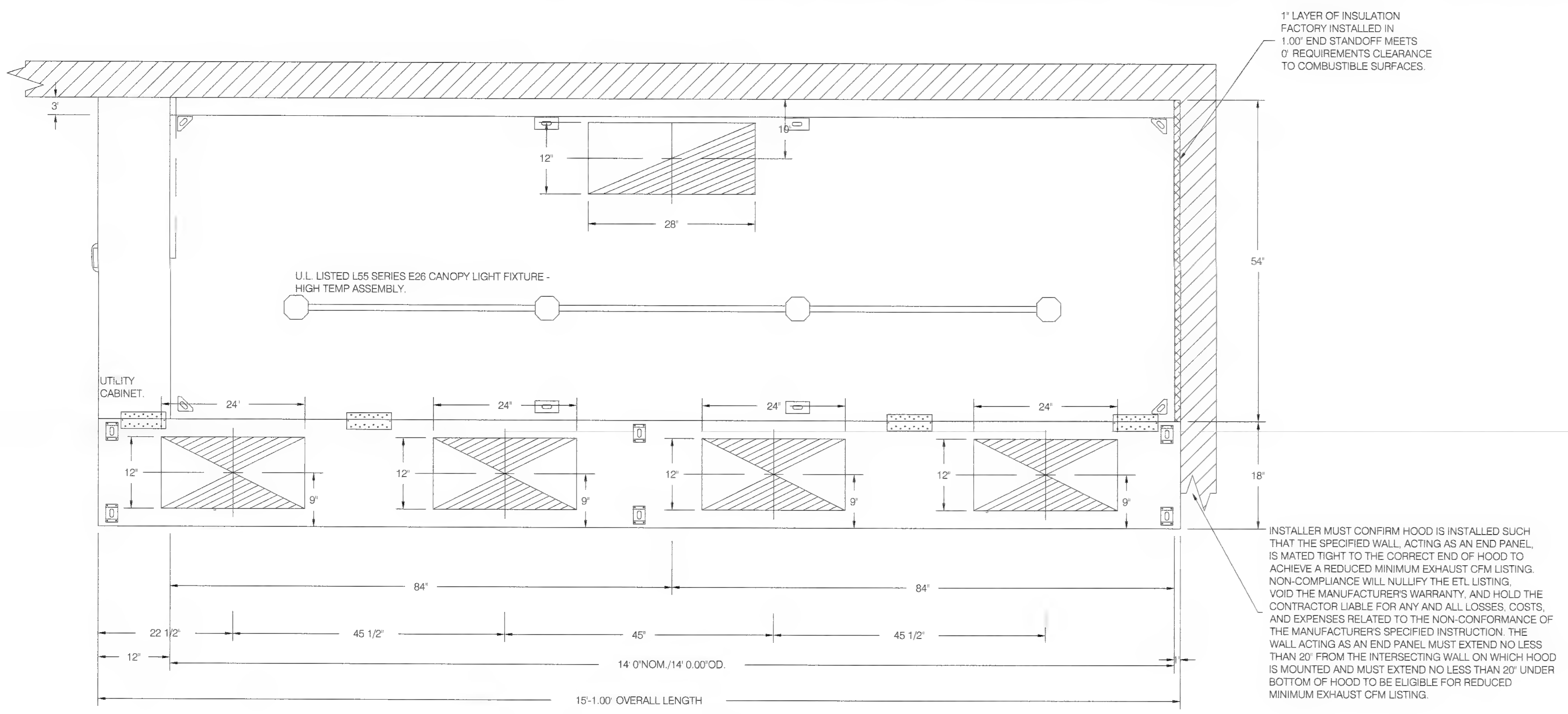

PLAN VIEW - HOOD #24 (K24)
14' 0.00" LONG 5424EX-2-PSP-F
NOTE: ADDITIONAL HANGING ANGLES PROVIDED FOR HOODS 12' AND LONGER

GENERAL NOTES:

ALL TYPE-I GREASE DUCT SHALL BE TESTED ON GROUND PRIOR TO INSTALL

Alameda County
Dept. of Environmental Health
Approved By: T. Tran

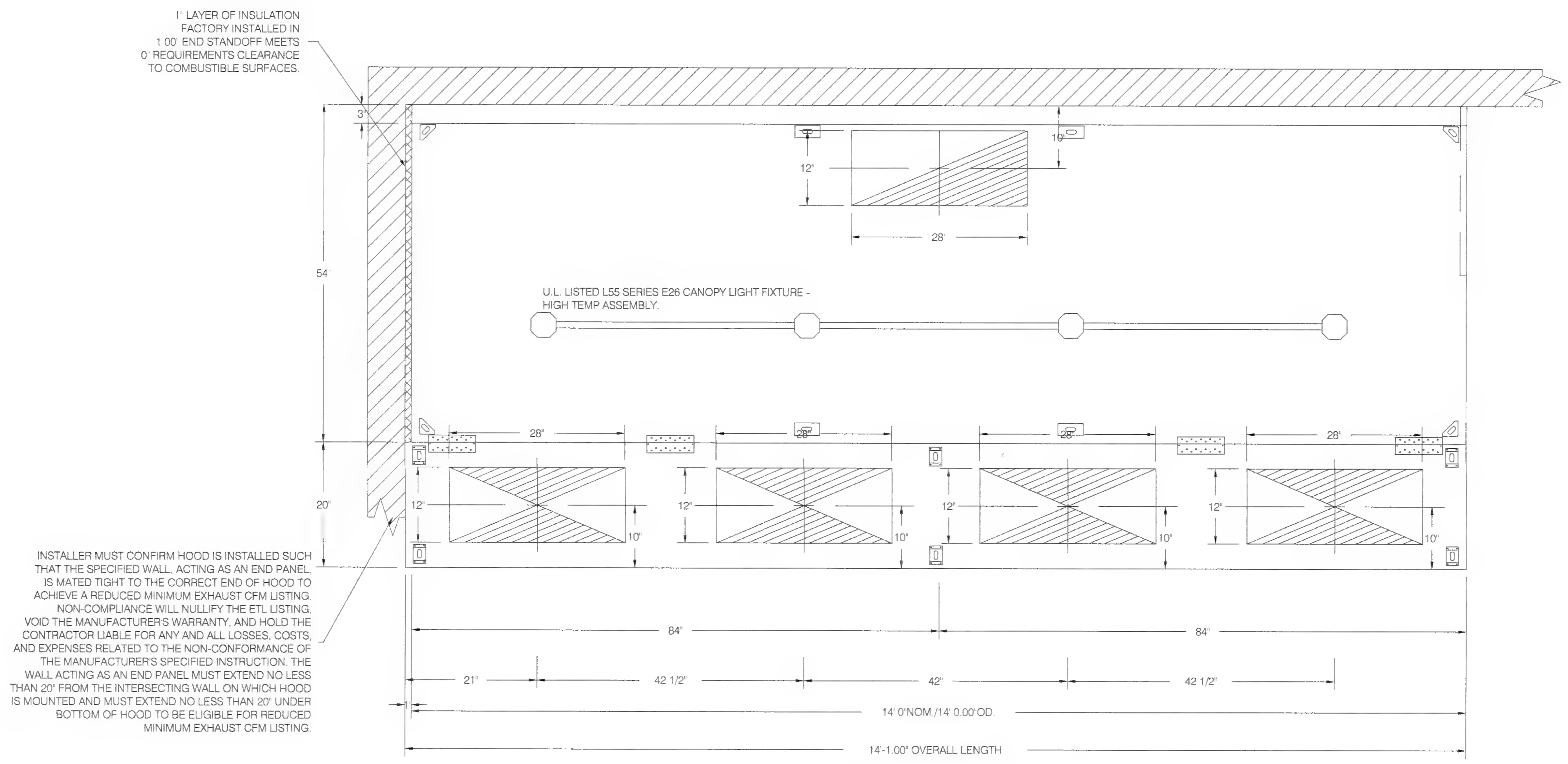

PLAN VIEW - HOOD #28 (K28)
14' 0.00" LONG 5424EX-2-PSP-F
NOTE: ADDITIONAL HANGING ANGLES PROVIDED FOR HOODS 12' AND LONGER

REVISIONS

DESCRIPTION	DATE
△	
△	
△	
△	

econ·air
www.econair.com
Central CA
8 Adrian Court, Burlingame, CA, 94010 PHONE: (415) 956-2200 FAX: (919) 227-5940 EMAIL: reg91@econair.com

Saltalk Central Kitchen - Fremont, CA
42516 Albrae St,
Fremont, CA, 94538

DATE: 3/9/2022

DWG.#: 5254633

DRAWN BY: T.Thai

SCALE: 3/4" = 1'-0"

MASTER DRAWING

SHEET NO. 5

CO AR

CO-AR DESIGN, INC.
680 Brea Canyon Rd., Ste. 178
Diamond Bar, CA 91789

Office: 909-598-0186
http:\\www.coardesign.com

Dennis J. Lee, Architect
dennisl@coardesign.com

THESE DRAWINGS ARE THE PROPERTY OF THE ARCHITECT. THE DESIGNS SHOWN AND DESCRIBED HERIN INCLUDING ALL TECHNICAL DRAWINGS ARE PROPRIETARY AND CANNOT BE COPIED, DUPLICATED OR COMMERCIALLY EXPLOITED, IN WHOLE OR IN PART. THE DRAWINGS AND SPECIFICATIONS SHALL NOT BE USED BY THE OWNER ON OTHER PROJECTS, FOR ADDITIONS TO THIS PROJECT, OR FOR COMPLETION OF THIS PROJECT BY OTHERS. THE OWNER AGREES TO HOLD HARMLESS, INDEMNIFY AND DEFEND THE ARCHITECT AGAINST ALL DAMAGES, CLAIMS AND LOSSES, INCLUDING DEFENSE COSTS, ARISING OUT OF ANY REUSE OF THE PLANS AND SPECIFICATIONS WITHOUT THE WRITTEN AUTHORIZATION OF THE ARCHITECT OF RECORD.

COPYRIGHT © 2022 CO-AR DESIGN, INC., ALL RIGHTS RESERVED.

SEAL:

REGISTERED PROFESSIONAL ENGINEER JIA HUI PAN M35374 EXP. 6/30/23 MECHANICAL STATE OF CALIFORNIA

NOTES:

JHP Engineering and Design Services Inc.
3103 Independence Drive
Livermore, CA 94551
TEL: 925-409-2508
CEL: 510-468-0613
FAX: 510-788-6039

PROJECT

SALTALK FREMONT KITCHEN TENANT IMPROVEMENT

42550 ALBRAE ST.,
FREMONT, CA 94538

CLIENT

SALTALK, INC.
3334 VICTOR CT.,
SANTA CLARA, CA 95054

SUBMITTALS/ REVISIONS

1	HEALTH/USD SUBMITTAL	04/01/2022
2	2ND BLD. SUBMITTAL △1	07/22/2022
3	3RD BLD. SUBMITTAL	08/30/2022
4	3RD USD. SUBMITTAL	09/01/2022
5	2ND HEALTH SUBMITTAL	09/29/2022

PROJECT NO.	21127
SCALE	AS SHOWN
DATE	2/10/2022
DRAWN BY	TL / YC
CHECKED BY	JP

SHEET TITLE

KITCHEN HOOD DRAWINGS

SHEET NO

M-3.4

GENERAL NOTES:

ALL TYPE-I GREASE DUCT SHALL BE TESTED ON GROUND PRIOR TO INSTALL

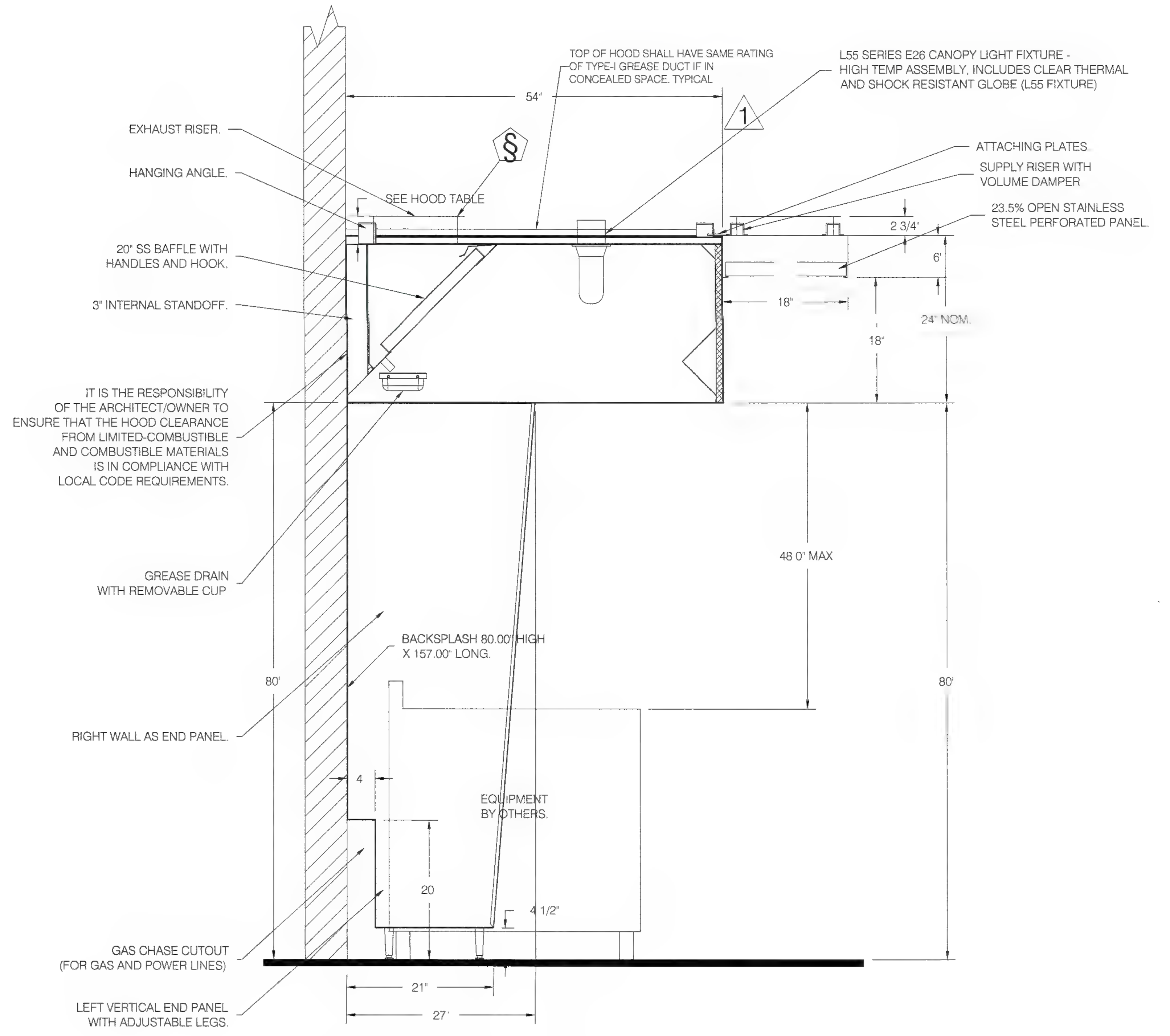

SECTION VIEW – MODEL 5424EX-2-PSP-F

HOOD – #1 (K1), #3 (K3), #5 (K5), #7 (K7), #9 (K9), #11 (K11), #13 (K13), #15 (K15), #17 (K17), #19 (K19), #22 (K22), #25 (K25), #27 (K27)

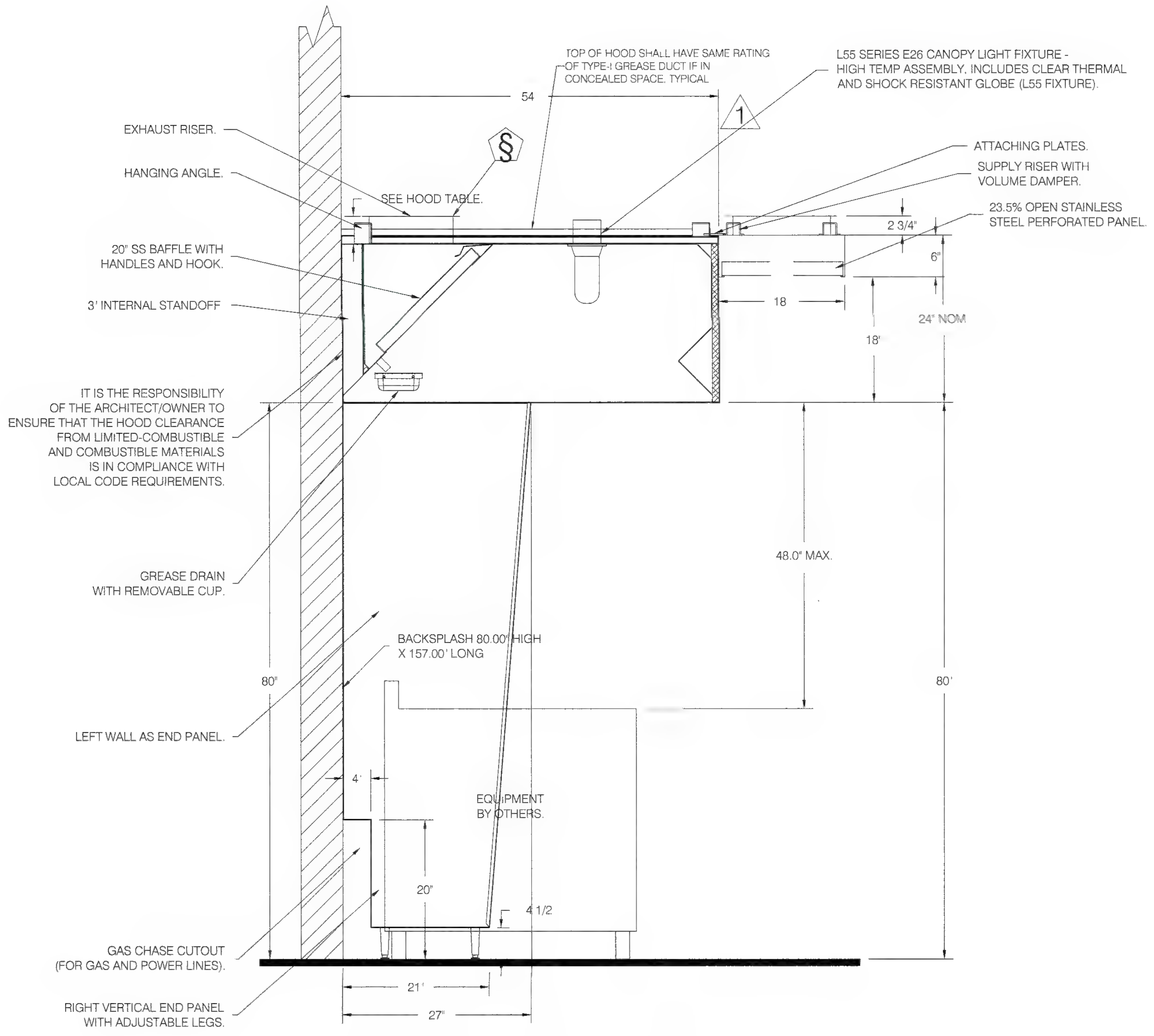

SECTION VIEW – MODEL 5424EX-2-PSP-F

HOOD – #2 (K2), #4 (K4), #6 (K6), #8 (K8), #10 (K10), #12 (K12), #14 (K14), #16 (K16), #18 (K18), #20 (K20), #21 (K21), #23 (K23), #26 (K26)

Alameda County
Dept. of Environmental Health
Approved By: T. Tran

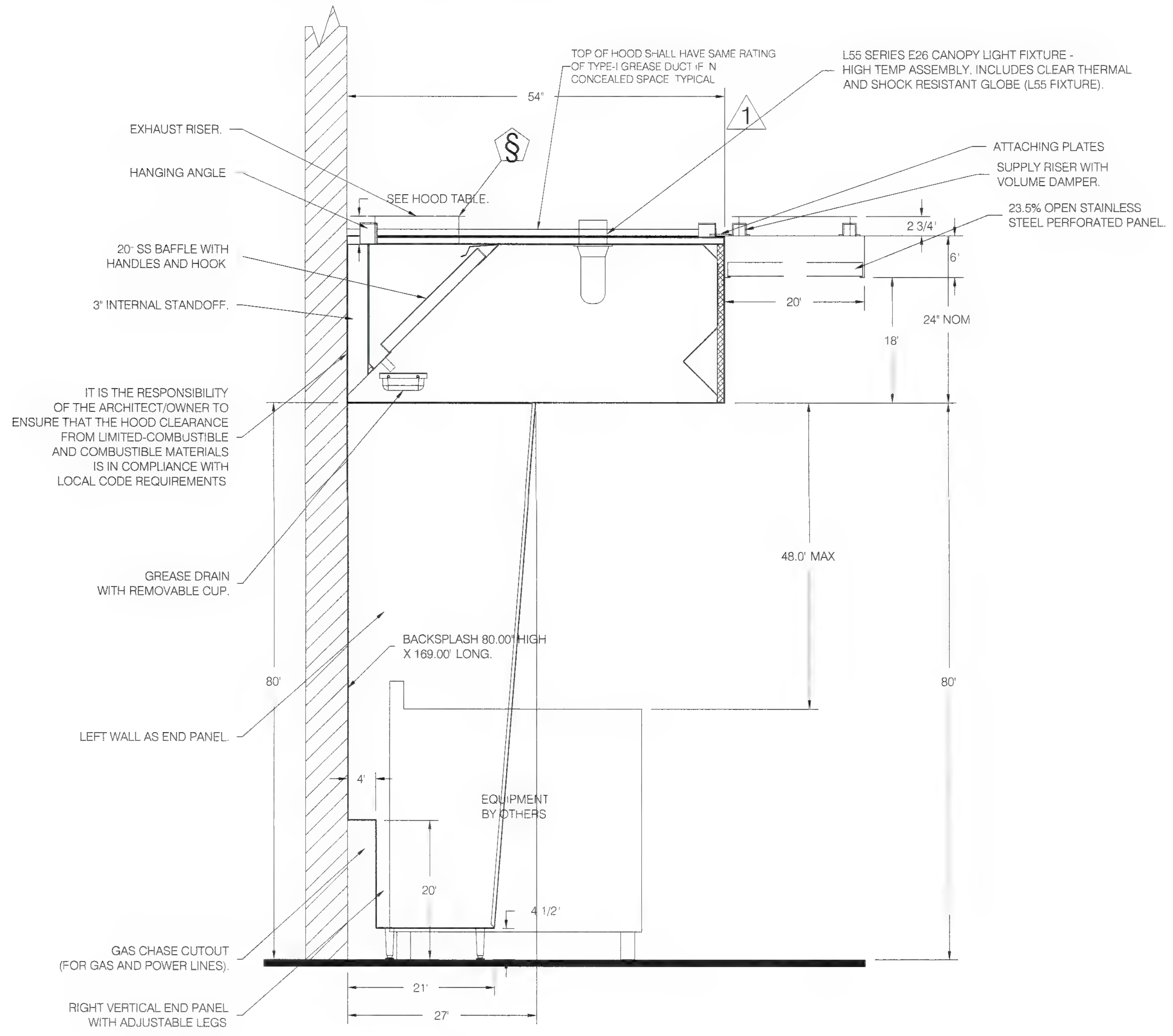

SECTION VIEW – MODEL 5424EX-2-PSP-F
HOOD – #28 (K28)

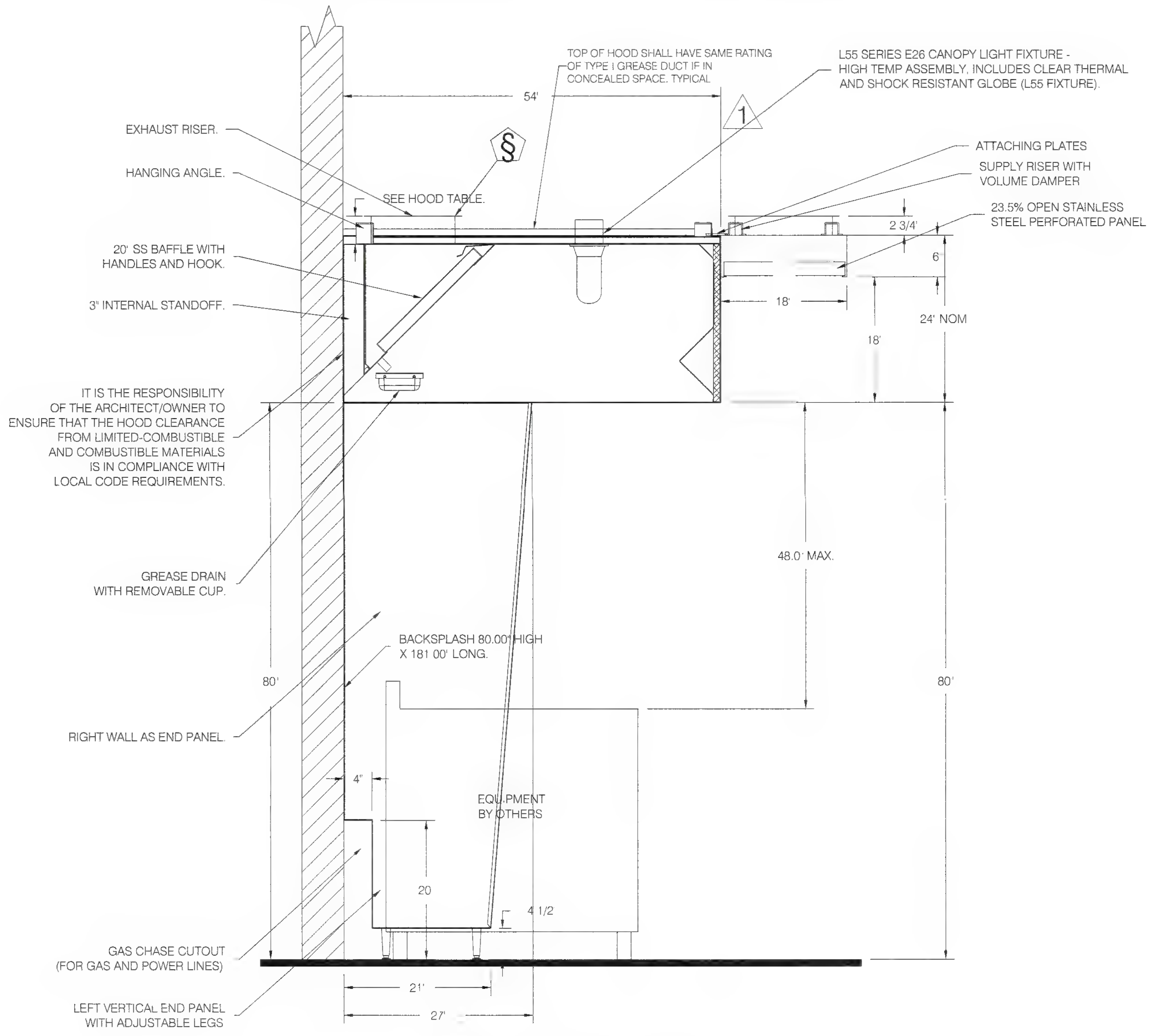

SECTION VIEW – MODEL 5424EX-2-PSP-F
HOOD – #24 (K24)

REVISIONS	
DESCRIPTION	DATE:
△	
△	
△	
△	

econ·air
Central CA
www.econair.com
8 Adrian Court, Burlingame, CA, 94010 PHONE: (415) 956-2200 FAX: (919) 227-5940 EMAIL: reg91@econair.com

Saltalk Central Kitchen - Fremont, CA
42516 Albrae St,
Fremont, CA, 94538

DATE: 3/9/2022

DWG.#: 5254633

DRAWN BY: T.Thai

SCALE: 3/4" = 1'–0"

MASTER DRAWING

SHEET NO. 6

CO-AR DESIGN, INC.
680 Brea Canyon Rd., Ste. 178
Diamond Bar, CA 91789

Office: 909-598-0186
http:\\www.coardesign.com

Dennis J. Lee, Architect
dennisl@coardesign.com

THESE DRAWINGS ARE THE PROPERTY OF THE ARCHITECT. THE DESIGNS SHOWN AND DESCRIBED HERIN INCLUDING ALL TECHNICAL DRAWINGS ARE PROPRIETARY AND CANNOT BE COPIED, DUPLICATED OR COMMERCIALLY EXPLOITED, IN WHOLE OR IN PART. THE DRAWINGS AND SPECIFICATIONS SHALL NOT BE USED BY THE OWNER ON OTHER PROJECTS, FOR ADDITIONS TO THIS PROJECT, OR FOR COMPLETION OF THIS PROJECT BY OTHERS. THE OWNER AGREES TO HOLD HARMLESS, INDEMNIFY AND DEFEND THE ARCHITECT AGAINST ALL DAMAGES, CLAIMS AND LOSSES, INCLUDING DEFENSE COSTS, ARISING OUT OF ANY REUSE OF THE PLANS AND SPECIFICATIONS WITHOUT THE WRITTEN AUTHORIZATION OF THE ARCHITECT OF RECORD.

COPYRIGHT © 2022 CO-AR DESIGN, INC., ALL RIGHTS RESERVED.

SEAL

REGISTERED PROFESSIONAL ENGINEER
JIA HUI PAN
M35374
EXP. 6/30/23
MECHANICAL
STATE OF CALIFORNIA

NOTES:

JHP Engineering and Design Services Inc.
3103 Independence Drive
Livermore, CA 94551
TEL: 925-409-2508
CEL: 510 468-0613
FAX: 510-788-6039

PROJECT
SALTALK FREMONT KITCHEN TENANT IMPROVEMENT

42550 ALBRAE ST.,
FREMONT, CA 94538

CLIENT

SALTALK, INC.
3334 VICTOR CT.,
SANTA CLARA, CA 95054

SUBMITTALS/ REVISIONS

1	HEALTH/USD SUBMITTAL	04/01/2022
2	2ND BLD. SUBMITTAL △1	07/22/2022
3	3RD BLD. SUBMITTAL	08/30/2022
4	3RD USD SUBMITTAL	09/01/2022
5	2ND HEALTH SUBMITTAL	09/29/2022

PROJECT NO	21127
SCALE	AS SHOWN
DATE	2/10/2022
DRAWN BY	TL / YC
CHECKED BY	JP

SHEET TITLE
KITCHEN HOOD DRAWINGS

SHEET NO
M-3.5

SECTION 23 38 13 13

SPECIFICATIONS

TAG: Commercial Kitchen Ventilation Hoods, Listed Commercial Kitchen Hoods

PART 1 - GENERAL

1.1 SUMMARY

A. The ND2 series is a Type I, wall canopy hood for use over 600°F cooking surface temperatures. The aerodynamic design includes a mechanical baffle and performance enhancing lip for exceptional capture and containment.

B. The hood shall have the size, shape, and performance specified on drawings.

1.2 SUBMITTALS

A. The manufacturer assumes no liability for the use or results of use from this document. Specifications are to be reviewed by the engineer to confirm the project's requirements and meet Federal, State, and Local codes and regulations.

B. As the manufacturer continues product development, it reserves the right to change design and specifications without notice.

C. The manufacturer shall supply complete computer generated submittal drawings, including hood section view(s) and hood plan view(s). These drawings must be available to the engineer, architect, and owner for their use in construction, operation, and maintenance.

1.3 QUALITY ASSURANCE

A. This hood is ETL-listed to standard UL710, ULC710, and ULC-S646 when installed in accordance with these installation instructions and National Fire Protection Association Standard "NFPA 96, Standard for Ventilation Control and Fire Protection of Commercial Cooking Operations."

B. Built-in compliance with NSF/ANSI Standard 2.

C. The hood shall be ETL Listed as:

1. "Exhaust Hood Without Exhaust Damper."

2. ETL Sanitation Listed and built in accordance with NFPA 96.

3. The ETL label shall list temperature rating(s) and minimum CFM/ft rating(s).

1.4 WARRANTY

A. All units shall be provided with the following standard warranty:

1. This equipment is warranted to be free from defects in materials and workmanship, under normal use and service, for a period of 2-years from date of shipment.

B. The manufacturer shall not be liable for incidental and consequential losses and damages potentially attributable to malfunctioning equipment. Should any part of the equipment prove to be defective in material or workmanship within the 2-year warranty period, upon examination by the manufacturer, such part will be repaired or replaced by manufacturer at no charge. The buyer shall pay all labor costs incurred in connection with such repair or replacement. Equipment shall not be returned without manufacturer's prior authorization, and all returned equipment shall be shipped by the buyer, freight prepaid to a destination determined by the manufacturer.

C. Refer to Manufacturer's Operation, Installation, and Maintenance (OIM) Manual for detailed descriptions of what is/is not covered and contact information for warranty claims.

PART 2 - PRODUCTS

2.1 GENERAL

A. Construction shall be dependent on the structural application to minimize distortion and other defects. All seams, joints, and penetrations of the hood enclosure to the lower outermost perimeter, which directs and captures grease-laden vapor and exhaust gases, shall have a liquid-tight continuous external weld in accordance with NFPA 96.

B. Duct sizes, CFM, and static pressure requirements shall be as shown on drawings. Static pressure requirements shall be precise and accurate; air velocity and volume information shall be accurate within 1-ft increments along the length of the ventilator.

2.2 CONSTRUCTION

A. Construction shall be type 430 stainless steel.

B. Double wall insulated front to eliminate condensation and increase rigidity on wide sizes. The insulation shall have a flexural modulus of 475 EI, meet UL 181 requirements and be in accordance with NFPA 90A and 90B.

C. Hood shall be equipped with a minimum of four connections for hanger rods. Hood lengths greater than 12' will have added hangers.

D. Exhaust duct collar to be 4" high with flange.

E. The grease drain system shall be an enclosed integral part of the hood back and have slopes with an exposed, removable 1/2 grease cup to facilitate cleaning.

F. An integral baffle to direct grease laden vapors toward the exhaust filter bank.

G. Hood shall be furnished with UL classified filters, supplied in size and quantity as required by ventilator.

H. All seams shall be welded and have stainless steel on exposed surfaces.

2.3 LIGHTING

A. L55 Series canopy light fixture, includes clear thermal and shock resistant globe.

2.4 FILTERS

A. Kleen-Gard Stainless Steel Baffle Filter with Handles and Bottom Hanging Hook, UL Classified.

2.5 OPTIONS

A. Optional perforated supply plenum shall provide make-up air discharged below the cooking equipment.

1. Perforated diffuser plates shall be included in the design to provide even air distribution.

2. Unexposed surfaces shall be constructed of aluminized steel. Plenum shall be insulated to prevent condensation.

3. Perforated Supply Plenum (PSP)

B. Hood Mounted Utility Cabinet - Cabinet can store listed fire suppression system, listed components, pre-wired electrical controls.

2.6 ACCESSORIES

A. End Panel(s) maximize hood performance and eliminate the effects of cross drafts in the kitchen. Units constructed of stainless steel and sized according to hood width and cooking equipment. Exposed edges hemmed for safety and rigidity. Selected panels:

1. Vertical End Panel

2. Wall as End Panel

B. Splash panel(s) selected:

1. Backsplash

2. Left Sidesplash

3. Right Sidesplash

C. Standoff(s) selected:

1. Left End Standoff

2. Right End Standoff

PART 3 - EXECUTION

3.1 EXAMINATION

A. Examine areas and conditions under which the system is installed. Do not proceed with work until unsatisfactory conditions have been corrected in a manner acceptable to Installer.

3.2 INSTALLATION

A. Install in accordance with manufacturer's instructions, drawings, written specifications, manufacturer's installation manual, and all applicable building codes.

Alameda County
Dept. of Environmental Health
Approved By: T. Tran

REVISIONS	
DESCRIPTION	DATE
△	
△	
△	
△	

econ·air
Central CA
www.econair.com
8 Adrian Court, Burlingame, CA, 94010 PHONE: (415) 956-2200 FAX: (919) 227-5940 EMAIL: reg91@econair.com

Saltalk Central Kitchen - Fremont, CA
42516 Albrae St,
Fremont, CA, 94538

DATE: 3/9/2022

DWG.#: 5254633

DRAWN BY: T.Thai

SCALE: 3/4" = 1'-0"

MASTER DRAWING

SHEET NO. 7

CO-AR DESIGN, INC.
680 Brea Canyon Rd., Ste. 178
Diamond Bar, CA 91789

Office: 909-598-0186
http:\\www.coardesign.com

Dennis J. Lee, Architect
dennisl@coardesign.com

THESE DRAWINGS ARE THE PROPERTY OF THE ARCHITECT. THE DESIGNS SHOWN AND DESCRIBED HERIN INCLUDING ALL TECHNICAL DRAWINGS ARE PROPRIETARY AND CANNOT BE COPIED, DUPLICATED OR COMMERCIALLY EXPLOITED, IN WHOLE OR IN PART. THE DRAWINGS AND SPECIFICATIONS SHALL NOT BE USED BY THE OWNER ON OTHER PROJECTS, FOR ADDITIONS TO THIS PROJECT, OR FOR COMPLETION OF THIS PROJECT BY OTHERS THE OWNER AGREES TO HOLD HARMLESS, INDEMNIFY AND DEFEND THE ARCHITECT AGAINST ALL DAMAGES, CLAIMS AND LOSSES, INCLUDING DEFENSE COSTS, ARISING OUT OF ANY REUSE OF THE PLANS AND SPECIFICATIONS WITHOUT THE WRITTEN AUTHORIZATION OF THE ARCHITECT OF RECORD.

COPYRIGHT © 2022 CO-AR DESIGN, INC., ALL RIGHTS RESERVED.

SEAL

REGISTERED PROFESSIONAL ENGINEER
JIA HUI PAN
M35374
EXP. 6/30/23
MECHANICAL
STATE OF CALIFORNIA

NOTES

JHP Engineering and Design Services Inc.
3103 Independence Drive
Livermore, CA 94551
TEL: 925-409-2508
CEL: 510-468-0613
FAX: 510-788-6039

PROJECT

SALTALK FREMONT KITCHEN TENANT IMPROVEMENT

42550 ALBRAE ST.,
FREMONT, CA 94538

CLIENT

SALTALK, INC.
3334 VICTOR CT.,
SANTA CLARA, CA 95054

SUBMITTALS/ REVISIONS

1	HEALTH/USD SUBMITTAL	04/01/2022
2	2ND BLD SUBMITTAL	07/22/2022
3	3RD BLD. SUBMITTAL	08/30/2022
4	3RD USD. SUBMITTAL	09/01/2022
5	2ND HEALTH SUBMITTAL	09/29/2022

PROJECT NO	21127
SCALE	AS SHOWN
DATE	2/10/2022
DRAWN BY	TL / YC
CHECKED BY	JP

SHEET TITLE

KITCHEN HOOD SPECIFICATION

SHEET NO

M-3.6

EXHAUST FAN INFORMATION – JOB#5254633

FAN UNIT NO	TAG	QTY	FAN UNIT MODEL #	MANUFACTURER	CFM	ESP	RPM	MOTOR ENCL	HP	BHP	PHASE	VOLT	FLA	DISCHARGE VELOCITY	WEIGHT (LBS)	SONES
1	KEF-K1	1	USBI18DD-RM	CAPTIVEAIRE	3000	2.000	1411	ODP,PREMIUM	3.000	1.6240	3	208	9.5	1538 FPM	423	21
2	KEF-K2	1	USBI18DD-RM	CAPTIVEAIRE	3000	2.000	1411	ODP,PREMIUM	3.000	1.6240	3	208	9.5	1538 FPM	423	21
3	KEF-K3	1	DU180HFA	CAPTIVEAIRE	3000	1.500	1305	ODP,PREMIUM	3.000	1.5910	3	208	9.5	693 FPM	188	18.9
4	KEF-K4	1	USBI18DD-RM	CAPTIVEAIRE	3000	2.000	1411	ODP,PREMIUM	3.000	1.6240	3	208	9.5	1538 FPM	423	21
5	KEF-K5	1	USBI18DD-RM	CAPTIVEAIRE	3000	2.000	1411	ODP,PREMIUM	3.000	1.6240	3	208	9.5	1538 FPM	423	21
6	KEF-K6	1	USBI18DD-RM	CAPTIVEAIRE	3000	2.000	1411	ODP,PREMIUM	3.000	1.6240	3	208	9.5	1538 FPM	423	21
7	KEF-K7	1	USBI18DD-RM	CAPTIVEAIRE	3000	2.000	1411	ODP,PREMIUM	3.000	1.6240	3	208	9.5	1538 FPM	423	21
8	KEF-K8	1	USBI18DD-RM	CAPTIVEAIRE	3000	2.000	1411	ODP,PREMIUM	3.000	1.6240	3	208	9.5	1538 FPM	423	21
9	KEF-K9	1	USBI18DD-RM	CAPTIVEAIRE	3000	2.000	1411	ODP,PREMIUM	3.000	1.6240	3	208	9.5	1538 FPM	423	21
10	KEF-K10	1	DU180HFA	CAPTIVEAIRE	3000	1.500	1305	ODP,PREMIUM	3.000	1.5910	3	208	9.5	693 FPM	188	18.9
11	KEF-K11	1	DU180HFA	CAPTIVEAIRE	3000	1.500	1305	ODP,PREMIUM	3.000	1.5910	3	208	9.5	693 FPM	188	18.9
12	KEF-K12	1	DU180HFA	CAPTIVEAIRE	3000	1.500	1305	ODP,PREMIUM	3.000	1.5910	3	208	9.5	693 FPM	188	18.9
13	KEF-K13	1	DU180HFA	CAPTIVEAIRE	3000	1.500	1305	ODP,PREMIUM	3.000	1.5910	3	208	9.5	693 FPM	188	18.9
14	KEF-K14	1	DU180HFA	CAPTIVEAIRE	3000	1.500	1305	ODP,PREMIUM	3.000	1.5910	3	208	9.5	693 FPM	188	18.9
15	KEF-K15	1	DU180HFA	CAPTIVEAIRE	3000	1.500	1305	ODP,PREMIUM	3.000	1.5910	3	208	9.5	693 FPM	188	18.9
16	KEF-K16	1	DU180HFA	CAPTIVEAIRE	3000	1.500	1305	ODP,PREMIUM	3.000	1.5910	3	208	9.5	693 FPM	188	18.9
17	KEF-K17	1	DU180HFA	CAPTIVEAIRE	3000	1.500	1305	ODP,PREMIUM	3.000	1.5910	3	208	9.5	693 FPM	188	18.9
18	KEF-K18	1	DU180HFA	CAPTIVEAIRE	3000	1.500	1305	ODP,PREMIUM	3.000	1.5910	3	208	9.5	693 FPM	188	18.9
19	KEF-K19	1	DU180HFA	CAPTIVEAIRE	3000	1.500	1305	ODP,PREMIUM	3.000	1.5910	3	208	9.5	693 FPM	188	18.9
20	KEF-K20	1	DU180HFA	CAPTIVEAIRE	3000	1.500	1305	ODP,PREMIUM	3.000	1.5910	3	208	9.5	693 FPM	188	18.9
21	KEF-K21	1	DU180HFA	CAPTIVEAIRE	3000	1.500	1305	ODP,PREMIUM	3.000	1.5910	3	208	9.5	693 FPM	188	18.9
22	KEF-K22	1	DU180HFA	CAPTIVEAIRE	3000	1.500	1305	ODP,PREMIUM	3.000	1.5910	3	208	9.5	693 FPM	188	18.9
23	KEF-K23	1	DU180HFA	CAPTIVEAIRE	3000	1.500	1305	ODP,PREMIUM	3.000	1.5910	3	208	9.5	693 FPM	188	18.9
24	KEF-K24	1	DU240HFA	CAPTIVEAIRE	3500	1.500	863	ODP,PREMIUM	3.000	1.7880	3	208	10.2	795 FPM	309	16.3
25	KEF-K25	1	USBI18DD-RM	CAPTIVEAIRE	3000	2.000	1411	ODP,PREMIUM	3.000	1.6240	3	208	9.5	1538 FPM	423	21
26	KEF-K26	1	USBI18DD-RM	CAPTIVEAIRE	3000	2.000	1411	ODP,PREMIUM	3.000	1.6240	3	208	9.5	1538 FPM	423	21
27	KEF-K27	1	USBI18DD-RM	CAPTIVEAIRE	3000	2.000	1411	ODP,PREMIUM	3.000	1.6240	3	208	9.5	1538 FPM	423	21
28	KEF-K28	1	USBI18DD-RM	CAPTIVEAIRE	3500	2.000	1499	ODP,PREMIUM	3.000	1.9800	3	208	9.5	1794 FPM	423	23

Alameda County
Dept. of Environmental Health
Approved By: T. Tran

REVISIONS

DESCRIPTION	DATE
△	
△	
△	
△	

CAPTIVEAIRE
Central CA
8 Adrian Court, Burlingame, CA, 94010 PHONE: (415) 956-2200 FAX: (919) 227-5940 EMAIL: reg91@econair.com
www.captiveaire.com

Saltalk Central Kitchen - Fremont, CA
42516 Albrae St,
Fremont, CA, 94538

DATE: 3/9/2022

DWG.#: 5254633

DRAWN BY: T.Thai

SCALE: 3/4" = 1'-0"

MASTER DRAWING

SHEET NO. 8

CO-AR DESIGN, INC.
680 Brea Canyon Rd., Ste. 178
Diamond Bar, CA 91789

Office: 909-598-0186
http:\\www.coardesign.com

Dennis J. Lee, Architect
dennisl@coardesign.com

THESE DRAWINGS ARE THE PROPERTY OF THE ARCHITECT. THE DESIGNS SHOWN AND DESCRIBED HERIN INCLUDING ALL TECHNICAL DRAWINGS ARE PROPRIETARY AND CANNOT BE COPIED, DUPLICATED OR COMMERCIALLY EXPLOITED, IN WHOLE OR IN PART. THE DRAWINGS AND SPECIFICATIONS SHALL NOT BE USED BY THE OWNER ON OTHER PROJECTS, FOR ADDITIONS TO THIS PROJECT, OR FOR COMPLETION OF THIS PROJECT BY OTHERS. THE OWNER AGREES TO HOLD HARMLESS, INDEMNIFY AND DEFEND THE ARCHITECT AGAINST ALL DAMAGES, CLAIMS AND LOSSES, INCLUDING DEFENSE COSTS, ARISING OUT OF ANY REUSE OF THE PLANS AND SPECIFICATIONS WITHOUT THE WRITTEN AUTHORIZATION OF THE ARCHITECT OF RECORD

COPYRIGHT © 2022 CO-AR DESIGN, INC., ALL RIGHTS RESERVED.

SEAL

REGISTERED PROFESSIONAL ENGINEER
JIA HUI PAN
M35374
EXP. 6/30/23
MECHANICAL
STATE OF CALIFORNIA

NOTES

JHP Engineering and Design Services Inc.
3103 Independence Drive
Livermore, CA 94551
TEL: 925-409-2508
CEL: 510-468-0613
FAX: 510-788-6039

PROJECT
SALTALK FREMONT KITCHEN TENANT IMPROVEMENT

42550 ALBRAE ST.,
FREMONT, CA 94538

CLIENT

SALTALK, INC.
3334 VICTOR CT.,
SANTA CLARA, CA 95054

SUBMITTALS/ REVISIONS

1	HEALTH/USD SUBMITTAL	04/01/2022
2	2ND BLD. SUBMITTAL	07/22/2022
3	3RD BLD. SUBMITTAL	08/30/2022
4	3RD USD. SUBMITTAL	09/01/2022
5	2ND HEALTH SUBMITTAL	09/29/2022

PROJECT NO:	21127
SCALE:	AS SHOWN
DATE:	2/10/2022
DRAWN BY:	TL / YC
CHECKED BY:	JP

SHEET TITLE
KEF SCHEDULES

SHEET NO
M-3.7

BIMcloud: COAR-CONFERENCE - BIMcloud Basic for ARCHICAD 25/202201 Fremont Ghost Kitchen Thursday, February 10, 2022 1:47 PM

MUA FAN INFORMATION – JOB#5254633

FAN UNIT NO	TAG	QTY	FAN UNIT MODEL #	BLOWER	HOUSING	MIN CFM	DESIGN CFM	ESP	RPM	MOTOR ENCL	HP	BHP	PHASE	VOLT	FLA	MCA	MOCP	EVAP FLOW RATE (Gal/Hr)	EVAP COOLER ENTERING DB TEMP	EVAP COOLER ENTERING WB TEMP	EVAP COOLER LEAVING DB TEMP	EVAP COOLER LEAVING WB TEMP	WEIGHT (LBS)	SONES
29	MAU-K1	1	A2-20D	20MF-2-MOD	A2	1500	3000	1.000	1363	ODP,PREMIUM	2.000	1.3430	3	208	8.3	10.4A	15A	4.22	90.0°F	65.0°F	71.0°F	65.0°F	594	16.2
30	MAU-K2	1	A2-20D	20MF-2-MOD	A2	1500	3000	1.000	1363	ODP,PREMIUM	2.000	1.3430	3	208	8.3	10.4A	15A	4.22	90.0°F	65.0°F	71.0°F	65.0°F	594	16.2
31	MAU-K3	1	A2-20D	20MF-2-MOD	A2	1500	3000	0.500	1192	ODP,PREMIUM	2.000	0.9330	3	208	8.3	10.4A	15A	4.22	90.0°F	65.0°F	71.0°F	65.0°F	594	13.4
32	MAU-K4	1	A2-20D	20MF-2-MOD	A2	1500	3000	1.000	1363	ODP,PREMIUM	2.000	1.3430	3	208	8.3	10.4A	15A	4.22	90.0°F	65.0°F	71.0°F	65.0°F	594	16.2
33	MAU-K5	1	A2-20D	20MF-2-MOD	A2	1500	3000	1.000	1363	ODP,PREMIUM	2.000	1.3430	3	208	8.3	10.4A	15A	4.22	90.0°F	65.0°F	71.0°F	65.0°F	594	16.2
34	MAU-K6	1	A2-20D	20MF-2-MOD	A2	1500	3000	1.000	1363	ODP,PREMIUM	2.000	1.3430	3	208	8.3	10.4A	15A	4.22	90.0°F	65.0°F	71.0°F	65.0°F	594	16.2
35	MAU-K7	1	A2-20D	20MF-2-MOD	A2	1500	3000	1.000	1363	ODP,PREMIUM	2.000	1.3430	3	208	8.3	10.4A	15A	4.22	90.0°F	65.0°F	71.0°F	65.0°F	594	16.2
36	MAU-K8	1	A2-20D	20MF-2-MOD	A2	1500	3000	1.000	1363	ODP,PREMIUM	2.000	1.3430	3	208	8.3	10.4A	15A	4.22	90.0°F	65.0°F	71.0°F	65.0°F	594	16.2
37	MAU-K9	1	A2-20D	20MF-2-MOD	A2	1500	3000	1.000	1363	ODP,PREMIUM	2.000	1.3430	3	208	8.3	10.4A	15A	4.22	90.0°F	65.0°F	71.0°F	65.0°F	594	16.2
38	MAU-K10	1	A2-20D	20MF-2-MOD	A2	1500	3000	0.500	1192	ODP,PREMIUM	2.000	0.9330	3	208	8.3	10.4A	15A	4.22	90.0°F	65.0°F	71.0°F	65.0°F	594	13.4
39	MAU-K11	1	A2-20D	20MF-2-MOD	A2	1500	3000	0.500	1192	ODP,PREMIUM	2.000	0.9330	3	208	8.3	10.4A	15A	4.22	90.0°F	65.0°F	71.0°F	65.0°F	594	13.4
40	MAU-K12	1	A2-20D	20MF-2-MOD	A2	1500	3000	0.500	1192	ODP,PREMIUM	2.000	0.9330	3	208	8.3	10.4A	15A	4.22	90.0°F	65.0°F	71.0°F	65.0°F	594	13.4
41	MAU-K13	1	A2-20D	20MF-2-MOD	A2	1500	3000	0.500	1192	ODP,PREMIUM	2.000	0.9330	3	208	8.3	10.4A	15A	4.22	90.0°F	65.0°F	71.0°F	65.0°F	594	13.4
42	MAU-K14	1	A2-20D	20MF-2-MOD	A2	1500	3000	0.500	1192	ODP,PREMIUM	2.000	0.9330	3	208	8.3	10.4A	15A	4.22	90.0°F	65.0°F	71.0°F	65.0°F	594	13.4
43	MAU-K15	1	A2-20D	20MF-2-MOD	A2	1500	3000	0.500	1192	ODP,PREMIUM	2.000	0.9330	3	208	8.3	10.4A	15A	4.22	90.0°F	65.0°F	71.0°F	65.0°F	594	13.4
44	MAU-K16	1	A2-20D	20MF-2-MOD	A2	1500	3000	0.500	1192	ODP,PREMIUM	2.000	0.9330	3	208	8.3	10.4A	15A	4.22	90.0°F	65.0°F	71.0°F	65.0°F	594	13.4
45	MAU-K17	1	A2-20D	20MF-2-MOD	A2	1500	3000	0.500	1192	ODP,PREMIUM	2.000	0.9330	3	208	8.3	10.4A	15A	4.22	90.0°F	65.0°F	71.0°F	65.0°F	594	13.4
46	MAU-K18	1	A2-20D	20MF-2-MOD	A2	1500	3000	0.500	1192	ODP,PREMIUM	2.000	0.9330	3	208	8.3	10.4A	15A	4.22	90.0°F	65.0°F	71.0°F	65.0°F	594	13.4
47	MAU-K19	1	A2-20D	20MF-2-MOD	A2	1500	3000	0.500	1192	ODP,PREMIUM	2.000	0.9330	3	208	8.3	10.4A	15A	4.22	90.0°F	65.0°F	71.0°F	65.0°F	594	13.4
48	MAU-K20	1	A2-20D	20MF-2-MOD	A2	1500	3000	0.500	1192	ODP,PREMIUM	2.000	0.9330	3	208	8.3	10.4A	15A	4.22	90.0°F	65.0°F	71.0°F	65.0°F	594	13.4
49	MAU-K21	1	A2-20D	20MF-2-MOD	A2	1500	3000	0.500	1192	ODP,PREMIUM	2.000	0.9330	3	208	8.3	10.4A	15A	4.22	90.0°F	65.0°F	71.0°F	65.0°F	594	13.4
50	MAU-K22	1	A2-20D	20MF-2-MOD	A2	1500	3000	0.500	1192	ODP,PREMIUM	2.000	0.9330	3	208	8.3	10.4A	15A	4.22	90.0°F	65.0°F	71.0°F	65.0°F	594	13.4
51	MAU-K23	1	A2-20D	20MF-2-MOD	A2	1500	3000	0.500	1192	ODP,PREMIUM	2.000	0.9330	3	208	8.3	10.4A	15A	4.22	90.0°F	65.0°F	71.0°F	65.0°F	594	13.4
52	MAU-K24	1	A2-20D	20MF-2-MOD	A2	1500	3500	0.500	1331	ODP,PREMIUM	3.000	1.3150	3	208	9.5	11.9A	20A	4.72	90.0°F	65.0°F	72.0°F	65.0°F	595	15.7
53	MAU-K25	1	A2-20D	20MF-2-MOD	A2	1500	3000	0.500	1192	ODP,PREMIUM	2.000	0.9330	3	208	8.3	10.4A	15A	4.22	90.0°F	65.0°F	71.0°F	65.0°F	594	13.4
54	MAU-K26	1	A2-20D	20MF-2-MOD	A2	1500	3000	0.500	1192	ODP,PREMIUM	2.000	0.9330	3	208	8.3	10.4A	15A	4.22	90.0°F	65.0°F	71.0°F	65.0°F	594	13.4
55	MAU-K27	1	A2-20D	20MF-2-MOD	A2	1500	3000	1.000	1363	ODP,PREMIUM	2.000	1.3430	3	208	8.3	10.4A	15A	4.22	90.0°F	65.0°F	71.0°F	65.0°F	594	16.2
56	MAU-K28	1	A2-20D	20MF-2-MOD	A2	1500	3500	1.000	1488	ODP,PREMIUM	3.000	1.7800	3	208	9.5	11.9A	20A	4.72	90.0°F	65.0°F	72.0°F	65.0°F	595	18.6

Alameda County
Dept. of Environmental Health
Approved By: T. Tran

REVISIONS

	DESCRIPTION	DATE:
△		
△		
△		
△		

CAPTIVEAIRE
www.captiveaire.com
Central CA
8 Adrian Court, Burlingame, CA, 94010 PHONE: (415) 956-2200 FAX: (919) 227-5940 EMAIL: reg91@econair.com

Saltalk Central Kitchen - Fremont, CA
42516 Albrae St,
Fremont, CA, 94538

DATE: 3/9/2022

DWG.#: 5254633

DRAWN BY: T.Thai

SCALE: 3/4" = 1'-0"

MASTER DRAWING

SHEET NO. 9

CO-AR DESIGN, INC.
680 Brea Canyon Rd., Ste. 178
Diamond Bar, CA 91789

Office: 909-598-0186
http:\\www.coardesign.com

Dennis J. Lee, Architect
dennisl@coardesign.com

THESE DRAWINGS ARE THE PROPERTY OF THE ARCHITECT. THE DESIGNS SHOWN AND DESCRIBED HERIN INCLUDING ALL TECHNICAL DRAWINGS ARE PROPRIETARY AND CANNOT BE COPIED, DUPLICATED OR COMMERCIALLY EXPLOITED, IN WHOLE OR IN PART. THE DRAWINGS AND SPECIFICATIONS SHALL NOT BE USED BY THE OWNER ON OTHER PROJECTS, FOR ADDITIONS TO THIS PROJECT, OR FOR COMPLETION OF THIS PROJECT BY OTHERS. THE OWNER AGREES TO HOLD HARMLESS, INDEMNIFY AND DEFEND THE ARCHITECT AGAINST ALL DAMAGES, CLAIMS AND LOSSES, INCLUDING DEFENSE COSTS, ARISING OUT OF ANY REUSE OF THE PLANS AND SPECIFICATIONS WITHOUT THE WRITTEN AUTHORIZATION OF THE ARCHITECT OF RECORD.

COPYRIGHT © 2022 CO-AR DESIGN, INC., ALL RIGHTS RESERVED.

SEAL:

REGISTERED PROFESSIONAL ENGINEER
JIA HUI PAN
M35374
EXP. 6/30/23
MECHANICAL
STATE OF CALIFORNIA

NOTES:

JHP Engineering and Design Services Inc.
3103 Independence Drive
Livermore, CA 94551
TEL: 925-409-2508
CEL: 510-468-0613
FAX: 510-788-6039

PROJECT

SALTALK FREMONT KITCHEN TENANT IMPROVEMENT

42550 ALBRAE ST.,
FREMONT, CA 94538

CLIENT:

SALTALK, INC.
3334 VICTOR CT.,
SANTA CLARA, CA 95054

SUBMITTALS/ REVISIONS

1	HEALTH/USD SUBMITTAL	04/01/2022
2	2ND BLD. SUBMITTAL	07/22/2022
3	3RD BLD. SUBMITTAL	08/30/2022
4	3RD USD. SUBMITTAL	09/01/2022
5	2ND HEALTH SUBMITTAL	09/29/2022

PROJECT NO:	21127
SCALE	AS SHOWN
DATE	2/10/2022
DRAWN BY	TL / YC
CHECKED BY	JP

SHEET TITLE

MAU SCHEDULES

SHEET NO

M-3.8

BIMcloud: COAR CONFERENCE - BIMcloud Basic for ARCHICAD 25/202201-Fremont Ghost Kitchen Thursday, February 10, 2022 1:47 PM

FAN OPTIONS 1

FAN UNIT NO	TAG	QTY	DESCRIPTION
1	KEF-K1	1	BI18 - INLET SERVICE DUCT CONNECTION. USED TO CONNECT TO STANDARD 20" GREASE DUCT OR FIELD WELDED DUCT. INCLUDES (2) 7" RISERS BOLTED TO STANDARD INLET RISER
		1	UTILITY SET GREASE CUP
		1	BI18 - 24" DISCHARGE EXTENSION
		1	BI - DISCHARGE ORIENTATION VERTICAL UPPER LEFT - CW INLET SIDE
		1	BI18 - INLET CONNECTION STANDARD 20" FLANGED GREASE DUCT
		1	UTILITY SET - SPRING VIBRATION ISOLATORS - BI18 / EQUIVALENT SIZED UTILITY SET - INDOOR/OUTDOOR USE
		1	2 YEAR PARTS WARRANTY
2	KEF-K2	1	BI18 - INLET SERVICE DUCT CONNECTION. USED TO CONNECT TO STANDARD 20" GREASE DUCT OR FIELD WELDED DUCT. INCLUDES (2) 7" RISERS BOLTED TO STANDARD INLET RISER
		1	UTILITY SET GREASE CUP
		1	BI18 - 24" DISCHARGE EXTENSION
		1	BI - DISCHARGE ORIENTATION VERTICAL UPPER LEFT - CW INLET SIDE
		1	BI18 - INLET CONNECTION STANDARD 20" FLANGED GREASE DUCT
		1	UTILITY SET - SPRING VIBRATION ISOLATORS - BI18 / EQUIVALENT SIZED UTILITY SET - INDOOR/OUTDOOR USE
		1	2 YEAR PARTS WARRANTY
3	KEF-K3	1	GREASE BOX
		1	FAN BASE CERAMIC SEAL - INSTALLED AT PLANT - FOR GREASE DUCTS
		1	2 YEAR PARTS WARRANTY
4	KEF-K4	1	BI18 - INLET SERVICE DUCT CONNECTION. USED TO CONNECT TO STANDARD 20" GREASE DUCT OR FIELD WELDED DUCT. INCLUDES (2) 7" RISERS BOLTED TO STANDARD INLET RISER
		1	UTILITY SET GREASE CUP
		1	BI18 - 24" DISCHARGE EXTENSION
		1	BI - DISCHARGE ORIENTATION VERTICAL UPPER LEFT - CW INLET SIDE
		1	BI18 - INLET CONNECTION STANDARD 20" FLANGED GREASE DUCT
		1	UTILITY SET - SPRING VIBRATION ISOLATORS - BI18 / EQUIVALENT SIZED UTILITY SET - INDOOR/OUTDOOR USE
		1	2 YEAR PARTS WARRANTY
5	KEF-K5	1	BI18 - INLET SERVICE DUCT CONNECTION. USED TO CONNECT TO STANDARD 20" GREASE DUCT OR FIELD WELDED DUCT. INCLUDES (2) 7" RISERS BOLTED TO STANDARD INLET RISER
		1	UTILITY SET GREASE CUP
		1	BI18 - 24" DISCHARGE EXTENSION
		1	BI - DISCHARGE ORIENTATION VERTICAL UPPER LEFT - CW INLET SIDE
		1	BI18 - INLET CONNECTION STANDARD 20" FLANGED GREASE DUCT
		1	UTILITY SET - SPRING VIBRATION ISOLATORS - BI18 / EQUIVALENT SIZED UTILITY SET - INDOOR/OUTDOOR USE
		1	2 YEAR PARTS WARRANTY
6	KEF-K6	1	BI18 - INLET SERVICE DUCT CONNECTION. USED TO CONNECT TO STANDARD 20" GREASE DUCT OR FIELD WELDED DUCT. INCLUDES (2) 7" RISERS BOLTED TO STANDARD INLET RISER
		1	UTILITY SET GREASE CUP
		1	BI18 - 24" DISCHARGE EXTENSION
		1	BI - DISCHARGE ORIENTATION VERTICAL UPPER LEFT - CW INLET SIDE
		1	BI18 - INLET CONNECTION STANDARD 20" FLANGED GREASE DUCT
		1	UTILITY SET - SPRING VIBRATION ISOLATORS - BI18 / EQUIVALENT SIZED UTILITY SET - INDOOR/OUTDOOR USE
		1	2 YEAR PARTS WARRANTY
7	KEF-K7	1	BI18 - INLET SERVICE DUCT CONNECTION. USED TO CONNECT TO STANDARD 20" GREASE DUCT OR FIELD WELDED DUCT. INCLUDES (2) 7" RISERS BOLTED TO STANDARD INLET RISER
		1	UTILITY SET GREASE CUP
		1	BI18 - 24" DISCHARGE EXTENSION
		1	BI - DISCHARGE ORIENTATION VERTICAL UPPER LEFT - CW INLET SIDE
		1	BI18 - INLET CONNECTION STANDARD 20" FLANGED GREASE DUCT
		1	UTILITY SET - SPRING VIBRATION ISOLATORS - BI18 / EQUIVALENT SIZED UTILITY SET - INDOOR/OUTDOOR USE
		1	2 YEAR PARTS WARRANTY
8	KEF-K8	1	BI18 - INLET SERVICE DUCT CONNECTION. USED TO CONNECT TO STANDARD 20" GREASE DUCT OR FIELD WELDED DUCT. INCLUDES (2) 7" RISERS BOLTED TO STANDARD INLET RISER
		1	UTILITY SET GREASE CUP
		1	BI18 - 24" DISCHARGE EXTENSION
		1	BI - DISCHARGE ORIENTATION VERTICAL UPPER LEFT - CW INLET SIDE
		1	BI18 - INLET CONNECTION STANDARD 20" FLANGED GREASE DUCT
		1	UTILITY SET - SPRING VIBRATION ISOLATORS - BI18 / EQUIVALENT SIZED UTILITY SET - INDOOR/OUTDOOR USE
		1	2 YEAR PARTS WARRANTY
9	KEF-K9	1	BI18 - INLET SERVICE DUCT CONNECTION. USED TO CONNECT TO STANDARD 20" GREASE DUCT OR FIELD WELDED DUCT. INCLUDES (2) 7" RISERS BOLTED TO STANDARD INLET RISER
		1	UTILITY SET GREASE CUP
		1	BI18 - 24" DISCHARGE EXTENSION
		1	BI - DISCHARGE ORIENTATION VERTICAL UPPER LEFT - CW INLET SIDE
		1	BI18 - INLET CONNECTION STANDARD 20" FLANGED GREASE DUCT
		1	UTILITY SET - SPRING VIBRATION ISOLATORS - BI18 / EQUIVALENT SIZED UTILITY SET - INDOOR/OUTDOOR USE
		1	2 YEAR PARTS WARRANTY
10	KEF-K10	1	GREASE BOX
		1	FAN BASE CERAMIC SEAL - INSTALLED AT PLANT - FOR GREASE DUCTS
		1	2 YEAR PARTS WARRANTY
11	KEF-K11	1	GREASE BOX
		1	FAN BASE CERAMIC SEAL - INSTALLED AT PLANT - FOR GREASE DUCTS
		1	2 YEAR PARTS WARRANTY
12	KEF-K12	1	GREASE BOX
		1	FAN BASE CERAMIC SEAL - INSTALLED AT PLANT - FOR GREASE DUCTS
		1	2 YEAR PARTS WARRANTY
13	KEF-K13	1	GREASE BOX
		1	FAN BASE CERAMIC SEAL - INSTALLED AT PLANT - FOR GREASE DUCTS
		1	2 YEAR PARTS WARRANTY
14	KEF-K14	1	GREASE BOX
		1	FAN BASE CERAMIC SEAL - INSTALLED AT PLANT - FOR GREASE DUCTS
		1	2 YEAR PARTS WARRANTY
15	KEF-K15	1	GREASE BOX
		1	FAN BASE CERAMIC SEAL - INSTALLED AT PLANT - FOR GREASE DUCTS
		1	2 YEAR PARTS WARRANTY
16	KEF-K16	1	GREASE BOX
		1	FAN BASE CERAMIC SEAL - INSTALLED AT PLANT - FOR GREASE DUCTS
		1	2 YEAR PARTS WARRANTY
17	KEF-K17	1	GREASE BOX
		1	FAN BASE CERAMIC SEAL - INSTALLED AT PLANT - FOR GREASE DUCTS
		1	2 YEAR PARTS WARRANTY
18	KEF-K18	1	GREASE BOX
		1	FAN BASE CERAMIC SEAL - INSTALLED AT PLANT - FOR GREASE DUCTS
		1	2 YEAR PARTS WARRANTY
19	KEF-K19	1	GREASE BOX
		1	FAN BASE CERAMIC SEAL - INSTALLED AT PLANT - FOR GREASE DUCTS
		1	2 YEAR PARTS WARRANTY
20	KEF-K20	1	GREASE BOX
		1	FAN BASE CERAMIC SEAL - INSTALLED AT PLANT - FOR GREASE DUCTS
		1	2 YEAR PARTS WARRANTY
21	KEF-K21	1	GREASE BOX
		1	FAN BASE CERAMIC SEAL - INSTALLED AT PLANT - FOR GREASE DUCTS
		1	2 YEAR PARTS WARRANTY
22	KEF-K22	1	GREASE BOX
		1	FAN BASE CERAMIC SEAL - INSTALLED AT PLANT - FOR GREASE DUCTS
		1	2 YEAR PARTS WARRANTY
23	KEF-K23	1	GREASE BOX
		1	FAN BASE CERAMIC SEAL - INSTALLED AT PLANT - FOR GREASE DUCTS
		1	2 YEAR PARTS WARRANTY
24	KEF-K24	1	GREASE BOX
		1	FAN BASE CERAMIC SEAL - INSTALLED AT PLANT - FOR GREASE DUCTS
		1	2 YEAR PARTS WARRANTY
25	KEF-K25	1	BI18 - INLET SERVICE DUCT CONNECTION. USED TO CONNECT TO STANDARD 20" GREASE DUCT OR FIELD WELDED DUCT. INCLUDES (2) 7" RISERS BOLTED TO STANDARD INLET RISER
		1	UTILITY SET GREASE CUP
		1	BI18 - 24" DISCHARGE EXTENSION
		1	BI - DISCHARGE ORIENTATION VERTICAL UPPER LEFT - CW INLET SIDE
		1	BI18 - INLET CONNECTION STANDARD 20" FLANGED GREASE DUCT
		1	UTILITY SET - SPRING VIBRATION ISOLATORS - BI18 / EQUIVALENT SIZED UTILITY SET - INDOOR/OUTDOOR USE
		1	2 YEAR PARTS WARRANTY
26	KEF-K26	1	BI18 - INLET SERVICE DUCT CONNECTION. USED TO CONNECT TO STANDARD 20" GREASE DUCT OR FIELD WELDED DUCT. INCLUDES (2) 7" RISERS BOLTED TO STANDARD INLET RISER
		1	UTILITY SET GREASE CUP
		1	BI18 - 24" DISCHARGE EXTENSION
		1	BI - DISCHARGE ORIENTATION VERTICAL UPPER LEFT - CW INLET SIDE
		1	BI18 - INLET CONNECTION STANDARD 20" FLANGED GREASE DUCT
		1	UTILITY SET - SPRING VIBRATION ISOLATORS - BI18 / EQUIVALENT SIZED UTILITY SET - INDOOR/OUTDOOR USE
		1	2 YEAR PARTS WARRANTY

Alameda County
Dept. of Environmental Health
Approved By: T.Tran

REVISIONS

DESCRIPTION	DATE

CAPTIVEAIRE
www.captiveaire.com
Central CA
8 Adrian Court, Burlingame, CA, 94010 PHONE: (415) 956-2200 FAX: (919) 227-5940 EMAIL: reg91@econair.com

Saltalk Central Kitchen - Fremont, CA
42516 Albrae St,
Fremont, CA, 94538

DATE: 3/9/2022
DWG.#: 5254633
DRAWN BY: T.Thai
SCALE: 3/4" = 1'-0"
MASTER DRAWING
SHEET NO. 10

CO-AR DESIGN, INC.
680 Brea Canyon Rd., Ste. 178
Diamond Bar, CA 91789

Office: 909-598-0186
http:\\www.coardesign.com

Dennis J. Lee, Architect
dennisl@coardesign.com

THESE DRAWINGS ARE THE PROPERTY OF THE ARCHITECT. THE DESIGNS SHOWN AND DESCRIBED HERIN INCLUDING ALL TECHNICAL DRAWINGS ARE PROPRIETARY AND CANNOT BE COPIED, DUPLICATED OR COMMERCIALLY EXPLOITED, IN WHOLE OR IN PART. THE DRAWINGS AND SPECIFICATIONS SHALL NOT BE USED BY THE OWNER ON OTHER PROJECTS, FOR ADDITIONS TO THIS PROJECT, OR FOR COMPLETION OF THIS PROJECT BY OTHERS. THE OWNER AGREES TO HOLD HARMLESS, INDEMNIFY AND DEFEND THE ARCHITECT AGAINST ALL DAMAGES, CLAIMS AND LOSSES, INCLUDING DEFENSE COSTS, ARISING OUT OF ANY REUSE OF THE PLANS AND SPECIFICATIONS WITHOUT THE WRITTEN AUTHORIZATION OF THE ARCHITECT OF RECORD

COPYRIGHT © 2022 CO-AR DESIGN, INC., ALL RIGHTS RESERVED

SEAL

REGISTERED PROFESSIONAL ENGINEER
JIA HUI PAN
M35374
EXP. 6/30/23
MECHANICAL
STATE OF CALIFORNIA

NOTES

JHP Engineering and Design Services Inc.
3103 Independence Drive
Livermore, CA 94551
TEL: 925-409-2508
CEL: 510-468-0613
FAX: 510-788-6039

PROJECT
SALTALK FREMONT KITCHEN TENANT IMPROVEMENT

42550 ALBRAE ST.,
FREMONT, CA 94538

CLIENT

SALTALK, INC.
3334 VICTOR CT.,
SANTA CLARA, CA 95054

SUBMITTALS/ REVISIONS

1	HEALTH/USD SUBMITTAL	04/01/2022
2	2ND BLD. SUBMITTAL	07/22/2022
3	3RD BLD. SUBMITTAL	08/30/2022
4	3RD USD. SUBMITTAL	09/01/2022
5	2ND HEALTH SUBMITTAL	09/29/2022

PROJECT NO:	21127
SCALE:	AS SHOWN
DATE:	2/10/2022
DRAWN BY:	TL / YC
CHECKED BY:	JP

SHEET TITLE
KEF OPTIONS

SHEET NO
M-3.9

BIMcloud: COAR-CONFERENCE - BIMcloud Basic for ARCHICAD 25/202201-Fremont Ghost Kitchen Thursday, February 10, 2022 1:47 PM

FAN OPTIONS 2

FAN UNIT NO	TAG	QTY	DESCRIPTION
27	KEF-K27	1	BI18 - INLET SERVICE DUCT CONNECTION. USED TO CONNECT TO STANDARD 20" GREASE DUCT OR FIELD WELDED DUCT. INCLUDES (2) 7" RISERS BOLTED TO STANDARD INLET RISER
		1	UTILITY SET GREASE CUP
		1	BI18 - 24" DISCHARGE EXTENSION
		1	BI - DISCHARGE ORIENTATION VERTICAL UPPER LEFT - CW INLET SIDE
		1	BI18 - INLET CONNECTION STANDARD 20" FLANGED GREASE DUCT
		1	UTILITY SET - SPRING VIBRATION ISOLATORS - BI18 / EQUIVALENT SIZED UTILITY SET - INDOOR/OUTDOOR USE
		1	2 YEAR PARTS WARRANTY
28	KEF-K28	1	BI18 - INLET SERVICE DUCT CONNECTION. USED TO CONNECT TO STANDARD 20" GREASE DUCT OR FIELD WELDED DUCT. INCLUDES (2) 7" RISERS BOLTED TO STANDARD INLET RISER
		1	UTILITY SET GREASE CUP
		1	BI18 - 24" DISCHARGE EXTENSION
		1	BI - DISCHARGE ORIENTATION VERTICAL UPPER LEFT - CW INLET SIDE
		1	BI18 - INLET CONNECTION STANDARD 20" FLANGED GREASE DUCT
		1	UTILITY SET - SPRING VIBRATION ISOLATORS - BI18 / EQUIVALENT SIZED UTILITY SET - INDOOR/OUTDOOR USE
		1	2 YEAR PARTS WARRANTY
29	MAU-K1	1	SIZE 2 UNTEMPERED COMMERCIAL DOWN DISCHARGE FOR DIRECT DRIVE AHUS
		1	EVAPORATIVE COOLER WIRING HARNESS
		1	SEPARATE 120V WIRING PACKAGE (REQUIRED AND USED ONLY FOR DCV OR PREWIRE WITH VFD) - THREE PHASE ONLY
		1	2 YEAR PARTS WARRANTY
30	MAU-K2	1	SIZE 2 UNTEMPERED COMMERCIAL DOWN DISCHARGE FOR DIRECT DRIVE AHUS
		1	EVAPORATIVE COOLER WIRING HARNESS
		1	SEPARATE 120V WIRING PACKAGE (REQUIRED AND USED ONLY FOR DCV OR PREWIRE WITH VFD) - THREE PHASE ONLY
		1	2 YEAR PARTS WARRANTY
31	MAU-K3	1	SIZE 2 UNTEMPERED COMMERCIAL DOWN DISCHARGE FOR DIRECT DRIVE AHUS
		1	EVAPORATIVE COOLER WIRING HARNESS
		1	SEPARATE 120V WIRING PACKAGE (REQUIRED AND USED ONLY FOR DCV OR PREWIRE WITH VFD) - THREE PHASE ONLY
		1	2 YEAR PARTS WARRANTY
32	MAU-K4	1	SIZE 2 UNTEMPERED COMMERCIAL DOWN DISCHARGE FOR DIRECT DRIVE AHUS
		1	EVAPORATIVE COOLER WIRING HARNESS
		1	SEPARATE 120V WIRING PACKAGE (REQUIRED AND USED ONLY FOR DCV OR PREWIRE WITH VFD) - THREE PHASE ONLY
		1	2 YEAR PARTS WARRANTY
33	MAU-K5	1	SIZE 2 UNTEMPERED COMMERCIAL DOWN DISCHARGE FOR DIRECT DRIVE AHUS
		1	EVAPORATIVE COOLER WIRING HARNESS
		1	SEPARATE 120V WIRING PACKAGE (REQUIRED AND USED ONLY FOR DCV OR PREWIRE WITH VFD) - THREE PHASE ONLY
		1	2 YEAR PARTS WARRANTY
34	MAU-K6	1	SIZE 2 UNTEMPERED COMMERCIAL DOWN DISCHARGE FOR DIRECT DRIVE AHUS
		1	EVAPORATIVE COOLER WIRING HARNESS
		1	SEPARATE 120V WIRING PACKAGE (REQUIRED AND USED ONLY FOR DCV OR PREWIRE WITH VFD) - THREE PHASE ONLY
		1	2 YEAR PARTS WARRANTY
35	MAU-K7	1	SIZE 2 UNTEMPERED COMMERCIAL DOWN DISCHARGE FOR DIRECT DRIVE AHUS
		1	EVAPORATIVE COOLER WIRING HARNESS
		1	SEPARATE 120V WIRING PACKAGE (REQUIRED AND USED ONLY FOR DCV OR PREWIRE WITH VFD) - THREE PHASE ONLY
		1	2 YEAR PARTS WARRANTY
36	MAU-K8	1	SIZE 2 UNTEMPERED COMMERCIAL DOWN DISCHARGE FOR DIRECT DRIVE AHUS
		1	EVAPORATIVE COOLER WIRING HARNESS
		1	SEPARATE 120V WIRING PACKAGE (REQUIRED AND USED ONLY FOR DCV OR PREWIRE WITH VFD) - THREE PHASE ONLY
		1	2 YEAR PARTS WARRANTY
37	MAU-K9	1	SIZE 2 UNTEMPERED COMMERCIAL DOWN DISCHARGE FOR DIRECT DRIVE AHUS
		1	EVAPORATIVE COOLER WIRING HARNESS
		1	SEPARATE 120V WIRING PACKAGE (REQUIRED AND USED ONLY FOR DCV OR PREWIRE WITH VFD) - THREE PHASE ONLY
		1	2 YEAR PARTS WARRANTY
38	MAU-K10	1	EVAPORATIVE COOLER WIRING HARNESS
		1	SEPARATE 120V WIRING PACKAGE (REQUIRED AND USED ONLY FOR DCV OR PREWIRE WITH VFD) - THREE PHASE ONLY
		1	2 YEAR PARTS WARRANTY
39	MAU-K11	1	EVAPORATIVE COOLER WIRING HARNESS
		1	SEPARATE 120V WIRING PACKAGE (REQUIRED AND USED ONLY FOR DCV OR PREWIRE WITH VFD) - THREE PHASE ONLY
		1	2 YEAR PARTS WARRANTY
40	MAU-K12	1	SIZE 2 UNTEMPERED COMMERCIAL DOWN DISCHARGE FOR DIRECT DRIVE AHUS
		1	EVAPORATIVE COOLER WIRING HARNESS
		1	SEPARATE 120V WIRING PACKAGE (REQUIRED AND USED ONLY FOR DCV OR PREWIRE WITH VFD) - THREE PHASE ONLY
		1	2 YEAR PARTS WARRANTY

FAN UNIT NO	TAG	QTY	DESCRIPTION
41	MAU-K13	1	SIZE 2 UNTEMPERED COMMERCIAL DOWN DISCHARGE FOR DIRECT DRIVE AHUS
		1	EVAPORATIVE COOLER WIRING HARNESS
		1	SEPARATE 120V WIRING PACKAGE (REQUIRED AND USED ONLY FOR DCV OR PREWIRE WITH VFD) - THREE PHASE ONLY
		1	2 YEAR PARTS WARRANTY
42	MAU-K14	1	SIZE 2 UNTEMPERED COMMERCIAL DOWN DISCHARGE FOR DIRECT DRIVE AHUS
		1	EVAPORATIVE COOLER WIRING HARNESS
		1	SEPARATE 120V WIRING PACKAGE (REQUIRED AND USED ONLY FOR DCV OR PREWIRE WITH VFD) - THREE PHASE ONLY
		1	2 YEAR PARTS WARRANTY
43	MAU-K15	1	SIZE 2 UNTEMPERED COMMERCIAL DOWN DISCHARGE FOR DIRECT DRIVE AHUS
		1	EVAPORATIVE COOLER WIRING HARNESS
		1	SEPARATE 120V WIRING PACKAGE (REQUIRED AND USED ONLY FOR DCV OR PREWIRE WITH VFD) - THREE PHASE ONLY
		1	2 YEAR PARTS WARRANTY
44	MAU-K16	1	SIZE 2 UNTEMPERED COMMERCIAL DOWN DISCHARGE FOR DIRECT DRIVE AHUS
		1	EVAPORATIVE COOLER WIRING HARNESS
		1	SEPARATE 120V WIRING PACKAGE (REQUIRED AND USED ONLY FOR DCV OR PREWIRE WITH VFD) - THREE PHASE ONLY
		1	2 YEAR PARTS WARRANTY
45	MAU-K17	1	SIZE 2 UNTEMPERED COMMERCIAL DOWN DISCHARGE FOR DIRECT DRIVE AHUS
		1	EVAPORATIVE COOLER WIRING HARNESS
		1	SEPARATE 120V WIRING PACKAGE (REQUIRED AND USED ONLY FOR DCV OR PREWIRE WITH VFD) - THREE PHASE ONLY
		1	2 YEAR PARTS WARRANTY
46	MAU-K18	1	EVAPORATIVE COOLER WIRING HARNESS
		1	SEPARATE 120V WIRING PACKAGE (REQUIRED AND USED ONLY FOR DCV OR PREWIRE WITH VFD) - THREE PHASE ONLY
		1	2 YEAR PARTS WARRANTY
47	MAU-K19	1	EVAPORATIVE COOLER WIRING HARNESS
		1	SEPARATE 120V WIRING PACKAGE (REQUIRED AND USED ONLY FOR DCV OR PREWIRE WITH VFD) - THREE PHASE ONLY
		1	2 YEAR PARTS WARRANTY
48	MAU-K20	1	EVAPORATIVE COOLER WIRING HARNESS
		1	SEPARATE 120V WIRING PACKAGE (REQUIRED AND USED ONLY FOR DCV OR PREWIRE WITH VFD) - THREE PHASE ONLY
		1	2 YEAR PARTS WARRANTY
49	MAU-K21	1	SIZE 2 UNTEMPERED COMMERCIAL DOWN DISCHARGE FOR DIRECT DRIVE AHUS
		1	EVAPORATIVE COOLER WIRING HARNESS
		1	SEPARATE 120V WIRING PACKAGE (REQUIRED AND USED ONLY FOR DCV OR PREWIRE WITH VFD) - THREE PHASE ONLY
		1	2 YEAR PARTS WARRANTY
50	MAU-K22	1	SIZE 2 UNTEMPERED COMMERCIAL DOWN DISCHARGE FOR DIRECT DRIVE AHUS
		1	EVAPORATIVE COOLER WIRING HARNESS
		1	SEPARATE 120V WIRING PACKAGE (REQUIRED AND USED ONLY FOR DCV OR PREWIRE WITH VFD) - THREE PHASE ONLY
		1	2 YEAR PARTS WARRANTY
51	MAU-K23	1	SIZE 2 UNTEMPERED COMMERCIAL DOWN DISCHARGE FOR DIRECT DRIVE AHUS
		1	EVAPORATIVE COOLER WIRING HARNESS
		1	SEPARATE 120V WIRING PACKAGE (REQUIRED AND USED ONLY FOR DCV OR PREWIRE WITH VFD) - THREE PHASE ONLY
		1	2 YEAR PARTS WARRANTY
52	MAU-K24	1	SIZE 2 UNTEMPERED COMMERCIAL DOWN DISCHARGE FOR DIRECT DRIVE AHUS
		1	EVAPORATIVE COOLER WIRING HARNESS
		1	SEPARATE 120V WIRING PACKAGE (REQUIRED AND USED ONLY FOR DCV OR PREWIRE WITH VFD) - THREE PHASE ONLY
		1	2 YEAR PARTS WARRANTY
53	MAU-K25	1	SIZE 2 UNTEMPERED COMMERCIAL DOWN DISCHARGE FOR DIRECT DRIVE AHUS
		1	EVAPORATIVE COOLER WIRING HARNESS
		1	SEPARATE 120V WIRING PACKAGE (REQUIRED AND USED ONLY FOR DCV OR PREWIRE WITH VFD) - THREE PHASE ONLY
		1	2 YEAR PARTS WARRANTY
54	MAU-K26	1	SIZE 2 UNTEMPERED COMMERCIAL DOWN DISCHARGE FOR DIRECT DRIVE AHUS
		1	EVAPORATIVE COOLER WIRING HARNESS
		1	SEPARATE 120V WIRING PACKAGE (REQUIRED AND USED ONLY FOR DCV OR PREWIRE WITH VFD) - THREE PHASE ONLY
		1	2 YEAR PARTS WARRANTY
55	MAU-K27	1	EVAPORATIVE COOLER WIRING HARNESS
		1	SEPARATE 120V WIRING PACKAGE (REQUIRED AND USED ONLY FOR DCV OR PREWIRE WITH VFD) - THREE PHASE ONLY
		1	2 YEAR PARTS WARRANTY
56	MAU-K28	1	EVAPORATIVE COOLER WIRING HARNESS
		1	SEPARATE 120V WIRING PACKAGE (REQUIRED AND USED ONLY FOR DCV OR PREWIRE WITH VFD) - THREE PHASE ONLY
		1	2 YEAR PARTS WARRANTY

FAN ACCESSORIES

FAN UNIT NO	TAG	EXHAUST			SUPPLY			
		GREASE CUP	GRAVITY DAMPER	WALL MOUNT	SIDE DISCHARGE	GRAVITY DAMPER	MOTORIZED DAMPER	WALL MOUNT
1	KEF-K1	YES						
2	KEF-K2	YES						
3	KEF-K3	YES						
4	KEF-K4	YES						
5	KEF-K5	YES						
6	KEF-K6	YES						
7	KEF-K7	YES						
8	KEF-K8	YES						
9	KEF-K9	YES						
10	KEF-K10	YES						
11	KEF-K11	YES						
12	KEF-K12	YES						
13	KEF-K13	YES						
14	KEF-K14	YES						
15	KEF-K15	YES						
16	KEF-K16	YES						
17	KEF-K17	YES						
18	KEF-K18	YES						
19	KEF-K19	YES						
20	KEF-K20	YES						
21	KEF-K21	YES						
22	KEF-K22	YES						
23	KEF-K23	YES						
24	KEF-K24	YES						
25	KEF-K25	YES						
26	KEF-K26	YES						
27	KEF-K27	YES						
28	KEF-K28	YES						
29	MAU-K1							
30	MAU-K2							
31	MAU-K3							
32	MAU-K4							
33	MAU-K5							
34	MAU-K6							
35	MAU-K7							
36	MAU-K8							
37	MAU-K9							
38	MAU-K10				YES			
39	MAU-K11				YES			
40	MAU-K12							
41	MAU-K13							
42	MAU-K14							
43	MAU-K15							
44	MAU-K16							
45	MAU-K17							
46	MAU-K18				YES			
47	MAU-K19				YES			
48	MAU-K20				YES			
49	MAU-K21							
50	MAU-K22							
51	MAU-K23							
52	MAU-K24							
53	MAU-K25							
54	MAU-K26							
55	MAU-K27				YES			
56	MAU-K28				YES			

Alameda County
Dept. of Environmental Health
Approved By: T. Tran

REVISIONS

DESCRIPTION	DATE

CAPTIVEAIRE
Central CA
www.captiveaire.com
8 Adrian Court, Burlingame, CA, 94010 PHONE: (415) 956-2200 FAX: (919) 227-5940 EMAIL: reg91@econair.com

Saltalk Central Kitchen - Fremont, CA
42516 Albrae St,
Fremont, CA, 94538

DATE: 3/9/2022
DWG.#: 5254633
DRAWN BY: T.Thai
SCALE: 3/4" = 1'-0"
MASTER DRAWING
SHEET NO. 11

CO-AR DESIGN, INC.
680 Brea Canyon Rd., Ste. 178
Diamond Bar, CA 91789
Office: 909-598-0186
http:\\www.coardesign.com
Dennis J. Lee, Architect
dennisl@coardesign.com

THESE DRAWINGS ARE THE PROPERTY OF THE ARCHITECT. THE DESIGNS SHOWN AND DESCRIBED HERIN INCLUDING ALL TECHNICAL DRAWINGS ARE PROPRIETARY AND CANNOT BE COPIED, DUPLICATED OR COMMERCIALLY EXPLOITED, IN WHOLE OR IN PART. THE DRAWINGS AND SPECIFICATIONS SHALL NOT BE USED BY THE OWNER ON OTHER PROJECTS, FOR ADDITIONS TO THIS PROJECT, OR FOR COMPLETION OF THIS PROJECT BY OTHERS THE OWNER AGREES TO HOLD HARMLESS, INDEMNIFY AND DEFEND THE ARCHITECT AGAINST ALL DAMAGES, CLAIMS AND LOSSES, INCLUDING DEFENSE COSTS, ARISING OUT OF ANY REUSE OF THE PLANS AND SPECIFICATIONS WITHOUT THE WRITTEN AUTHORIZATION OF THE ARCHITECT OF RECORD.

COPYRIGHT © 2022 CO-AR DESIGN, INC., ALL RIGHTS RESERVED

SEAL
REGISTERED PROFESSIONAL ENGINEER
JIA HUI PAN
M35374
EXP 6/30/23
MECHANICAL
STATE OF CALIFORNIA

NOTES

JHP Engineering and Design Services Inc.
3103 Independence Drive
Livermore, CA 94551
TEL: 925-409-2508
CEL: 510-468-0613
FAX: 510-788-6039

PROJECT
SALTALK FREMONT KITCHEN TENANT IMPROVEMENT

42550 ALBRAE ST.,
FREMONT, CA 94538

CLIENT
SALTALK, INC.
3334 VICTOR CT.,
SANTA CLARA, CA 95054

SUBMITTALS/ REVISIONS

1	HEALTH/USD SUBMITTAL	04/01/2022
2	2ND BLD. SUBMITTAL	07/22/2022
3	3RD BLD SUBMITTAL	08/30/2022
4	3RD USD. SUBMITTAL	09/01/2022
5	2ND HEALTH SUBMITTAL	09/29/2022

PROJECT NO: 21127
SCALE: AS SHOWN
DATE: 2/10/2022
DRAWN BY: TL / YC
CHECKED BY: JP

SHEET TITLE
MAU OPTIONS

SHEET NO
M-4.0

BIMcloud: COAR CONFERENCE - BIMcloud Basic for ARCHICAD 25/202201 Fremont Ghost Kitchen Thursday, February 10, 2022 1:47 PM

CURB ASSEMBLIES

NO	ON FAN	TAG	WEIGHT	ITEM	SIZE
1	# 1	KEF-K1	48 LBS	RAIL	4.000"W X 48.000"L X 12.000"H ALONG WIDTH, RIGHT COMES AS A SET OF 2.
2	# 2	KEF-K2	48 LBS	RAIL	4.000"W X 48.000"L X 12.000"H ALONG WIDTH, RIGHT COMES AS A SET OF 2.
3	# 3	KEF-K3	41 LBS	CURB	26.500"W X 26.500"L X 20.000"H ALONG LENGTH, RIGHT VENTED HINGED.
4	# 4	KEF-K4	48 LBS	RAIL	4.000"W X 48.000"L X 12.000"H ALONG WIDTH, RIGHT COMES AS A SET OF 2.
5	# 5	KEF-K5	48 LBS	RAIL	4.000"W X 48.000"L X 12.000"H ALONG WIDTH, RIGHT COMES AS A SET OF 2.
6	# 6	KEF-K6	48 LBS	RAIL	4.000"W X 48.000"L X 12.000"H ALONG WIDTH, RIGHT COMES AS A SET OF 2.
7	# 7	KEF-K7	48 LBS	RAIL	4.000"W X 48.000"L X 12.000"H ALONG WIDTH, RIGHT COMES AS A SET OF 2.
8	# 8	KEF-K8	48 LBS	RAIL	4.000"W X 48.000"L X 12.000"H ALONG WIDTH, RIGHT COMES AS A SET OF 2.
9	# 9	KEF-K9	48 LBS	RAIL	4.000"W X 48.000"L X 12.000"H ALONG WIDTH, RIGHT COMES AS A SET OF 2.
10	# 10	KEF-K10	41 LBS	CURB	26.500"W X 26.500"L X 20.000"H ALONG LENGTH, RIGHT VENTED HINGED.
11	# 11	KEF-K11	41 LBS	CURB	26.500"W X 26.500"L X 20.000"H ALONG LENGTH, RIGHT VENTED HINGED.
12	# 12	KEF-K12	41 LBS	CURB	26.500"W X 26.500"L X 20.000"H ALONG LENGTH, RIGHT VENTED HINGED.
13	# 13	KEF-K13	41 LBS	CURB	26.500"W X 26.500"L X 20.000"H ALONG LENGTH, RIGHT VENTED HINGED.
14	# 14	KEF-K14	41 LBS	CURB	26.500"W X 26.500"L X 20.000"H ALONG LENGTH, RIGHT VENTED HINGED.
15	# 15	KEF-K15	41 LBS	CURB	26.500"W X 26.500"L X 20.000"H ALONG LENGTH, RIGHT VENTED HINGED.
16	# 16	KEF-K16	41 LBS	CURB	26.500"W X 26.500"L X 20.000"H ALONG LENGTH, RIGHT VENTED HINGED.
17	# 17	KEF-K17	41 LBS	CURB	26.500"W X 26.500"L X 20.000"H ALONG LENGTH, RIGHT VENTED HINGED.
18	# 18	KEF-K18	41 LBS	CURB	26.500"W X 26.500"L X 20.000"H ALONG LENGTH, RIGHT VENTED HINGED.
19	# 19	KEF-K19	41 LBS	CURB	26.500"W X 26.500"L X 20.000"H ALONG LENGTH, RIGHT VENTED HINGED.
20	# 20	KEF-K20	41 LBS	CURB	26.500"W X 26.500"L X 20.000"H ALONG LENGTH, RIGHT VENTED HINGED.
21	# 21	KEF-K21	41 LBS	CURB	26.500"W X 26.500"L X 20.000"H ALONG LENGTH, RIGHT VENTED HINGED.
22	# 22	KEF-K22	41 LBS	CURB	26.500"W X 26.500"L X 20.000"H ALONG LENGTH, RIGHT VENTED HINGED.
23	# 23	KEF-K23	41 LBS	CURB	26.500"W X 26.500"L X 20.000"H ALONG LENGTH, RIGHT VENTED HINGED.
24	# 24	KEF-K24	48 LBS	CURB	31.500"W X 31.500"L X 20.000"H ALONG LENGTH, RIGHT VENTED HINGED.
25	# 25	KEF-K25	48 LBS	RAIL	4.000"W X 48.000"L X 12.000"H ALONG WIDTH, RIGHT COMES AS A SET OF 2.
26	# 26	KEF-K26	48 LBS	RAIL	4.000"W X 48.000"L X 12.000"H ALONG WIDTH, RIGHT COMES AS A SET OF 2.
27	# 27	KEF-K27	48 LBS	RAIL	4.000"W X 48.000"L X 12.000"H ALONG WIDTH, RIGHT COMES AS A SET OF 2.
28	# 28	KEF-K28	48 LBS	RAIL	4.000"W X 48.000"L X 12.000"H ALONG WIDTH, RIGHT COMES AS A SET OF 2.
29	# 29	MAU-K1	52 LBS	CURB	31.000"W X 31.000"L X 20.000"H ALONG LENGTH, RIGHT.
	# 29			RAIL	4.000"W X 4.000"L X 36.000"H RIGHT.
30	# 30	MAU-K1	52 LBS	CURB	31.000"W X 31.000"L X 20.000"H ALONG LENGTH, RIGHT.
	# 30			RAIL	4.000"W X 4.000"L X 36.000"H ALONG LENGTH, RIGHT.
31	# 31	MAU-K3	52 LBS	CURB	31.000"W X 31.000"L X 20.000"H ALONG LENGTH, RIGHT.
	# 31			RAIL	4.000"W X 4.000"L X 36.000"H ALONG LENGTH, RIGHT.
32	# 32	MAU-K4	52 LBS	CURB	31.000"W X 31.000"L X 20.000"H ALONG LENGTH, RIGHT.
	# 32			RAIL	4.000"W X 4.000"L X 36.000"H ALONG LENGTH, RIGHT.
33	# 33	MAU-K5	52 LBS	CURB	31.000"W X 31.000"L X 20.000"H ALONG LENGTH, RIGHT.
	# 33			RAIL	4.000"W X 4.000"L X 36.000"H ALONG LENGTH, RIGHT.
34	# 34	MAU-K6	52 LBS	CURB	31.000"W X 31.000"L X 20.000"H ALONG LENGTH, RIGHT.
	# 34			RAIL	4.000"W X 4.000"L X 36.000"H ALONG LENGTH, RIGHT.
35	# 35	MAU-K7	52 LBS	CURB	31.000"W X 31.000"L X 20.000"H ALONG LENGTH, RIGHT.
	# 35			RAIL	4.000"W X 4.000"L X 36.000"H ALONG LENGTH, RIGHT.
36	# 36	MAU-K8	52 LBS	CURB	31.000"W X 31.000"L X 20.000"H ALONG LENGTH, RIGHT.
	# 36			RAIL	4.000"W X 4.000"L X 36.000"H ALONG LENGTH, RIGHT.
37	# 37	MAU-K9	52 LBS	CURB	31.000"W X 31.000"L X 20.000"H ALONG LENGTH, RIGHT.
	# 37			RAIL	4.000"W X 4.000"L X 36.000"H ALONG LENGTH, RIGHT.
38	# 38	MAU-K10	52 LBS	CURB	31.000"W X 31.000"L X 20.000"H ALONG LENGTH, RIGHT.
	# 38			RAIL	4.000"W X 4.000"L X 36.000"H ALONG LENGTH, RIGHT.
39	# 39	MAU-K11	52 LBS	CURB	31.000"W X 31.000"L X 20.000"H ALONG LENGTH, RIGHT.
	# 39			RAIL	4.000"W X 4.000"L X 36.000"H ALONG LENGTH, RIGHT.
40	# 40	MAU-K12	52 LBS	CURB	31.000"W X 31.000"L X 20.000"H ALONG LENGTH, RIGHT.
	# 40			RAIL	4.000"W X 4.000"L X 36.000"H ALONG LENGTH, RIGHT.
41	# 41	MAU-K13	52 LBS	CURB	31.000"W X 31.000"L X 20.000"H ALONG LENGTH, RIGHT.
	# 41			RAIL	4.000"W X 4.000"L X 36.000"H ALONG LENGTH, RIGHT.
42	# 42	MAU-K14	52 LBS	CURB	31.000"W X 31.000"L X 20.000"H ALONG LENGTH, RIGHT.
	# 42			RAIL	4.000"W X 4.000"L X 36.000"H ALONG LENGTH, RIGHT.
43	# 43	MAU-K15	52 LBS	CURB	31.000"W X 31.000"L X 20.000"H ALONG LENGTH, RIGHT.
	# 43			RAIL	4.000"W X 4.000"L X 36.000"H ALONG LENGTH, RIGHT.
44	# 44	MAU-K16	52 LBS	CURB	31.000"W X 31.000"L X 20.000"H ALONG LENGTH, RIGHT.
	# 44			RAIL	4.000"W X 4.000"L X 36.000"H ALONG LENGTH, RIGHT.
45	# 45	MAU-K17	52 LBS	CURB	31.000"W X 31.000"L X 20.000"H ALONG LENGTH, RIGHT.
	# 45			RAIL	4.000"W X 4.000"L X 36.000"H ALONG LENGTH, RIGHT.
46	# 46	MAU-K18	52 LBS	CURB	31.000"W X 31.000"L X 20.000"H ALONG LENGTH, RIGHT.
	# 46			RAIL	4.000"W X 4.000"L X 36.000"H ALONG LENGTH, RIGHT.
47	# 47	MAU-K19	52 LBS	CURB	31.000"W X 31.000"L X 20.000"H ALONG LENGTH, RIGHT.
	# 47			RAIL	4.000"W X 4.000"L X 36.000"H ALONG LENGTH, RIGHT.
48	# 48	MAU-K20	52 LBS	CURB	31.000"W X 31.000"L X 20.000"H ALONG LENGTH, RIGHT.
	# 48			RAIL	4.000"W X 4.000"L X 36.000"H ALONG LENGTH, RIGHT.
49	# 49	MAU-K21	52 LBS	CURB	31.000"W X 31.000"L X 20.000"H ALONG LENGTH, RIGHT.
	# 49			RAIL	4.000"W X 4.000"L X 36.000"H ALONG LENGTH, RIGHT.
50	# 50	MAU-K1	52 LBS	CURB	31.000"W X 31.000"L X 20.000"H ALONG LENGTH, RIGHT.
	# 50			RAIL	4.000"W X 4.000"L X 36.000"H ALONG LENGTH, RIGHT.
51	# 51	MAU-K23	52 LBS	CURB	31.000"W X 31.000"L X 20.000"H ALONG LENGTH, RIGHT.
	# 51			RAIL	4.000"W X 4.000"L X 36.000"H ALONG LENGTH, RIGHT.
52	# 52	MAU-K24	52 LBS	CURB	31.000"W X 31.000"L X 20.000"H ALONG LENGTH, RIGHT.
	# 52			RAIL	4.000"W X 4.000"L X 36.000"H ALONG LENGTH, RIGHT.
53	# 53	MAU-K25	52 LBS	CURB	31.000"W X 31.000"L X 20.000"H ALONG LENGTH, RIGHT.
	# 53			RAIL	4.000"W X 4.000"L X 36.000"H ALONG LENGTH, RIGHT.
54	# 54	MAU-K26	52 LBS	CURB	31.000"W X 31.000"L X 20.000"H ALONG LENGTH, RIGHT.
	# 54			RAIL	4.000"W X 4.000"L X 36.000"H ALONG LENGTH, RIGHT.
55	# 55	MAU-K27	52 LBS	CURB	31.000"W X 31.000"L X 20.000"H ALONG LENGTH, RIGHT.
	# 55			RAIL	4.000"W X 4.000"L X 36.000"H ALONG LENGTH, RIGHT.
56	# 56	MAU-K28	52 LBS	CURB	31.000"W X 31.000"L X 20.000"H ALONG LENGTH, RIGHT.
	# 56			RAIL	4.000"W X 4.000"L X 36.000"H ALONG LENGTH, RIGHT.

Alameda County
Dept. of Environmental Health
Approved By: T. Tran

REVISIONS

DESCRIPTION	DATE
△	
△	
△	
△	

CAPTIVEAIRE
Central CA
www.captiveaire.com
8 Adrian Court, Burlingame, CA, 94010 PHONE: (415) 956-2200 FAX: (919) 227-5940 EMAIL: reg91@econair.com

Saltalk Central Kitchen - Fremont, CA
42516 Albrae St,
Fremont, CA, 94538

DATE: 3/9/2022

DWG.#: 5254633

DRAWN BY: T.Thai

SCALE: 3/4" = 1'-0"

MASTER DRAWING

SHEET NO. 12

CO-AR DESIGN, INC.
680 Brea Canyon Rd., Ste. 178
Diamond Bar, CA 91789

Office: 909-598-0186
http:\\www.coardesign.com

Dennis J. Lee, Architect
dennisl@coardesign.com

THESE DRAWINGS ARE THE PROPERTY OF THE ARCHITECT. THE DESIGNS SHOWN AND DESCRIBED HERIN INCLUDING ALL TECHNICAL DRAWINGS ARE PROPRIETARY AND CANNOT BE COPIED, DUPLICATED OR COMMERCIALLY EXPLOITED, IN WHOLE OR IN PART. THE DRAWINGS AND SPECIFICATIONS SHALL NOT BE USED BY THE OWNER ON OTHER PROJECTS, FOR ADDITIONS TO THIS PROJECT, OR FOR COMPLETION OF THIS PROJECT BY OTHERS. THE OWNER AGREES TO HOLD HARMLESS, INDEMNIFY AND DEFEND THE ARCHITECT AGAINST ALL DAMAGES, CLAIMS AND LOSSES, INCLUDING DEFENSE COSTS, ARISING OUT OF ANY REUSE OF THE PLANS AND SPECIFICATIONS WITHOUT THE WRITTEN AUTHORIZATION OF THE ARCHITECT OF RECORD.

COPYRIGHT © 2022 CO-AR DESIGN, INC., ALL RIGHTS RESERVED.

SEAL:

REGISTERED PROFESSIONAL ENGINEER
JIA HUI PAN
M35374
EXP. 6/30/23
MECHANICAL
STATE OF CALIFORNIA

NOTES

JHP Engineering and Design Services Inc.
3103 Independence Drive
Livermore, CA 94551
TEL: 925-409-2508
CEL: 510-468-0613
FAX: 510-788-6039

PROJECT:
SALTALK FREMONT KITCHEN TENANT IMPROVEMENT

42550 ALBRAE ST.,
FREMONT, CA 94538

CLIENT
SALTALK, INC.
3334 VICTOR CT.,
SANTA CLARA, CA 95054

SUBMITTALS/ REVISIONS

1	HEALTH/USD SUBMITTAL	04/01/2022
2	2ND BLD. SUBMITTAL	07/22/2022
3	3RD BLD. SUBMITTAL	08/30/2022
4	3RD USD. SUBMITTAL	09/01/2022
5	2ND HEALTH SUBMITTAL	09/29/2022

PROJECT NO.	21127
SCALE:	AS SHOWN
DATE.	2/10/2022
DRAWN BY:	TL / YC
CHECKED BY:	JP

SHEET TITLE
KEF AND MAU CURB SCHEDULES

SHEET NO.
M-4.1

BIMcloud: COAR-CONFERENCE - BIMcloud Basic for ARCHICAD 25/202201-Fremont-Ghost Kitchen Thursday, February 10, 2022 1:47 PM

FAN SOUND DATA

FAN UNIT NO	TAG	MOTOR	SOUND DATA			OCTAVE BAND SOUND DATA								
			LWA	SONES @ 5 FT	DBA @ 5 FT	DISTANCE (FT)	63 HZ	125 HZ	250 HZ	500 HZ	1 KHZ	2 KHZ	4 KHZ	8 KHZ
1	KEF-K1	EXHAUST	85.1	21	73.6	5	83.1	84.8	84.1	83.7	79.8	75.8	68.2	62.9
2	KEF-K2	EXHAUST	85.1	21	73.6	5	83.1	84.8	84.1	83.7	79.8	75.8	68.2	62.9
3	KEF-K3	EXHAUST	82.7	18.9	71.2	5	76.9	81.8	88.4	79.3	72	69.6	63.5	57.5
4	KEF-K4	EXHAUST	85.1	21	73.6	5	83.1	84.8	84.1	83.7	79.8	75.8	68.2	62.9
5	KEF-K5	EXHAUST	85.1	21	73.6	5	83.1	84.8	84.1	83.7	79.8	75.8	68.2	62.9
6	KEF-K6	EXHAUST	85.1	21	73.6	5	83.1	84.8	84.1	83.7	79.8	75.8	68.2	62.9
7	KEF-K7	EXHAUST	85.1	21	73.6	5	83.1	84.8	84.1	83.7	79.8	75.8	68.2	62.9
8	KEF-K8	EXHAUST	85.1	21	73.6	5	83.1	84.8	84.1	83.7	79.8	75.8	68.2	62.9
9	KEF-K9	EXHAUST	85.1	21	73.6	5	83.1	84.8	84.1	83.7	79.8	75.8	68.2	62.9
10	KEF-K10	EXHAUST	82.7	18.9	71.2	5	76.9	81.8	88.4	79.3	72	69.6	63.5	57.5
11	KEF-K11	EXHAUST	82.7	18.9	71.2	5	76.9	81.8	88.4	79.3	72	69.6	63.5	57.5
12	KEF-K12	EXHAUST	82.7	18.9	71.2	5	76.9	81.8	88.4	79.3	72	69.6	63.5	57.5
13	KEF-K13	EXHAUST	82.7	18.9	71.2	5	76.9	81.8	88.4	79.3	72	69.6	63.5	57.5
14	KEF-K14	EXHAUST	82.7	18.9	71.2	5	76.9	81.8	88.4	79.3	72	69.6	63.5	57.5
15	KEF-K15	EXHAUST	82.7	18.9	71.2	5	76.9	81.8	88.4	79.3	72	69.6	63.5	57.5
16	KEF-K16	EXHAUST	82.7	18.9	71.2	5	76.9	81.8	88.4	79.3	72	69.6	63.5	57.5
17	KEF-K17	EXHAUST	82.7	18.9	71.2	5	76.9	81.8	88.4	79.3	72	69.6	63.5	57.5
18	KEF-K18	EXHAUST	82.7	18.9	71.2	5	76.9	81.8	88.4	79.3	72	69.6	63.5	57.5
19	KEF-K19	EXHAUST	82.7	18.9	71.2	5	76.9	81.8	88.4	79.3	72	69.6	63.5	57.5
20	KEF-K20	EXHAUST	82.7	18.9	71.2	5	76.9	81.8	88.4	79.3	72	69.6	63.5	57.5
21	KEF-K21	EXHAUST	82.7	18.9	71.2	5	76.9	81.8	88.4	79.3	72	69.6	63.5	57.5
22	KEF-K22	EXHAUST	82.7	18.9	71.2	5	76.9	81.8	88.4	79.3	72	69.6	63.5	57.5
23	KEF-K23	EXHAUST	82.7	18.9	71.2	5	76.9	81.8	88.4	79.3	72	69.6	63.5	57.5
24	KEF-K24	EXHAUST	78.6	16.3	67.1	5	76.4	87.6	82.2	73	69.9	66.8	62.1	57.7
25	KEF-K25	EXHAUST	85.1	21	73.6	5	83.1	84.8	84.1	83.7	79.8	75.8	68.2	62.9
26	KEF-K26	EXHAUST	85.1	21	73.6	5	83.1	84.8	84.1	83.7	79.8	75.8	68.2	62.9
27	KEF-K27	EXHAUST	85.1	21	73.6	5	83.1	84.8	84.1	83.7	79.8	75.8	68.2	62.9
28	KEF-K28	EXHAUST	86.6	23	75.1	5	84.2	86.4	85.2	85.2	81.5	77.5	70.2	64.6
29	MAU-K1	SUPPLY	79.6	16.2	68.1	5	75.8	83.4	78	77.4	73.6	70.6	67.5	63.7
30	MAU-K2	SUPPLY	79.6	16.2	68.1	5	75.8	83.4	78	77.4	73.6	70.6	67.5	63.7
31	MAU-K3	SUPPLY	76.2	13.4	64.7	5	73.4	81.1	75.7	73.6	69.9	67.2	63.9	60
32	MAU-K4	SUPPLY	79.6	16.2	68.1	5	75.8	83.4	78	77.4	73.6	70.6	67.5	63.7
33	MAU-K5	SUPPLY	79.6	16.2	68.1	5	75.8	83.4	78	77.4	73.6	70.6	67.5	63.7
34	MAU-K6	SUPPLY	79.6	16.2	68.1	5	75.8	83.4	78	77.4	73.6	70.6	67.5	63.7
35	MAU-K7	SUPPLY	79.6	16.2	68.1	5	75.8	83.4	78	77.4	73.6	70.6	67.5	63.7
36	MAU-K8	SUPPLY	79.6	16.2	68.1	5	75.8	83.4	78	77.4	73.6	70.6	67.5	63.7
37	MAU-K9	SUPPLY	79.6	16.2	68.1	5	75.8	83.4	78	77.4	73.6	70.6	67.5	63.7
38	MAU-K10	SUPPLY	76.2	13.4	64.7	5	73.4	81.1	75.7	73.6	69.9	67.2	63.9	60
39	MAU-K11	SUPPLY	76.2	13.4	64.7	5	73.4	81.1	75.7	73.6	69.9	67.2	63.9	60
40	MAU-K12	SUPPLY	76.2	13.4	64.7	5	73.4	81.1	75.7	73.6	69.9	67.2	63.9	60
41	MAU-K13	SUPPLY	76.2	13.4	64.7	5	73.4	81.1	75.7	73.6	69.9	67.2	63.9	60
42	MAU-K14	SUPPLY	76.2	13.4	64.7	5	73.4	81.1	75.7	73.6	69.9	67.2	63.9	60
43	MAU-K15	SUPPLY	76.2	13.4	64.7	5	73.4	81.1	75.7	73.6	69.9	67.2	63.9	60
44	MAU-K16	SUPPLY	76.2	13.4	64.7	5	73.4	81.1	75.7	73.6	69.9	67.2	63.9	60
45	MAU-K17	SUPPLY	76.2	13.4	64.7	5	73.4	81.1	75.7	73.6	69.9	67.2	63.9	60
46	MAU-K18	SUPPLY	76.2	13.4	64.7	5	73.4	81.1	75.7	73.6	69.9	67.2	63.9	60
47	MAU-K19	SUPPLY	76.2	13.4	64.7	5	73.4	81.1	75.7	73.6	69.9	67.2	63.9	60
48	MAU-K20	SUPPLY	76.2	13.4	64.7	5	73.4	81.1	75.7	73.6	69.9	67.2	63.9	60
49	MAU-K21	SUPPLY	76.2	13.4	64.7	5	73.4	81.1	75.7	73.6	69.9	67.2	63.9	60
50	MAU-K22	SUPPLY	76.2	13.4	64.7	5	73.4	81.1	75.7	73.6	69.9	67.2	63.9	60
51	MAU-K23	SUPPLY	76.2	13.4	64.7	5	73.4	81.1	75.7	73.6	69.9	67.2	63.9	60
52	MAU-K24	SUPPLY	79	15.7	67.5	5	75.4	83	77.6	76.8	73	70	66.9	63.1
53	MAU-K25	SUPPLY	76.2	13.4	64.7	5	73.4	81.1	75.7	73.6	69.9	67.2	63.9	60
54	MAU-K26	SUPPLY	76.2	13.4	64.7	5	73.4	81.1	75.7	73.6	69.9	67.2	63.9	60
55	MAU-K27	SUPPLY	79.6	16.2	68.1	5	75.8	83.4	78	77.4	73.6	70.6	67.5	63.7
56	MAU-K28	SUPPLY	81.8	18.6	70.3	5	77.3	85	79.5	79.9	76	72.9	69.8	66.1

FANS #1 (KEF-K1), #2 (KEF-K2), #4 (KEF-K4), #5 (KEF-K5), #6 (KEF-K6), #7 (KEF-K7), #8 (KEF-K8), #9 (KEF-K9), #25 (KEF-K25), #26 (KEF-K26), #27 (KEF-K27), #28 (KEF-K28) - USBI18DD-RM EXHAUST FAN

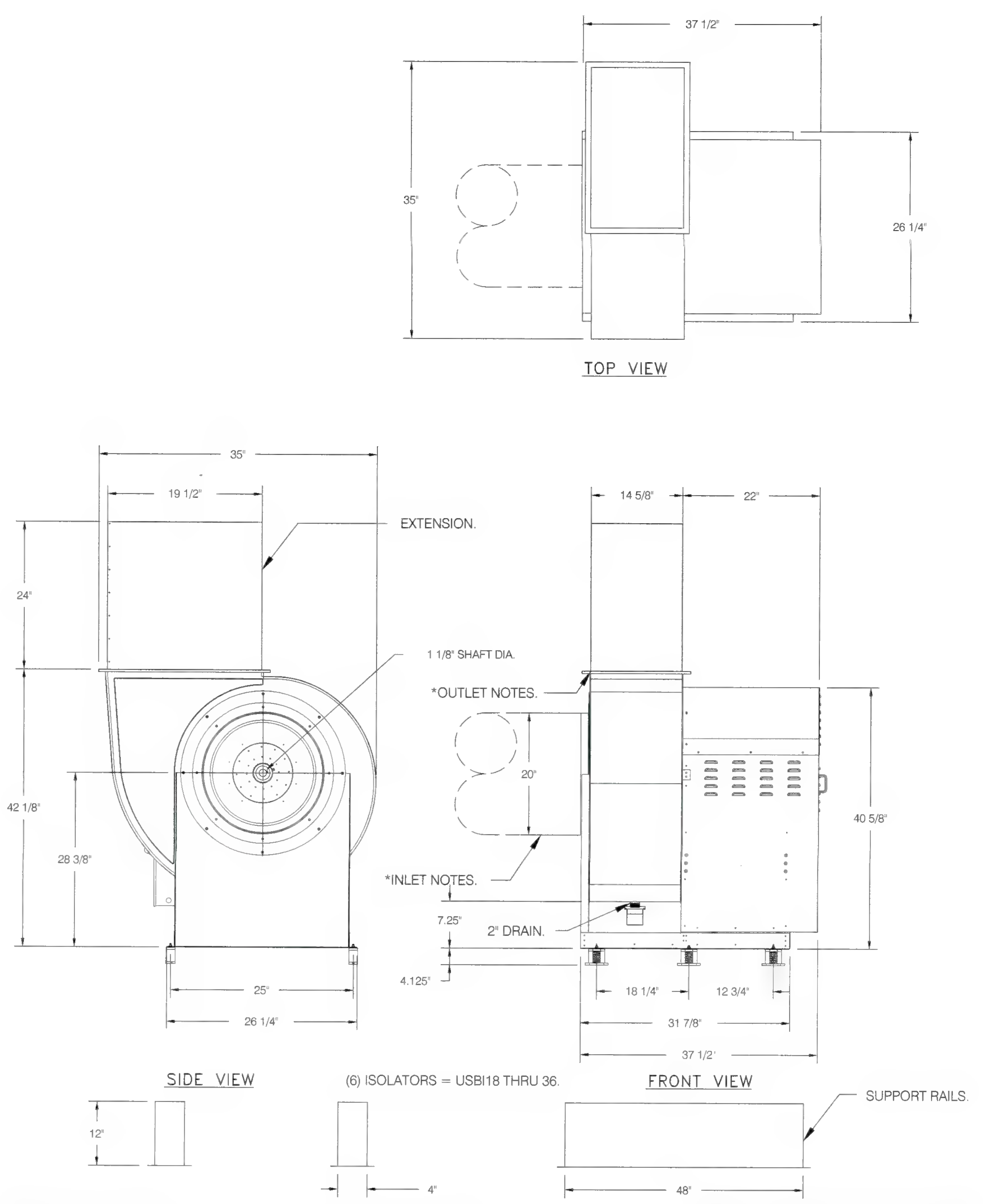

* INLET/OUTLET NOTES:
LENGTH OF THE STRAIGHT DUCT ON THE INLET AND OUTLET TO BE 3 TIMES THE EQUIVALENT DUCT DIAMETER BEFORE CONNECTING TO ANY FITTINGS SUCH AS ELBOWS TO AVOID SYSTEM EFFECT.

NORMAL TEMPERATURE TEST DIRECT DRIVE
EXHAUST FAN MUST OPERATE CONTINUOUSLY WHILE EXHAUSTING AIR AT 350°F (176°C) UNTIL ALL FAN PARTS HAVE REACHED THERMAL EQUILIBRIUM, AND WITHOUT ANY DETERIORATING EFFECTS TO THE FAN WHICH WOULD CAUSE UNSAFE OPERATION.

UNIT PLAN VIEW CORNER WEIGHTS:

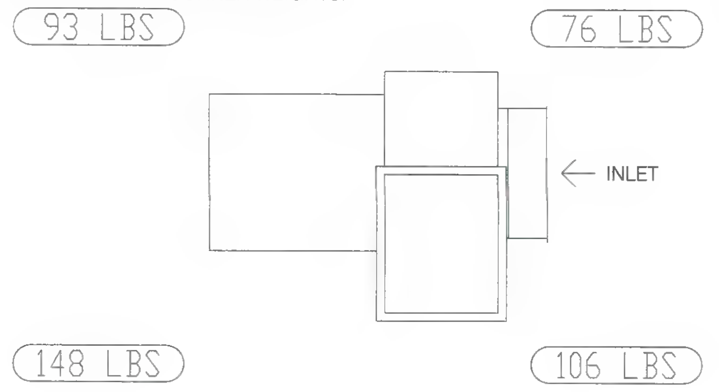

CORNER WEIGHTS ARE CALCULATED BASED ON VERTICAL DISCHARGE. SUPPORT DUCT PROPERLY BEFORE FAN TO ENSURE CORNER WEIGHTS ARE NOT AFFECTED.

Alameda County
Dept. of Environmental Health
Approved By: T. Tran

FEATURES:

- ROOF MOUNTED FANS.
- UL705.
- UL762 AND ULC-S645 (RESTAURANT MODEL).
- HIGH HEAT OPERATION DIRECT DRIVE 350°F (176°C).
- HEAT SLINGER.
- NEMA 3R SAFETY DISCONNECT SWITCH.
- GREASE CLASSIFICATION TESTING.
- 2" DRAIN.
- MOTOR WEATHER COVER.
- FULLY SEALED SCROLL HOUSING.
- SCROLL ACCESS DOOR.
- FLANGE 1 1/4".

OPTIONS

BI18 - INLET SERVICE DUCT CONNECTION. USED TO CONNECT TO STANDARD 20" GREASE DUCT OR FIELD WELDED DUCT. INCLUDES (2) 7" RISERS BOLTED TO STANDARD INLET RISER.
UTILITY SET GREASE CUP.
BI18 - 24" DISCHARGE EXTENSION.
BI - DISCHARGE ORIENTATION VERTICAL UPPER LEFT - CW INLET SIDE.
BI18 - INLET CONNECTION STANDARD 20" FLANGED GREASE DUCT.
UTILITY SET - SPRING VIBRATION ISOLATORS - BI18 / EQUIVALENT SIZED
UTILITY SET - INDOOR/OUTDOOR USE.
2 YEAR PARTS WARRANTY.

REVISIONS

	DESCRIPTION	DATE:
△		
△		
△		
△		

www.captiveaire.com
Central CA
8 Adrian Court, Burlingame, CA, 94010 PHONE: (415) 956-2200 FAX: (919) 227-5940 EMAIL: reg91@econair.com

Saltalk Central Kitchen - Fremont, CA
42516 Albrae St,
Fremont, CA, 94538

DATE: 3/9/2022

DWG.#: 5254633

DRAWN BY: T.Thai

SCALE: 3/4" = 1'-0"

MASTER DRAWING

SHEET NO. 13

CO-AR DESIGN, INC.
680 Brea Canyon Rd., Ste. 178
Diamond Bar, CA 91789

Office: 909-598-0186
http:\\www.coardesign.com

Dennis J. Lee, Architect
dennisl@coardesign.com

THESE DRAWINGS ARE THE PROPERTY OF THE ARCHITECT. THE DESIGNS SHOWN AND DESCRIBED HERIN INCLUDING ALL TECHNICAL DRAWINGS ARE PROPRIETARY AND CANNOT BE COPIED, DUPLICATED OR COMMERCIALLY EXPLOITED, IN WHOLE OR IN PART. THE DRAWINGS AND SPECIFICATIONS SHALL NOT BE USED BY THE OWNER ON OTHER PROJECTS, FOR ADDITIONS TO THIS PROJECT, OR FOR COMPLETION OF THIS PROJECT BY OTHERS. THE OWNER AGREES TO HOLD HARMLESS, INDEMNIFY AND DEFEND THE ARCHITECT AGAINST ALL DAMAGES, CLAIMS AND LOSSES, INCLUDING DEFENSE COSTS, ARISING OUT OF ANY REUSE OF THE PLANS AND SPECIFICATIONS WITHOUT THE WRITTEN AUTHORIZATION OF THE ARCHITECT OF RECORD.

COPYRIGHT © 2022 CO-AR DESIGN, INC., ALL RIGHTS RESERVED.

SEAL

REGISTERED PROFESSIONAL ENGINEER
JIA HUI PAN
M35374
EXP. 6/30/23
MECHANICAL
STATE OF CALIFORNIA

NOTES

JHP Engineering and Design Services Inc.
3103 Independence Drive
Livermore, CA 94551
TEL: 925-409-2508
CEL: 510-468-0613
FAX: 510-788-6039

PROJECT:
SALTALK FREMONT KITCHEN TENANT IMPROVEMENT

42550 ALBRAE ST.,
FREMONT, CA 94538

CLIENT

SALTALK, INC.
3334 VICTOR CT.,
SANTA CLARA, CA 95054

SUBMITTALS/ REVISIONS

1	HEALTH/USD SUBMITTAL	04/01/2022
2	2ND BLD. SUBMITTAL	07/22/2022
3	3RD BLD. SUBMITTAL	08/30/2022
4	3RD USD. SUBMITTAL	09/01/2022
5	2ND HEALTH SUBMITTAL	09/29/2022

PROJECT NO:	21127
SCALE:	AS SHOWN
DATE:	2/10/2022
DRAWN BY:	TL / YC
CHECKED BY:	JP

SHEET TITLE
KEF DETAILS

SHEET NO.
M-4.2

BIMcloud: COAR CONFERENCE - BIMcloud Basic for ARCHICAD 25/202201-Fremont-Ghost Kitchen Thursday, February 10, 2022 1:47 PM

FANS #3 (KEF-K3), #10 (KEF-K10), #11 (KEF-K11), #12 (KEF-K12), #13 (KEF-K13), #14 (KEF-K14), #15 (KEF-K15), #16 (KEF-K16), #17 (KEF-K17), #18 (KEF-K18), #19 (KEF-K19), #20 (KEF-K20), #21 (KEF-K21), #22 (KEF-K22), #23 (KEF-K23) - DU180HFA EXHAUST FAN

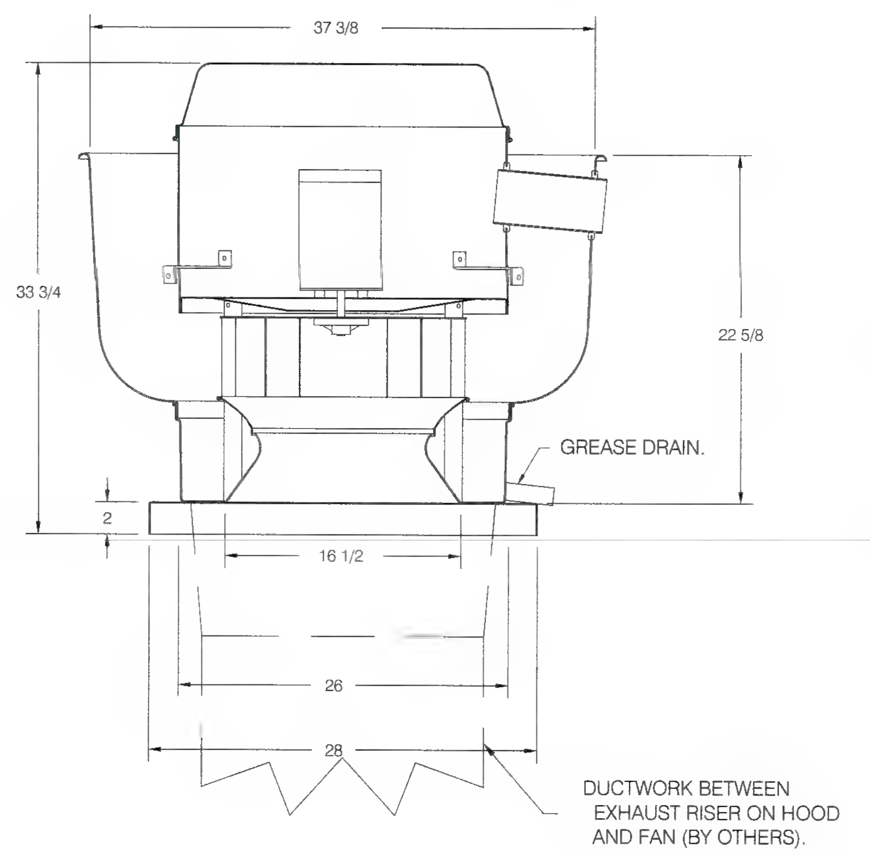

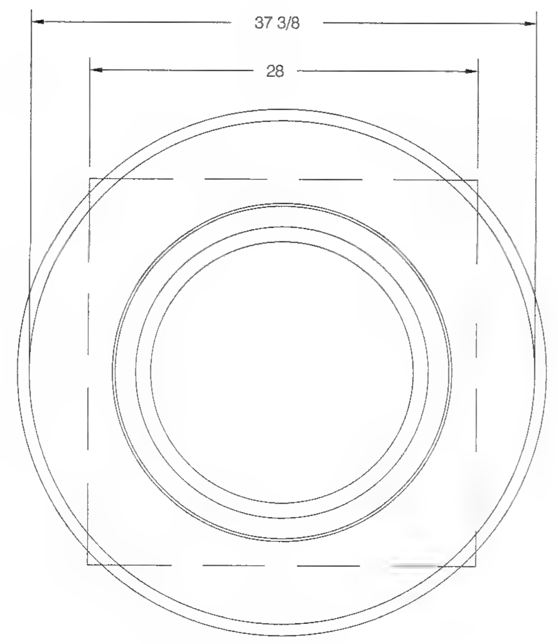

TOP VIEW

FEATURES:

- DIRECT DRIVE CONSTRUCTION (NO BELTS/PULLEYS).
- ROOF MOUNTED FANS.
- RESTAURANT MODEL.
- UL705 AND UL762 AND ULC-S645
- VARIABLE SPEED CONTROL.
- INTERNAL WIRING.
- THERMAL OVERLOAD PROTECTION (SINGLE PHASE).
- HIGH HEAT OPERATION 300°F (149°C).
- GREASE CLASSIFICATION TESTING.
- NEMA 3R SAFETY DISCONNECT SWITCH.

NORMAL TEMPERATURE TEST
EXHAUST FAN MUST OPERATE CONTINUOUSLY WHILE EXHAUSTING AIR AT 300°F (149°C) UNTIL ALL FAN PARTS HAVE REACHED THERMAL EQUILIBRIUM, AND WITHOUT ANY DETERIORATING EFFECTS TO THE FAN WHICH WOULD CAUSE UNSAFE OPERATION.

ABNORMAL FLARE-UP TEST
EXHAUST FAN MUST OPERATE CONTINUOUSLY WHILE EXHAUSTING BURNING GREASE VAPORS AT 600°F (316°C) FOR A PERIOD OF 15 MINUTES WITHOUT THE FAN BECOMING DAMAGED TO ANY EXTENT THAT COULD CAUSE AN UNSAFE CONDITION.

OPTIONS

GREASE BOX.
FAN BASE CERAMIC SEAL - INSTALLED AT PLANT - FOR GREASE DUCTS.
2 YEAR PARTS WARRANTY.

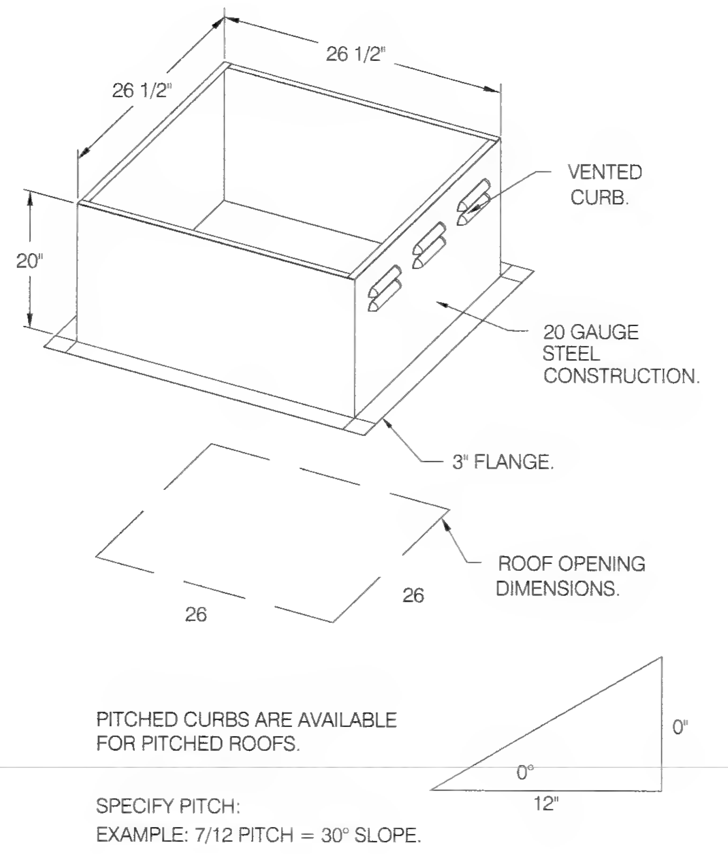

PITCHED CURBS ARE AVAILABLE FOR PITCHED ROOFS.

SPECIFY PITCH:
EXAMPLE: 7/12 PITCH = 30° SLOPE.

FAN #24 DU240HFA - EXHAUST FAN (KEF-K24)

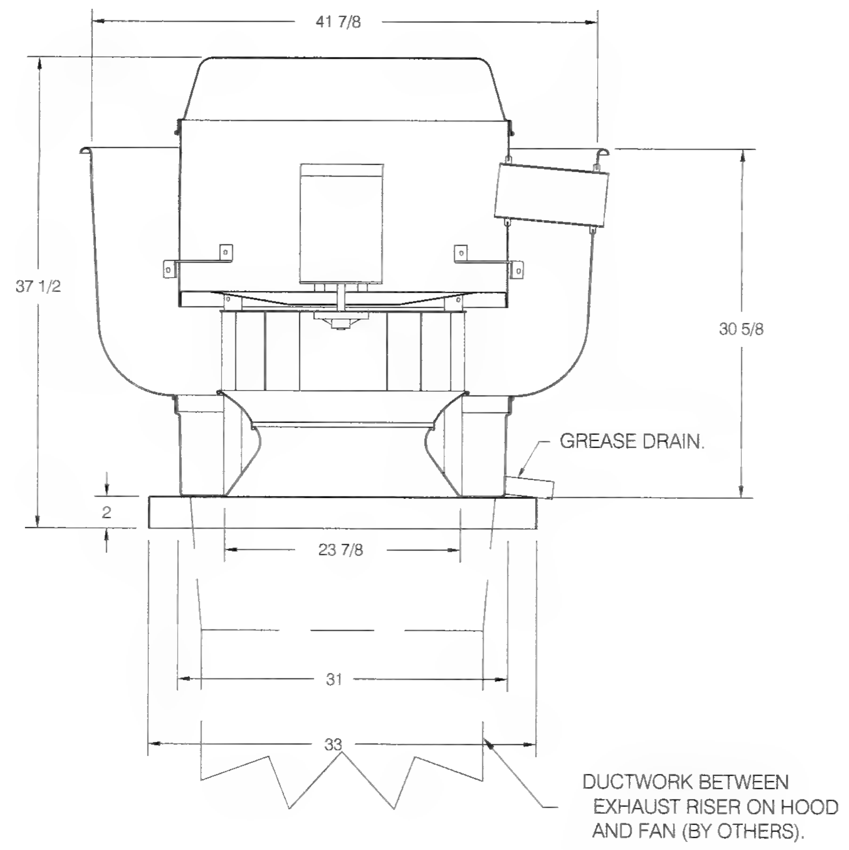

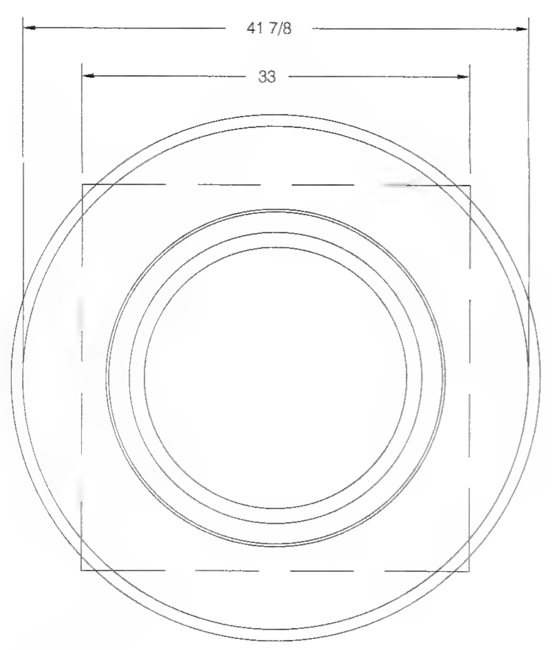

TOP VIEW

FEATURES:

- DIRECT DRIVE CONSTRUCTION (NO BELTS/PULLEYS).
- ROOF MOUNTED FANS.
- RESTAURANT MODEL.
- UL705 AND UL762 AND ULC-S645
- VARIABLE SPEED CONTROL.
- INTERNAL WIRING.
- THERMAL OVERLOAD PROTECTION (SINGLE PHASE).
- HIGH HEAT OPERATION 300°F (149°C).
- GREASE CLASSIFICATION TESTING.
- NEMA 3R SAFETY DISCONNECT SWITCH.

NORMAL TEMPERATURE TEST
EXHAUST FAN MUST OPERATE CONTINUOUSLY WHILE EXHAUSTING AIR AT 300°F (149°C) UNTIL ALL FAN PARTS HAVE REACHED THERMAL EQUILIBRIUM, AND WITHOUT ANY DETERIORATING EFFECTS TO THE FAN WHICH WOULD CAUSE UNSAFE OPERATION.

ABNORMAL FLARE-UP TEST
EXHAUST FAN MUST OPERATE CONTINUOUSLY WHILE EXHAUSTING BURNING GREASE VAPORS AT 600°F (316°C) FOR A PERIOD OF 15 MINUTES WITHOUT THE FAN BECOMING DAMAGED TO ANY EXTENT THAT COULD CAUSE AN UNSAFE CONDITION.

OPTIONS

GREASE BOX.
FAN BASE CERAMIC SEAL - INSTALLED AT PLANT - FOR GREASE DUCTS.
2 YEAR PARTS WARRANTY.

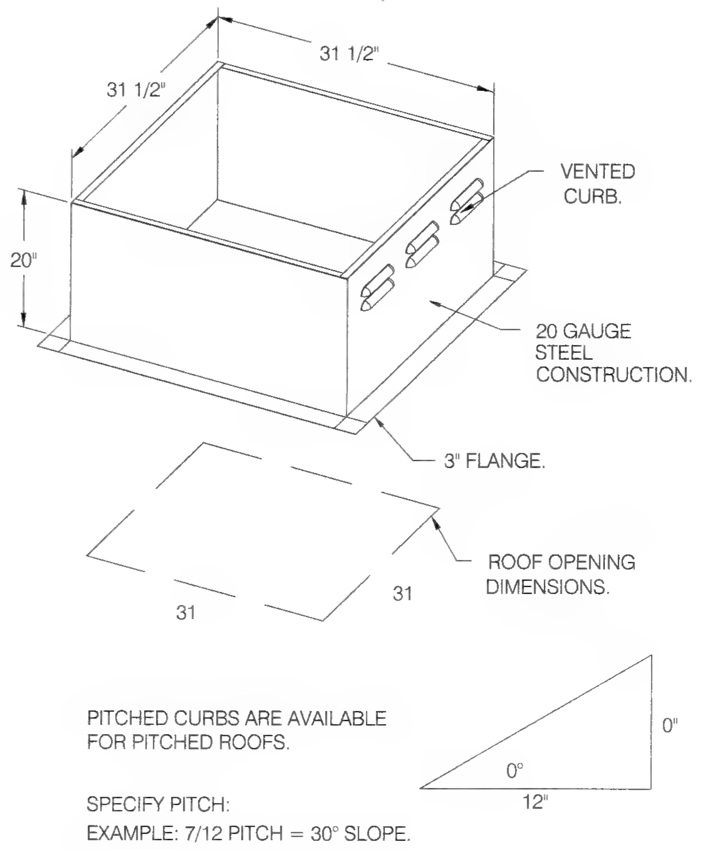

PITCHED CURBS ARE AVAILABLE FOR PITCHED ROOFS.

SPECIFY PITCH:
EXAMPLE: 7/12 PITCH = 30° SLOPE.

Alameda County
Dept. of Environmental Health
Approved By: T. Tran

REVISIONS

DESCRIPTION	DATE
△	
△	
△	
△	

CAPTIVEAIRE
Central CA
www.captiveaire.com
8 Adrian Court, Burlingame, CA, 94010 PHONE: (415) 956-2200 FAX: (919) 227-5940 EMAIL: reg91@econair.com

Saltalk Central Kitchen - Fremont, CA
42516 Albrae St,
Fremont, CA, 94538

DATE: 3/9/2022

DWG.#: 5254633

DRAWN BY: T.Thai

SCALE: 3/4" = 1'-0"

MASTER DRAWING

SHEET NO.
14

CO-AR DESIGN, INC.
680 Brea Canyon Rd., Ste. 178
Diamond Bar, CA 91789

Office: 909-598-0186
http:\\www.coardesign.com

Dennis J. Lee, Architect
dennisl@coardesign.com

THESE DRAWINGS ARE THE PROPERTY OF THE ARCHITECT. THE DESIGNS SHOWN AND DESCRIBED HERIN INCLUDING ALL TECHNICAL DRAWINGS ARE PROPRIETARY AND CANNOT BE COPIED, DUPLICATED OR COMMERCIALLY EXPLOITED, IN WHOLE OR IN PART. THE DRAWINGS AND SPECIFICATIONS SHALL NOT BE USED BY THE OWNER ON OTHER PROJECTS, FOR ADDITIONS TO THIS PROJECT, OR FOR COMPLETION OF THIS PROJECT BY OTHERS. THE OWNER AGREES TO HOLD HARMLESS, INDEMNIFY AND DEFEND THE ARCHITECT AGAINST ALL DAMAGES, CLAIMS AND LOSSES, INCLUDING DEFENSE COSTS, ARISING OUT OF ANY REUSE OF THE PLANS AND SPECIFICATIONS WITHOUT THE WRITTEN AUTHORIZATION OF THE ARCHITECT OF RECORD.

COPYRIGHT © 2022 CO-AR DESIGN, INC., ALL RIGHTS RESERVED.

SEAL:

REGISTERED PROFESSIONAL ENGINEER
JIA HUI PAN
M35374
EXP. 6/30/23
MECHANICAL
STATE OF CALIFORNIA

NOTES:

JHP Engineering and Design Services Inc.
3103 Independence Drive
Livermore, CA 94551
TEL: 925-409-2508
CEL: 510-468-0613
FAX: 510-788-6039

PROJECT:
SALTALK FREMONT KITCHEN TENANT IMPROVEMENT

42550 ALBRAE ST.,
FREMONT, CA 94538

CLIENT:

SALTALK, INC.
3334 VICTOR CT.,
SANTA CLARA, CA 95054

SUBMITTALS/ REVISIONS

1	HEALTH/USD SUBMITTAL	04/01/2022
2	2ND BLD. SUBMITTAL	07/22/2022
3	3RD BLD. SUBMITTAL	08/30/2022
4	3RD USD. SUBMITTAL	09/01/2022
5	2ND HEALTH SUBMITTAL	09/29/2022

PROJECT NO	21127
SCALE:	AS SHOWN
DATE:	2/10/2022
DRAWN BY	TL / YC
CHECKED BY	JP

SHEET TITLE
KEF DETAILS

SHEET NO
M-4.3

BIMcloud: COAR CONFERENCE - BIMcloud Basic for ARCHICAD 25/202201-Fremont-Ghost Kitchen Thursday, February 10, 2022 1:47 PM

FAN #29 A2-20D - SUPPLY FAN (MAU-K1)
FANS #30 (MAU-K2), #31 (MAU-K3), #32 (MAU-K4), #33 (MAU-K5), #34 (MAU-K6), #35 (MAU-K7), #36 (MAU-K8), #37 (MAU-K9), #40 (MAU-K12), #41 (MAU-K13), #42 (MAU-K14), #43 (MAU-K15), #44 (MAU-K16), #45 (MAU-K17), #49 (MAU-K21), #50 (MAU-K22), #51 (MAU-K23), #53 (MAU-K25), #54 (MAU-K26) - A2-20D SUPPLY FAN
FAN #52 A2-20D - SUPPLY FAN (MAU-K24)

1. UNTEMPERED SUPPLY UNIT WITH 20" MIXED FLOW DIRECT DRIVE FAN IN SIZE #2 HOUSING.
2. EVAP COOLER (CELDEK) W/INTAKE HOOD W/EZ FILTERS-LOW CFM.
3. DOWN DISCHARGE - AIR FLOW RIGHT -> LEFT.
4. DOWN DISCHARGE CONSTRUCTION FOR SIZE 2 UNTEMPERED DIRECT DRIVE AHUS.
5. 120V WIRING CONNECTION TO ENERGIZE EVAPORATIVE COOLERS FROM UNTEMPERED SUPPLY FANS.
6. SEPARATE 120VAC WIRING PACKAGE FOR MAKE-UP AIR UNITS. OPTION MUST BE SELECTED WHEN MOUNTING VFD IN PREWIRE PANEL OR WITH DCV PACKAGE. PROVIDES SEPARATE 120VAC INPUT TO SUPPLY FAN. THIS 120V SIGNAL MUST BE RUN BY ELECTRICIAN FROM DCV TO MUA SWITCH.
7. HINGED DOUBLE WALL INSULATED DOOR ASSEMBLY (BURNER/BLOWER/EVAP SECTION).
8. 2 YEAR PARTS WARRANTY

*NOTE: SUPPLY DUCT MUST BE INSTALLED TO MEET SMACNA STANDARDS. A MINIMUM STRAIGHT DUCT LENGTH MUST BE MAINTAINED DOWNSTREAM OF UNIT DISCHARGE AS OUTLINED IN AMCA PUBLICATION 201. WHEN USING RECTANGULAR DUCTWORK, ELBOWS MUST BE RADIUS THROAT, RADIUS BACK WITH TURNING VANES. FLEXIBLE DUCTWORK AND SQUARE THROAT/SQUARE BACK ELBOWS SHOULD NOT BE USED. ANY TRANSITION AND/OR TURNS IN THE DUCTWORK WILL CAUSE SYSTEM EFFECT. SYSTEM EFFECT WILL DRASTICALLY INCREASE STATIC PRESSURE AND REDUCE AIRFLOW. DO NOT RELY ON UNIT TO SUPPORT DUCT IN ANY WAY. FAILURE TO PROPERLY SIZE DUCTWORK MAY CAUSE SYSTEM EFFECTS AND REDUCE PERFORMANCE OF THE EQUIPMENT.
SUGGESTED STRAIGHT DUCT SIZE IS 20" x 20".

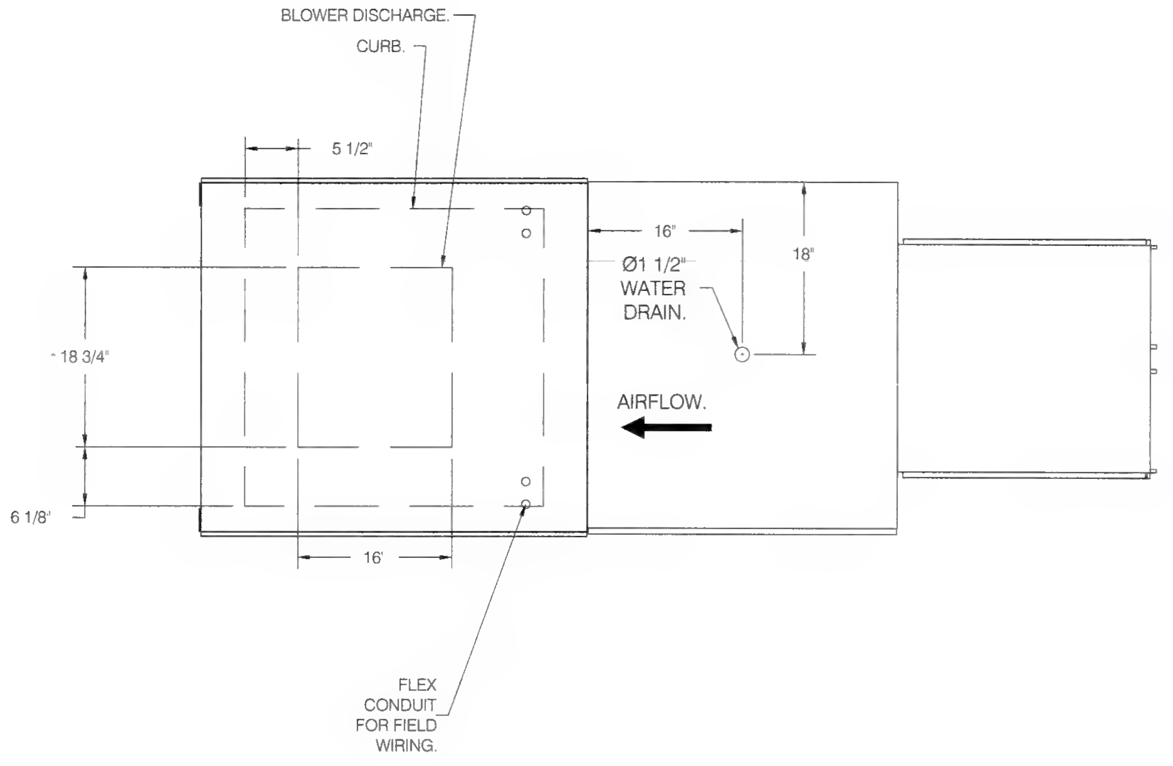

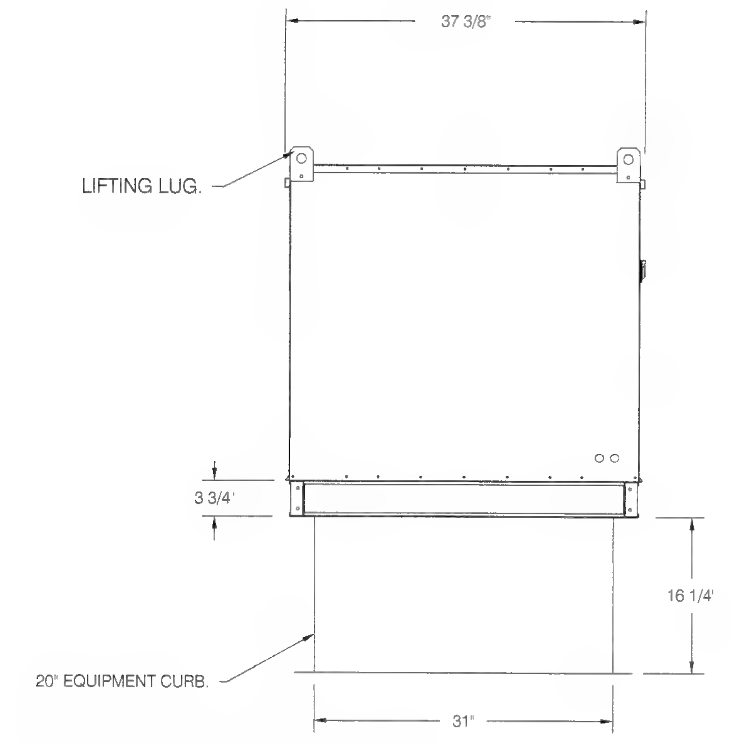

ROOF OPENING 2" SMALLER THAN CURB DIMENSION.

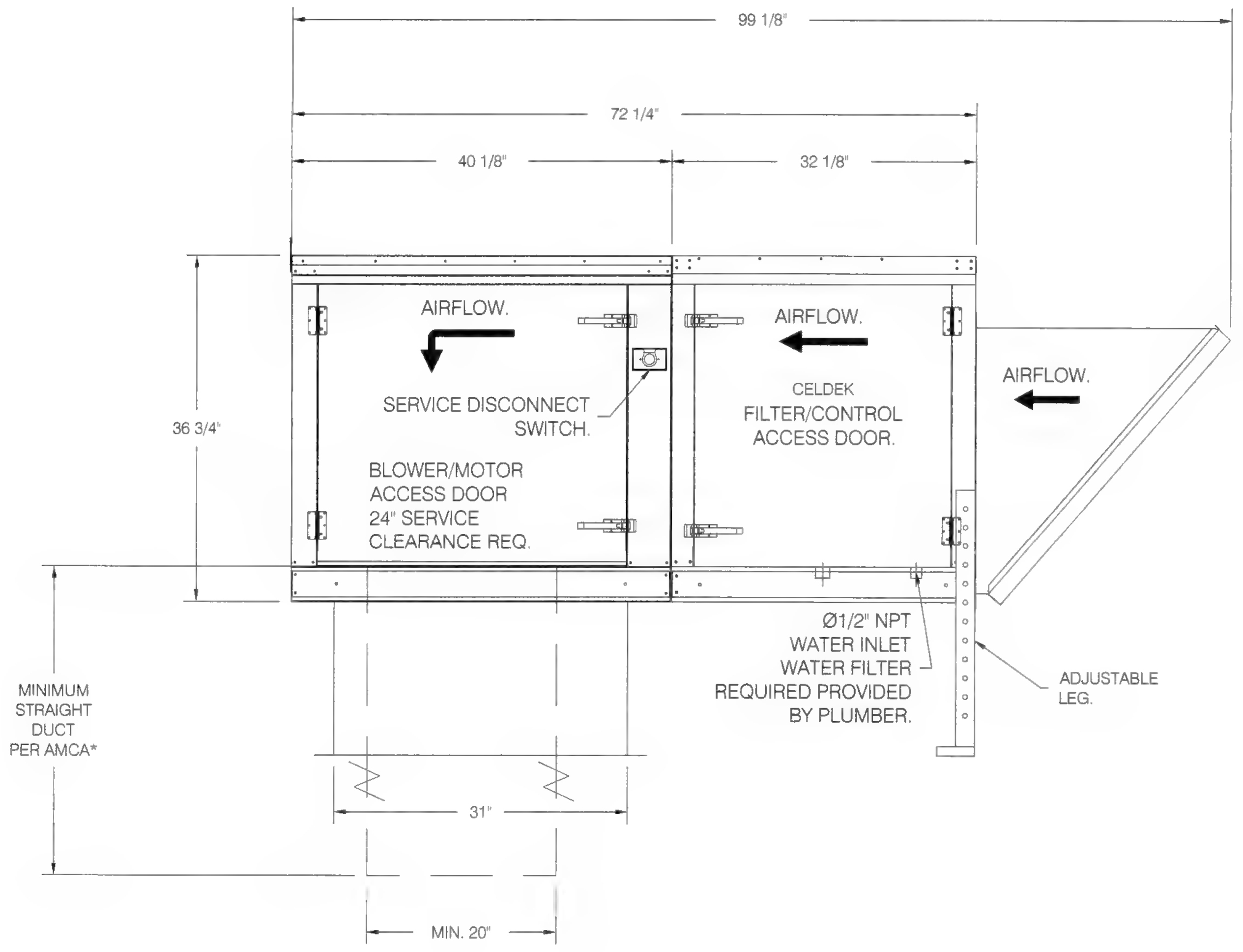

Alameda County
Dept. of Environmental Health
Approved By: T. Tran

REVISIONS

DESCRIPTION	DATE
△	
△	
△	
△	

CAPTIVEAIRE
www.captiveaire.com
Central CA
8 Adrian Court, Burlingame, CA, 94010 PHONE: (415) 956-2200 FAX: (919) 227-5940 EMAIL: reg91@econair.com

Saltalk Central Kitchen - Fremont, CA
42516 Albrae St,
Fremont, CA, 94538

DATE: 3/9/2022

DWG.#: 5254633

DRAWN BY: T.Thai

SCALE: 3/4" = 1'-0"

MASTER DRAWING

SHEET NO. 15

CO-AR DESIGN, INC.
680 Brea Canyon Rd., Ste. 178
Diamond Bar, CA 91789

Office: 909-598-0186
http:\\www.coardesign.com

Dennis J. Lee, Architect
dennisl@coardesign.com

THESE DRAWINGS ARE THE PROPERTY OF THE ARCHITECT. THE DESIGNS SHOWN AND DESCRIBED HERIN INCLUDING ALL TECHNICAL DRAWINGS ARE PROPRIETARY AND CANNOT BE COPIED, DUPLICATED OR COMMERCIALLY EXPLOITED, IN WHOLE OR IN PART. THE DRAWINGS AND SPECIFICATIONS SHALL NOT BE USED BY THE OWNER ON OTHER PROJECTS, FOR ADDITIONS TO THIS PROJECT, OR FOR COMPLETION OF THIS PROJECT BY OTHERS. THE OWNER AGREES TO HOLD HARMLESS, INDEMNIFY AND DEFEND THE ARCHITECT AGAINST ALL DAMAGES, CLAIMS AND LOSSES, INCLUDING DEFENSE COSTS, ARISING OUT OF ANY REUSE OF THE PLANS AND SPECIFICATIONS WITHOUT THE WRITTEN AUTHORIZATION OF THE ARCHITECT OF RECORD.

COPYRIGHT © 2022 CO-AR DESIGN, INC., ALL RIGHTS RESERVED.

SEAL

REGISTERED PROFESSIONAL ENGINEER
JIA HUI PAN
M35374
EXP. 6/30/23
MECHANICAL
STATE OF CALIFORNIA

NOTES

JHP Engineering and Design Services Inc.
3103 Independence Drive
Livermore, CA 94551
TEL: 925-409-2508
CEL: 510-468-0613
FAX: 510-788-6039

PROJECT
SALTALK FREMONT KITCHEN TENANT IMPROVEMENT

42550 ALBRAE ST.,
FREMONT, CA 94538

CLIENT
SALTALK, INC.
3334 VICTOR CT.,
SANTA CLARA, CA 95054

SUBMITTALS/ REVISIONS

1	HEALTH/USD SUBMITTAL	04/01/2022
2	2ND BLD. SUBMITTAL	07/22/2022
3	3RD BLD. SUBMITTAL	08/30/2022
4	3RD USD. SUBMITTAL	09/01/2022
5	2ND HEALTH SUBMITTAL	09/29/2022

PROJECT NO	21127
SCALE	AS SHOWN
DATE	2/10/2022
DRAWN BY	TL / YC
CHECKED BY	JP

SHEET TITLE
MAU DETAILS

SHEET NO
M-4.4

BIMcloud: COAR-CONFERENCE - BIMcloud Basic for ARCHICAD 25/20201-Fremont-Ghost Kitchen Thursday, February 10, 2022 1:47 PM

FANS #38 (MAU-K10), #39 (MAU-K11), #46 (MAU-K18), #47 (MAU-K19), #48 (MAU-K20), #55 (MAU-K27) - A2-20D SUPPLY FAN
FAN #56 A2-20D - SUPPLY FAN (MAU-K28)

1. UNTEMPERED SUPPLY UNIT WITH 20' MIXED FLOW DIRECT DRIVE FAN IN SIZE #2 HOUSING.
2. EVAP COOLER (CELDEK) W/INTAKE HOOD W/EZ FILTERS-LOW CFM.
3. SIDE DISCHARGE - AIR FLOW RIGHT -> LEFT.
4. 120V WIRING CONNECTION TO ENERGIZE EVAPORATIVE COOLERS FROM UNTEMPERED SUPPLY FANS
5. SEPARATE 120VAC WIRING PACKAGE FOR MAKE-UP AIR UNITS. OPTION MUST BE SELECTED WHEN MOUNTING VFD IN PREWIRE PANEL OR WITH DCV PACKAGE. PROVIDES SEPARATE 120VAC INPUT TO SUPPLY FAN. THIS 120V SIGNAL MUST BE RUN BY ELECTRICIAN FROM DCV TO MUA SWITCH.
6. HINGED DOUBLE WALL INSULATED DOOR ASSEMBLY (BURNER/BLOWER/EVAP SECTION).
7. 2 YEAR PARTS WARRANTY

*NOTE: SUPPLY DUCT MUST BE INSTALLED TO MEET SMACNA STANDARDS. A MINIMUM STRAIGHT DUCT LENGTH MUST BE MAINTAINED DOWNSTREAM OF UNIT DISCHARGE AS OUTLINED IN AMCA PUBLICATION 201. WHEN USING RECTANGULAR DUCTWORK, ELBOWS MUST BE RADIUS THROAT, RADIUS BACK WITH TURNING VANES. FLEXIBLE DUCTWORK AND SQUARE THROAT/SQUARE BACK ELBOWS SHOULD NOT BE USED. ANY TRANSITION AND/OR TURNS IN THE DUCTWORK WILL CAUSE SYSTEM EFFECT. SYSTEM EFFECT WILL DRASTICALLY INCREASE STATIC PRESSURE AND REDUCE AIRFLOW. DO NOT RELY ON UNIT TO SUPPORT DUCT IN ANY WAY. FAILURE TO PROPERLY SIZE DUCTWORK MAY CAUSE SYSTEM EFFECTS AND REDUCE PERFORMANCE OF THE EQUIPMENT.
SUGGESTED STRAIGHT DUCT SIZE IS 26' x 26'.

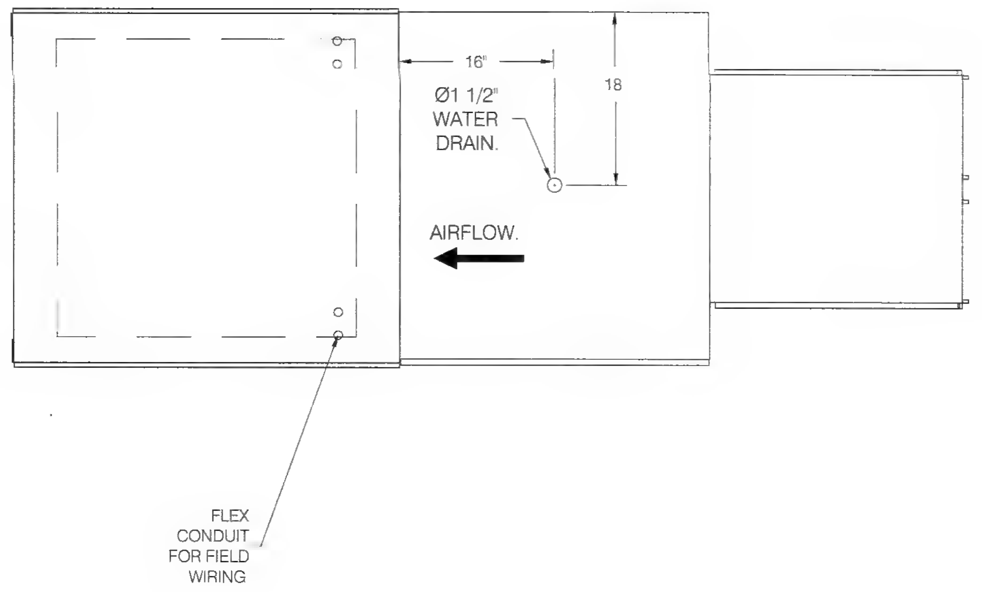

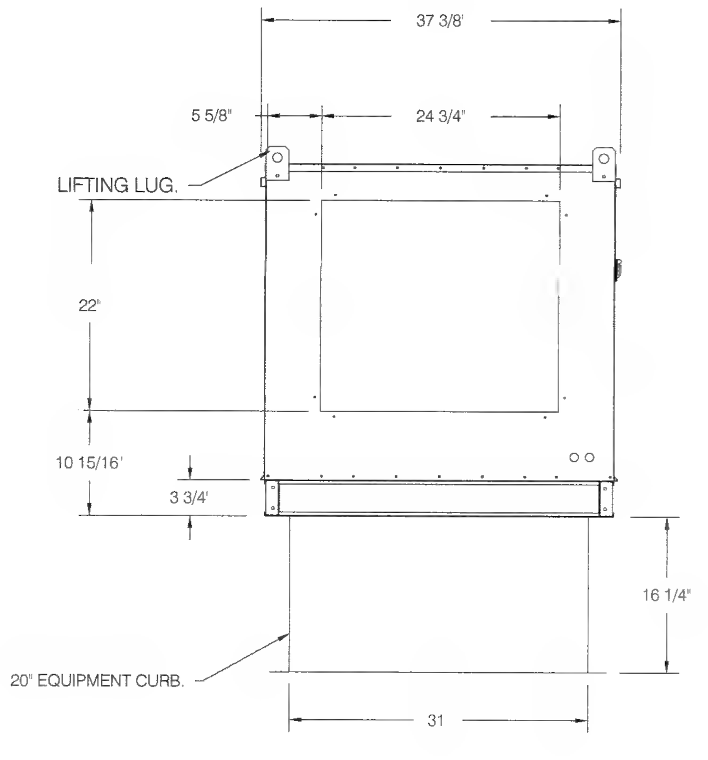

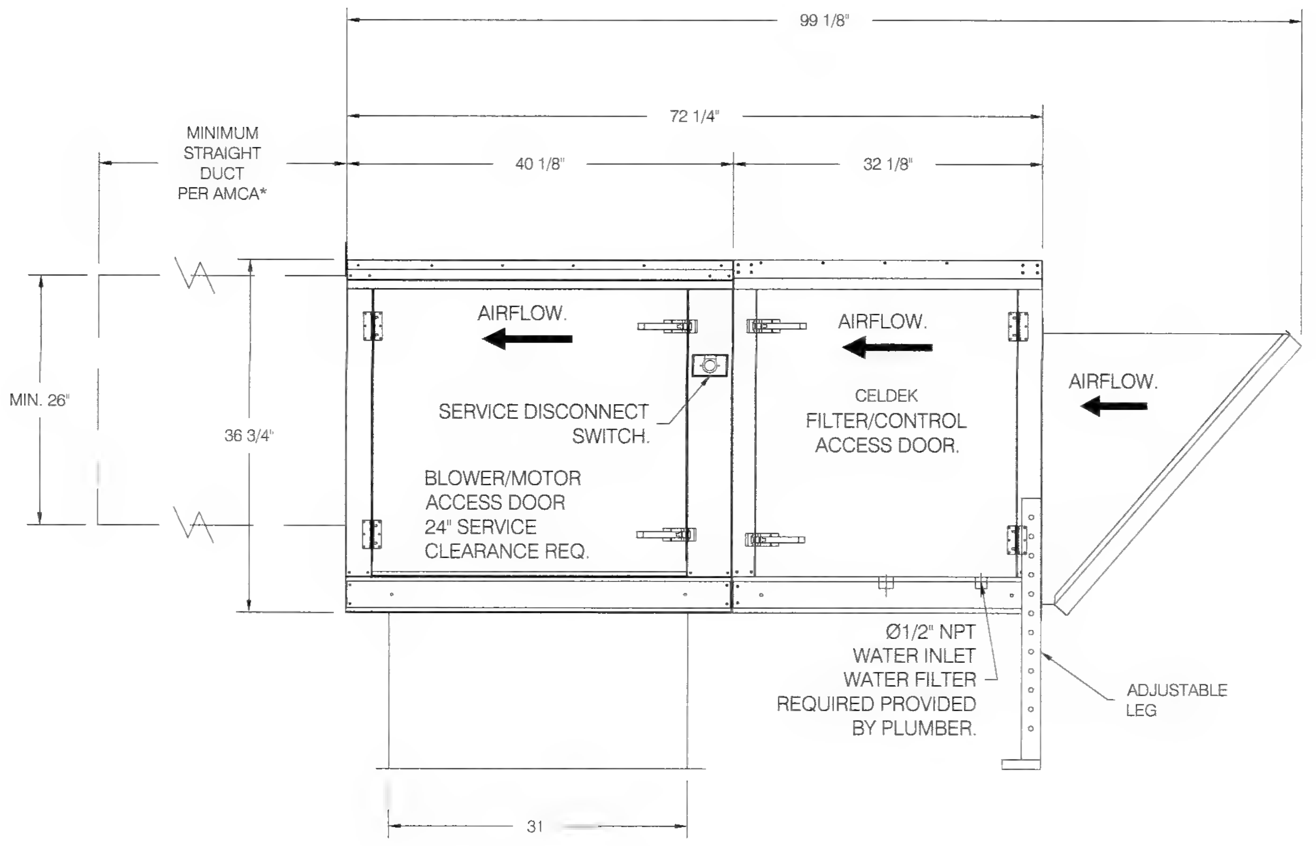

Alameda County
Dept. of Environmental Health
Approved By: T. Tran

REVISIONS

DESCRIPTION	DATE
△	
△	
△	
△	

CAPTIVEAIRE
www.captiveaire.com
Central CA
8 Adrian Court, Burlingame, CA, 94010 PHONE: (415) 956-2200 FAX: (919) 227-5940 EMAIL: reg91@econair.com

Saltalk Central Kitchen - Fremont, CA
42516 Albrae St,
Fremont, CA, 94538

DATE: 3/9/2022

DWG.#: 5254633

DRAWN BY: T.Thai

SCALE: 3/4" = 1'-0"

MASTER DRAWING

SHEET NO. 16

CO-AR DESIGN, INC.
680 Brea Canyon Rd., Ste. 178
Diamond Bar, CA 91789

Office: 909-598-0186
http:\\www.coardesign.com

Dennis J. Lee, Architect
dennisl@coardesign.com

THESE DRAWINGS ARE THE PROPERTY OF THE ARCHITECT. THE DESIGNS SHOWN AND DESCRIBED HERIN INCLUDING ALL TECHNICAL DRAWINGS ARE PROPRIETARY AND CANNOT BE COPIED, DUPLICATED OR COMMERCIALLY EXPLOITED, IN WHOLE OR IN PART. THE DRAWINGS AND SPECIFICATIONS SHALL NOT BE USED BY THE OWNER ON OTHER PROJECTS, FOR ADDITIONS TO THIS PROJECT, OR FOR COMPLETION OF THIS PROJECT BY OTHERS. THE OWNER AGREES TO HOLD HARMLESS INDEMNIFY AND DEFEND THE ARCHITECT AGAINST ALL DAMAGES, CLAIMS AND LOSSES, INCLUDING DEFENSE COSTS, ARISING OUT OF ANY REUSE OF THE PLANS AND SPECIFICATIONS WITHOUT THE WRITTEN AUTHORIZATION OF THE ARCHITECT OF RECORD

COPYRIGHT © 2022 CO-AR DESIGN, INC., ALL RIGHTS RESERVED.

SEAL

REGISTERED PROFESSIONAL ENGINEER
JIA HUI PAN
M35374
EXP. 6/30/23
MECHANICAL
STATE OF CALIFORNIA

NOTES

JHP Engineering and Design Services Inc.
3103 Independence Drive
Livermore, CA 94551
TEL: 925-409-2508
CEL: 510-468-0613
FAX: 510-788-6039

PROJECT
SALTALK FREMONT KITCHEN TENANT IMPROVEMENT

42550 ALBRAE ST.,
FREMONT, CA 94538

CLIENT

SALTALK, INC.
3334 VICTOR CT.,
SANTA CLARA, CA 95054

SUBMITTALS/ REVISIONS

1	HEALTH/USD SUBMITTAL	04/01/2022
2	2ND BLD. SUBMITTAL	07/22/2022
3	3RD BLD. SUBMITTAL	08/30/2022
4	3RD USD. SUBMITTAL	09/01/2022
5	2ND HEALTH SUBMITTAL	09/29/2022

PROJECT NO	21127
SCALE	AS SHOWN
DATE	2/10/2022
DRAWN BY:	TL / YC
CHECKED BY	JP

SHEET TITLE
MAU DETAILS

SHEET NO
M-4.5

BIMcloud: COAR CONFERENCE - BIMcloud Basic for ARCHICAD 25/202201-Fremont-Ghost Kitchen Thursday, February 10, 2022 1:47 PM

ELECTRICAL PACKAGE – JOB#5254633

NO	TAG	PACKAGE #	LOCATION	SWITCHES		OPTION	FANS CONTROLLED					
				LOCATION	QUANTITY		FAN TAG	TYPE	Φ	HP	VOLT	FLA
1	K1	SC-311110MA	UTILITY CABINET LEFT	03 - UTILITY CABINET LEFT	1 LIGHT	SMART CONTROLS THERMOSTATIC CONTROL W/ RELAY ON/OFF WITH SUPPLY	KEF-K1	EXHAUST	3	3.000	208	9.5
				HOOD # 1	1 FAN		MAU-K1	SUPPLY	3	2.000	208	8.3
2	K2	SC-311110MA	UTILITY CABINET RIGHT	04 - UTILITY CABINET RIGHT	1 LIGHT	SMART CONTROLS THERMOSTATIC CONTROL W/ RELAY ON/OFF WITH SUPPLY	KEF-K2	EXHAUST	3	3.000	208	9.5
				HOOD # 2	1 FAN		MAU-K2	SUPPLY	3	2.000	208	8.3
3	K3	SC-311110MA	UTILITY CABINET LEFT	03 - UTILITY CABINET LEFT	1 LIGHT	SMART CONTROLS THERMOSTATIC CONTROL W/ RELAY ON/OFF WITH SUPPLY	KEF-K3	EXHAUST	3	3.000	208	9.5
				HOOD # 3	1 FAN		MAU-K3	SUPPLY	3	2.000	208	8.3
4	K4	SC-311110MA	UTILITY CABINET RIGHT	04 - UTILITY CABINET RIGHT	1 LIGHT	SMART CONTROLS THERMOSTATIC CONTROL W/ RELAY ON/OFF WITH SUPPLY	KEF-K4	EXHAUST	3	3.000	208	9.5
				HOOD # 4	1 FAN		MAU-K4	SUPPLY	3	2.000	208	8.3
5	K5	SC-311110MA	UTILITY CABINET LEFT	03 - UTILITY CABINET LEFT	1 LIGHT	SMART CONTROLS THERMOSTATIC CONTROL W/ RELAY ON/OFF WITH SUPPLY	KEF-K5	EXHAUST	3	3.000	208	9.5
				HOOD # 5	1 FAN		MAU-K5	SUPPLY	3	2.000	208	8.3
6	K6	SC-311110MA	UTILITY CABINET RIGHT	04 - UTILITY CABINET RIGHT	1 LIGHT	SMART CONTROLS THERMOSTATIC CONTROL W/ RELAY ON/OFF WITH SUPPLY	KEF-K6	EXHAUST	3	3.000	208	9.5
				HOOD # 6	1 FAN		MAU-K6	SUPPLY	3	2.000	208	8.3
7	K7	SC-311110MA	UTILITY CABINET LEFT	03 - UTILITY CABINET LEFT	1 LIGHT	SMART CONTROLS THERMOSTATIC CONTROL W/ RELAY ON/OFF WITH SUPPLY	KEF-K7	EXHAUST	3	3.000	208	9.5
				HOOD # 7	1 FAN		MAU-K7	SUPPLY	3	2.000	208	8.3
8	K8	SC-311110MA	UTILITY CABINET RIGHT	04 - UTILITY CABINET RIGHT	1 LIGHT	SMART CONTROLS THERMOSTATIC CONTROL W/ RELAY ON/OFF WITH SUPPLY	KEF-K8	EXHAUST	3	3.000	208	9.5
				HOOD # 8	1 FAN		MAU-K8	SUPPLY	3	2.000	208	8.3
9	K9	SC-311110MA	UTILITY CABINET LEFT	03 - UTILITY CABINET LEFT	1 LIGHT	SMART CONTROLS THERMOSTATIC CONTROL W/ RELAY ON/OFF WITH SUPPLY	KEF-K9	EXHAUST	3	3.000	208	9.5
				HOOD # 9	1 FAN		MAU-K9	SUPPLY	3	2.000	208	8.3
10	K10	SC-311110MA	UTILITY CABINET RIGHT	04 - UTILITY CABINET RIGHT	1 LIGHT	SMART CONTROLS THERMOSTATIC CONTROL W/ RELAY ON/OFF WITH SUPPLY	KEF-K10	EXHAUST	3	3.000	208	9.5
				HOOD # 10	1 FAN		MAU-K10	SUPPLY	3	2.000	208	8.3
11	K11	SC-311110MA	UTILITY CABINET LEFT	03 - UTILITY CABINET LEFT	1 LIGHT	SMART CONTROLS THERMOSTATIC CONTROL W/ RELAY ON/OFF WITH SUPPLY	KEF-K11	EXHAUST	3	3.000	208	9.5
				HOOD # 11	1 FAN		MAU-K11	SUPPLY	3	2.000	208	8.3
12	K12	SC-311110MA	UTILITY CABINET RIGHT	04 - UTILITY CABINET RIGHT	1 LIGHT	SMART CONTROLS THERMOSTATIC CONTROL W/ RELAY ON/OFF WITH SUPPLY	KEF-K12	EXHAUST	3	3.000	208	9.5
				HOOD # 12	1 FAN		MAU-K12	SUPPLY	3	2.000	208	8.3
13	K13	SC-311110MA	UTILITY CABINET LEFT	03 - UTILITY CABINET LEFT	1 LIGHT	SMART CONTROLS THERMOSTATIC CONTROL W/ RELAY ON/OFF WITH SUPPLY	KEF-K13	EXHAUST	3	3.000	208	9.5
				HOOD # 13	1 FAN		MAU-K13	SUPPLY	3	2.000	208	8.3
14	K14	SC-311110MA	UTILITY CABINET RIGHT	04 - UTILITY CABINET RIGHT	1 LIGHT	SMART CONTROLS THERMOSTATIC CONTROL W/ RELAY ON/OFF WITH SUPPLY	KEF-K14	EXHAUST	3	3.000	208	9.5
				HOOD # 14	1 FAN		MAU-K14	SUPPLY	3	2.000	208	8.3
15	K15	SC-311110MA	UTILITY CABINET LEFT	03 - UTILITY CABINET LEFT	1 LIGHT	SMART CONTROLS THERMOSTATIC CONTROL W/ RELAY ON/OFF WITH SUPPLY	KEF-K15	EXHAUST	3	3.000	208	9.5
				HOOD # 15	1 FAN		MAU-K15	SUPPLY	3	2.000	208	8.3
16	K16	SC-311110MA	UTILITY CABINET RIGHT	04 - UTILITY CABINET RIGHT	1 LIGHT	SMART CONTROLS THERMOSTATIC CONTROL W/ RELAY ON/OFF WITH SUPPLY	KEF-K16	EXHAUST	3	3.000	208	9.5
				HOOD # 16	1 FAN		MAU-K16	SUPPLY	3	2.000	208	8.3
17	K17	SC-311110MA	UTILITY CABINET LEFT	03 - UTILITY CABINET LEFT	1 LIGHT	SMART CONTROLS THERMOSTATIC CONTROL W/ RELAY ON/OFF WITH SUPPLY	KEF-K17	EXHAUST	3	3.000	208	9.5
				HOOD # 17	1 FAN		MAU-K17	SUPPLY	3	2.000	208	8.3
18	K18	SC-311110MA	UTILITY CABINET RIGHT	04 - UTILITY CABINET RIGHT	1 LIGHT	SMART CONTROLS THERMOSTATIC CONTROL W/ RELAY ON/OFF WITH SUPPLY	KEF-K18	EXHAUST	3	3.000	208	9.5
				HOOD # 18	1 FAN		MAU-K18	SUPPLY	3	2.000	208	8.3
19	K19	SC-311110MA	UTILITY CABINET LEFT	03 - UTILITY CABINET LEFT	1 LIGHT	SMART CONTROLS THERMOSTATIC CONTROL W/ RELAY ON/OFF WITH SUPPLY	KEF-K19	EXHAUST	3	3.000	208	9.5
				HOOD # 19	1 FAN		MAU-K19	SUPPLY	3	2.000	208	8.3
20	K20	SC-311110MA	UTILITY CABINET RIGHT	04 - UTILITY CABINET RIGHT	1 LIGHT	SMART CONTROLS THERMOSTATIC CONTROL W/ RELAY ON/OFF WITH SUPPLY	KEF-K20	EXHAUST	3	3.000	208	9.5
				HOOD # 20	1 FAN		MAU-K20	SUPPLY	3	2.000	208	8.3
21	K21	SC-311110MA	UTILITY CABINET RIGHT	04 - UTILITY CABINET RIGHT	1 LIGHT	SMART CONTROLS THERMOSTATIC CONTROL W/ RELAY ON/OFF WITH SUPPLY	KEF-K21	EXHAUST	3	3.000	208	9.5
				HOOD # 21	1 FAN		MAU-K21	SUPPLY	3	2.000	208	8.3
22	K22	SC-311110MA	UTILITY CABINET LEFT	03 - UTILITY CABINET LEFT	1 LIGHT	SMART CONTROLS THERMOSTATIC CONTROL W/ RELAY ON/OFF WITH SUPPLY	KEF-K22	EXHAUST	3	3.000	208	9.5
				HOOD # 22	1 FAN		MAU-K22	SUPPLY	3	2.000	208	8.3
23	K23	SC-311110MA	UTILITY CABINET RIGHT	04 - UTILITY CABINET RIGHT	1 LIGHT	SMART CONTROLS THERMOSTATIC CONTROL W/ RELAY ON/OFF WITH SUPPLY	KEF-K23	EXHAUST	3	3.000	208	9.5
				HOOD # 23	1 FAN		MAU-K23	SUPPLY	3	2.000	208	8.3
24	K24	SC-311110MA	UTILITY CABINET LEFT	03 - UTILITY CABINET LEFT	1 LIGHT	SMART CONTROLS THERMOSTATIC CONTROL W/ RELAY ON/OFF WITH SUPPLY	KEF-K24	EXHAUST	3	3.000	208	10.2
				HOOD # 24	1 FAN		MAU-K24	SUPPLY	3	3.000	208	9.5
25	K25	SC-311110MA	UTILITY CABINET LEFT	03 - UTILITY CABINET LEFT	1 LIGHT	SMART CONTROLS THERMOSTATIC CONTROL W/ RELAY ON/OFF WITH SUPPLY	KEF-K25	EXHAUST	3	3.000	208	9.5
				HOOD # 25	1 FAN		MAU-K25	SUPPLY	3	2.000	208	8.3
26	K26	SC-311110MA	UTILITY CABINET RIGHT	04 - UTILITY CABINET RIGHT	1 LIGHT	SMART CONTROLS THERMOSTATIC CONTROL W/ RELAY ON/OFF WITH SUPPLY	KEF-K26	EXHAUST	3	3.000	208	9.5
				HOOD # 26	1 FAN		MAU-K26	SUPPLY	3	2.000	208	8.3
27	K27	SC-311110MA	UTILITY CABINET LEFT	03 - UTILITY CABINET LEFT	1 LIGHT	SMART CONTROLS THERMOSTATIC CONTROL W/ RELAY ON/OFF WITH SUPPLY	KEF-K27	EXHAUST	3	3.000	208	9.5
				HOOD # 27	1 FAN		MAU-K27	SUPPLY	3	2.000	208	8.3
28	K28	SC-311110MA	WALL MOUNT IN SS BOX	05 - SS WALL MOUNT BOX	1 LIGHT	SMART CONTROLS THERMOSTATIC CONTROL W/ RELAY ON/OFF WITH SUPPLY	KEF-K28	EXHAUST	3	3.000	208	9.5
					1 FAN		MAU-K28	SUPPLY	3	3.000	208	9.5

Alameda County
Dept. of Environmental Health
Approved By: T. Tran

REVISIONS

	DESCRIPTION	DATE:
△		
△		
△		
△		

econ·air
www.econair.com
Central CA
8 Adrian Court, Burlingame, CA, 94010 PHONE: (415) 956-2200 FAX: (919) 227-5940 EMAIL: reg91@econair.com

Saltalk Central Kitchen - Fremont, CA
42516 Albrae St,
Fremont, CA, 94538

DATE: 3/9/2022

DWG.#: 5254633

DRAWN BY: T.Thai

SCALE: 3/4" = 1'-0"

MASTER DRAWING

SHEET NO. 17

CO AR

CO-AR DESIGN, INC.
680 Brea Canyon Rd., Ste. 178
Diamond Bar, CA 91789

Office: 909-598-0186
http:\\www.coardesign.com

Dennis J. Lee, Architect
dennisl@coardesign.com

THESE DRAWINGS ARE THE PROPERTY OF THE ARCHITECT. THE DESIGNS SHOWN AND DESCRIBED HERIN INCLUDING ALL TECHNICAL DRAWINGS ARE PROPRIETARY AND CANNOT BE COPIED, DUPLICATED OR COMMERCIALLY EXPLOITED, IN WHOLE OR IN PART. THE DRAWINGS AND SPECIFICATIONS SHALL NOT BE USED BY THE OWNER ON OTHER PROJECTS, FOR ADDITIONS TO THIS PROJECT, OR FOR COMPLETION OF THIS PROJECT BY OTHERS. THE OWNER AGREES TO HOLD HARMLESS, INDEMNIFY AND DEFEND THE ARCHITECT AGAINST ALL DAMAGES, CLAIMS AND LOSSES, INCLUDING DEFENSE COSTS, ARISING OUT OF ANY REUSE OF THE PLANS AND SPECIFICATIONS WITHOUT THE WRITTEN AUTHORIZATION OF THE ARCHITECT OF RECORD.

COPYRIGHT © 2022 CO-AR DESIGN, INC., ALL RIGHTS RESERVED.

SEAL

REGISTERED PROFESSIONAL ENGINEER
JIA HUI PAN
M35374
EXP. 6/30/23
MECHANICAL
STATE OF CALIFORNIA

NOTES

JHP Engineering and Design Services Inc.
3103 Independence Drive
Livermore, CA 94551
TEL: 925-409-2508
CEL: 510-468-0613
FAX: 510-788-6039

PROJECT
SALTALK FREMONT KITCHEN TENANT IMPROVEMENT

42550 ALBRAE ST.,
FREMONT, CA 94538

CLIENT

SALTALK, INC.
3334 VICTOR CT.,
SANTA CLARA, CA 95054

SUBMITTALS/ REVISIONS

1	HEALTH/USD SUBMITTAL	04/01/2022
2	2ND BLD. SUBMITTAL	07/22/2022
3	3RD BLD SUBMITTAL	08/30/2022
4	3RD USD. SUBMITTAL	09/01/2022
5	2ND HEALTH SUBMITTAL	09/29/2022

PROJECT NO:	21127
SCALE:	AS SHOWN
DATE:	2/10/2022
DRAWN BY:	TL / YC
CHECKED BY:	JP

SHEET TITLE
KITCHEN HOOD CONTROL SCHEDULES

SHEET NO
M-4.6

BIMcloud: COAR-CONFERENCE - BIMcloud Basic for ARCHICAD 25/202201-Fremont-Ghost Kitchen Thursday, February 10, 2022 1:47 PM

STATE OF CALIFORNIA
Mechanical Systems
NRCC-MCH-E (Created 09/2020) CALIFORNIA ENERGY COMMISSION

CERTIFICATE OF COMPLIANCE			NRCC-MCH-E
This document is used to demonstrate compliance for mechanical systems that are within the scope of the permit application and are demonstrating compliance using the prescriptive path outlined in §140.4, or §141.0(b)2 for alterations.			
Project Name:	SALTALK FRMONT CENTRAL KITCHEN IMPROVEMENT	Report Page:	Page 1 of 12
Project Address:	42550 ALBRAE STREET	Date Prepared:	2022-03-19

A. GENERAL INFORMATION

01	Project Location (city)	FREMONT	04	Total Conditioned Floor Area	5,195
02	Climate Zone	3	05	Total Unconditioned Floor Area	
03	Occupancy Types Within Project:		06	# of Stories (Habitable Above Grade)	

☐ Office (B)	☐ Retail (M)	☐ Non-refrigerated Warehouse (S)
☐ Hotel/ Motel Guest Rooms (R-1)	☐ School (E)	☐ Healthcare Facility (I)
☐ High-Rise Residential (R-2/R-3)	☐ Relocatable Class Bldg (E)	☑ Other (Write In): Restaurant/Dining

[1] *FOOTNOTES: Climate zone can be determined on the California Energy Commission's website at http://www.energy.ca.gov/maps/renewable/building_climate_zones.html*

B. PROJECT SCOPE

Table Instructions: Include any mechanical systems that are within the scope of the permit application and are demonstrating compliance using the prescriptive path outlined in §140.4, or §141.0(b)2 for alterations.

My project consists of (check all that apply)

01	02	03
Air System(s)	Wet System Components	Dry System Components
☑ Heating Air System	☐ Water Economizer	☑ Air Economizer
☑ Cooling Air System	☐ Pumps	☐ Electric Resistance Heat
Mechanical Controls	☐ Hydronic System Piping	☑ Fan Systems
☑ Mechanical Controls (existing to remain, altered or new)	☐ Cooling Towers	☑ Ductwork (existing to remain, altered or new)
	☐ Chillers	☑ Ventilation
	☐ Boilers	☐ Zonal Systems/ Terminal Boxes

C. COMPLIANCE RESULTS

Table Instructions: If any cell on this table says "DOES NOT COMPLY" or "COMPLIES with Exceptional Conditions" refer to Table D. for guidance.

01		02		03		04		05		06		07		08	09
System Summary §110.1, §110.2, §140.4	AND	Pumps §140.4(k)	AND	Fans/ Economizers §140.4(c), §140.4(e)	AND	System Controls §110.2, §120.2, §140.4(f)	AND	Ventilation §120.1	AND	Terminal Box Controls §140.4(d)	AND	Distribution §120.3, §140.4(l)	AND	Cooling Towers §110.2(e)2	**Compliance Results**
(See Table F)		(See Table G)		(See Table H)		(See Table I)		(See Table J)		(See Table K)		(See Table L)		(See Table M)	
Yes	AND		AND	Yes	AND	Yes	AND	Yes	AND		AND	Yes	AND		**COMPLIES**
														Mandatory Measures Compliance (See Table Q for Details)	**COMPLIES**

STATE OF CALIFORNIA
Mechanical Systems
NRCC-MCH-E (Created 09/2020) CALIFORNIA ENERGY COMMISSION

CERTIFICATE OF COMPLIANCE			NRCC-MCH-E
Project Name:	SALTALK FRMONT CENTRAL KITCHEN IMPROVEMENT	Report Page:	Page 2 of 12
Project Address:	42550 ALBRAE STREET	Date Prepared:	2022-03-19

D. EXCEPTIONAL CONDITIONS

This table is auto-filled with uneditable comments because of selections made or data entered in tables throughout the form.

Table H indicates a Fan Power System Index that exceeds the maximum allowed per §140.4(c). Please revise to demonstrate compliance.
Selections made in Table O have been changed by the permit applicant. See Table E. Additional Remarks for permit applicant's explanation.

E. ADDITIONAL REMARKS

This table includes remarks made by the permit applicant to the Authority Having Jurisdiction.

F. HVAC SYSTEM SUMMARY (DRY & WET SYSTEMS)

Table Instructions: Complete the following equipment schedules to show compliance with mandatory requirements found in §110.1 and §110.2(a) and prescriptive requirements found in §140.4(a), §140.4(b) and §140.4(k) or §141.0(b)2 for alterations.

Dry System Equipment Sizing (includes air conditioners, condensers, heat pumps, VRF, furnaces and unit heaters)

01	02	03	04	05	06	07	08	09	10	11
				Equipment Sizing per Mechanical Schedule (kBtu/h) §140.4 (a&b)						
				Heating Output[2,3]			Cooling Output[2,3]		Load Calculations[3,4]	
Name or Item Tag	Equipment Category per Tables 110.2	Equipment Type per Tables 110.2 & Title 20	Smallest Size Available[1] §140.4(a)	Per Design (kBtu/h)	Rated (kBtu/h)	Supp. Heating Output (kBtu/h)	Sensible Per Design (kBtu/h)	Rated (kBtu/h)	Total Heating Load (kBtu/h)	Total Sensible Cooling Load (kBtu/h)
RTU-01	Unitary heat pumps	Air cooled, package (3 phase)	Yes	90.2	89.6	0	64.81	88.6	83.2	68.9

[1] *FOOTNOTES: Equipment shall be the smallest size, within the available options of the desired equipment line, necessary to meet the design heating and cooling loads of the building per §140.4(a). Healthcare facilities are excepted.*
[2] *It is common practice to show rated output capacity on the equipment schedule. Sensible cooling output comes from specification sheet tables.*
[3] *If equipment is heating only, leave cooling output and load blank. If equipment is cooling only, leave heating output and load blank.*
[4] *Authority Having Jurisdiction may ask for load calculations used for compliance per §140.4(b).*

Table Continued

STATE OF CALIFORNIA
Mechanical Systems
NRCC-MCH-E (Created 09/2020) CALIFORNIA ENERGY COMMISSION

CERTIFICATE OF COMPLIANCE			NRCC-MCH-E
Project Name:	SALTALK FRMONT CENTRAL KITCHEN IMPROVEMENT	Report Page:	Page 3 of 12
Project Address:	42550 ALBRAE STREET	Date Prepared:	2022-03-19

Dry System Equipment Efficiency (other than Package Terminal Air Conditioners (PTAC) and Package Terminal Heat Pumps (PTHP))

01	02	03	04	05	06	07	08	09
		Heating Mode				Cooling Mode		
Name or Item Tag	Size Category (Btu/h)	Rating Condition (°F)	Efficiency Unit	Min Efficiency Required per Tables 110.2/ Title 20	Design Efficiency	Efficiency Unit	Min Efficiency Required per Tables 110.2/ Title 20	Design Efficiency
RTU-01	≥65,000 and <135,000	47°Fdb/43°Fwb OSA	COP	3.3	3.4	EER	11	11
						IEER	12.2	13.7

G. PUMPS

This Section Does Not Apply

H. FAN SYSTEMS & AIR ECONOMIZERS

Table Instructions: Complete the following Table for fan systems to demonstrate compliance with prescriptive requirements found in §140.4(c), §140.4(e) and §140.4(m). First document the system details, then add fans within that system to document compliance with fan power requirements. Fan systems serving only process loads are exempt from these requirements and do not need to be included in Table H.

System Name:	RTU-01	Economizer:[1]	Differential Temperature	Economizer Controls:	Designed per §140.4(e) and (m)	System Fan Type:	Constant Volume

01	02	03	04	05	06	07	08
						Fan Power Pressure Drop Adjustment - Table 140.4-B	
Fan Name or Item Tag	Fan Function	Qty	Maximum Design Supply Airflow (CFM)	HP Unit[2]	Design HP	Device	Design Airflow through Device (CFM)
RTU-01	Supply	1	3,000	Nameplate HP	2.9		
						Calculated Adjustment (in H_2O)	

Total System Design Supply Airflow (CFM):	3,000	Total System Design (B)HP:	2.9	**Maximum System Fan Power (B)HP:**	

[1] *FOOTNOTE: Computer room economizers must meet requirements of §140.9(a) and will be documented on the NRCC-PRC-E document.*
[2] *The unit used for HP must be consistent for all fans within a system.*

STATE OF CALIFORNIA
Mechanical Systems
NRCC-MCH-E (Created 09/2020) CALIFORNIA ENERGY COMMISSION

CERTIFICATE OF COMPLIANCE			NRCC-MCH-E
Project Name:	SALTALK FRMONT CENTRAL KITCHEN IMPROVEMENT	Report Page:	Page 4 of 12
Project Address:	42550 ALBRAE STREET	Date Prepared:	2022-03-19

I. SYSTEM CONTROLS

Table Instructions: Complete the following Table to demonstrate compliance with mandatory controls in §110.2 and §120.2 and prescriptive controls in §140.4(f) and (n) or requirements in §141.0(b)2E for altered space conditioning systems.

01	02	03	04	05	06	07	08	09
System Name	System Zoning	Conditioned Floor Area Being Served (ft²)	Thermostats §110.2(b) & (c)[1], §120.2(a) or §141.0(b)2E	Shut-Off Controls §120.2(e)	Isolation Zone Controls §120.2(g)	Demand Response §110.12 and §120.2(b)	Supply Air Temp. Reset §140.4(f)	Window Interlocks per §140.4(n)
RTU-01	single zone	≤ 25,000 ft²	Setback Thermostat	NA: 7 day per §120.2(e)1	NA: Single Zone		NA: Single Zone	NA: No operable windows

[1] *FOOTNOTES: Gravity gas wall heaters, gravity floor heaters, gravity room heaters, non-central electric heaters, fireplaces or decorative gas appliances, wood stoves are not required to have setback thermostats.*
** NOTES: Controls with a * require a note in the space below explaining how compliance is achieved.*
EX: System 1: SA Temp Reset: Exempt because zones compliant with §140.4(d); EXCEPTION 1 to §140.4(f)

J. VENTILATION AND INDOOR AIR QUALITY

Table Instructions: Complete the following Table to demonstrate compliance with mandatory ventilation requirements in §120.1 and §120.2(e)3B for all nonresidential, high-rise residential and hotel/motel occupancies. For alterations, only ventilation systems being altered within the scope of the permit application need to be documented in this table. In lieu of this table, the required outdoor ventilation rates and airflows may be shown on the plans or the calculations can be presented in a spreadsheet.

01	☐	Check the box if the project is showing ventilation calculations on the plans, or attaching the calculations instead of completing this table.
02	☑	Check this box if the project includes Nonresidential or Hotel/Motel spaces
	☐	Check this box if the project includes new or altered high-rise residential dwelling units
03	☐	Check the box if the project is using natural ventilation in any spaces to meet required ventilation rates per §120.1(c)2.

Nonresidential and Hotel/ Motel Ventilation Systems

04		05		06		07
System Name:	RTU-01	System Design OA CFM Air Flow[1]:	1,750	System Design Transfer Air CFM:	0	Air Filtration per §120.1(c) and §141.0(b)2[2]
						Provided per §120.1(c) (NR & Hotel/Motel)

Table Continued

STATE OF CALIFORNIA
Mechanical Systems
NRCC-MCH-E (Created 09/2020) CALIFORNIA ENERGY COMMISSION

CERTIFICATE OF COMPLIANCE			NRCC-MCH-E
Project Name:	SALTALK FRMONT CENTRAL KITCHEN IMPROVEMENT	Report Page:	Page 5 of 12
Project Address:	42550 ALBRAE STREET	Date Prepared:	2022-03-19

Table Continued

08	09	10	11	12	13	14	15	16	
	Mechanical Ventilation Required per §120.1(c)3[3]					Exh. Vent. per §120.1(c)4			
Space Name or Item Tag	Occupancy Type[4]	Conditioned Floor Area (ft²)	# of showerheads / toilets	# of people[5]	Required Min OA CFM	Required Minimum CFM	Provided per Design CFM	DCV or Occupant Sensor Controls per §120.1(d)3, §120.1(d)5 & §120.2(e)3[6]	
HALLWAY	Corridor	2,322			348.3		350	DCV	NA: Not required per §120.1(d)3
								Occ Sensor	NA: Not required space type
RECEIVING	Shipping/ receiving	630		2	94.5		100	DCV	NA: Not required per §120.1(d)3
								Occ Sensor	NA: Not required space type
DINING	Restaurant Dining Rooms	1,835		70	1,050		1,300	DCV	NA: Not required per §120.1(d)3
								Occ Sensor	NA: Not required space type

17	Total System Required Min OA CFM	1,492.8	18	Ventilation for this System Complies?	Yes

[1] *FOOTNOTES: System CFM should include both mechanical and natural ventilation for the zone/system.*
[2] *Air filtration requirements apply to the following three system types per §120.1(c)1A: space conditioning systems utilizing ducts to supply air to occupiable space; supply-only ventilation systems providing outside air to occupiable space; supply side of balanced ventilation systems including heat recovery and energy recovery ventilation systems providing outside air to occupiable space.*
[3] *Uniform Mechanical Code may have more stringent ventilation requirements; the most stringent code requirement takes precedence.*
[4] *See Standards Tables 120.1-A and 120.1-B*
[5] *For lecture halls with fixed seating, the expected number of occupants shall be determined in accordance with the California Building Code.*
[6] *§120.2(e)3 requires systems serving rooms that are required by §130.1(c) to have lighting occupancy sensing controls to also have occupancy sensing zone controls for ventilation. Examples of spaces which require lighting occupancy sensors include offices 250ft² or smaller, multipurpose rooms less than 1,000ft², classrooms, conference rooms, restrooms, aisles and open areas in warehouses, library book stack aisles, corridors, stairwells, parking garages, and loading and unloading zones, unless excepted by §130.1(c).*

STATE OF CALIFORNIA
Mechanical Systems
NRCC-MCH-E (Created 09/2020) CALIFORNIA ENERGY COMMISSION

CERTIFICATE OF COMPLIANCE			NRCC-MCH-E
Project Name:	SALTALK FRMONT CENTRAL KITCHEN IMPROVEMENT	Report Page:	Page 6 of 12
Project Address:	42550 ALBRAE STREET	Date Prepared:	2022-03-19

K. TERMINAL BOX CONTROLS

This Section Does Not Apply

L. DISTRIBUTION (DUCTWORK AND PIPING)

Table Instructions: Complete the following tables to show compliance with mandatory pipe insulation requirements found in §120.3 and prescriptive requirements found in §140.4(l) for duct leakage testing.

Duct Leakage Sealing

The answers to the questions below apply to the following duct system(s):	RTU-01	Duct leakage testing triggered for these systems?	No

11	No	The scope of the project includes only duct systems serving healthcare facilites.	
12	Yes	Duct system provides conditioned air to an occupiable space for a constant volume, single zone, space-conditioning system.	
13	No	The space conditioning system serves less than 5,000 ft² of conditioned floor area.	
14	No	The combined surface area of the ducts in the following locations is more than 25% of the total surface area of the entire duct system:	
		☐	Outdoors
		☐	In a space directly under a roof that has a U-factor greater than the U-factor of the ceiling, or if the roof does not meet the requirements of §140.3(a)1B or if the roof has fixed vents or openings to the outside/ unconditioned spaces
		☐	In an unconditioned crawlspace
		☐	In other unconditioned spaces
15	No	The scope of the project includes extending an existing duct system, which is constructed, insulated or sealed with asbestos.	
16	No	The scope of the project includes an existing duct system that is documented to have been previously sealed as confirmed through field verification and diagnostic testing in accordance with procedures in the Reference Nonresidential Appendix NA2.	
17		Duct system shall be sealed in accordance with the California Mechanical Code.	

M. COOLING TOWERS

This Section Does Not Apply

N. DECLARATION OF REQUIRED CERTIFICATES OF INSTALLATION

Table Instructions: Selections have been made based on information provided in previous tables of this document. If any selection needs to be changed, please explain why in Table E. Additional Remarks. These documents must be provided to the building inspector during construction and can be found online at https://www.energy.ca.gov/title24/2019standards/2019_compliance_documents/Nonresidential_Documents/NRCI/

YES	NO	Form/Title	Systems To Be Field Verified	Field Inspector Pass	Field Inspector Fail

STATE OF CALIFORNIA
Mechanical Systems
NRCC-MCH-E (Created 09/2020) CALIFORNIA ENERGY COMMISSION

CERTIFICATE OF COMPLIANCE			NRCC-MCH-E
Project Name:	SALTALK FRMONT CENTRAL KITCHEN IMPROVEMENT	Report Page:	Page 7 of 12
Project Address:	42550 ALBRAE STREET	Date Prepared:	2022-03-19

●		NRCI-MCH-01-E - Must be submitted for all buildings.		☐	☐

STATE OF CALIFORNIA
Mechanical Systems
NRCC-MCH-E (Created 09/2020) CALIFORNIA ENERGY COMMISSION

CERTIFICATE OF COMPLIANCE			NRCC-MCH-E
Project Name:	SALTALK FRMONT CENTRAL KITCHEN IMPROVEMENT	Report Page:	Page 8 of 12
Project Address:	42550 ALBRAE STREET	Date Prepared:	2022-03-19

O. DECLARATION OF REQUIRED CERTIFICATES OF ACCEPTANCE

Table Instructions: Selections have been made based on information provided in previous tables of this document. If any selection needs to be changed, please explain why in Table E. Additional Remarks. These documents must be provided to the building inspector during construction and can be found online at https://www.energy.ca.gov/title24/2019standards/2019_compliance_documents/Nonresidential_Documents/NRCA/

YES	NO	Form/Title	Systems To Be Field Verified	Field Inspector Pass	Field Inspector Fail
●	○	NRCA-MCH-02-A Outdoor Air must be submitted for all newly installed HVAC units. *Note: MCH02-A can be performed in conjunction with MCH-07-A Supply Fan VFD Acceptance (if applicable) since testing activities overlap.*		☐	☐
●	○	NRCA-MCH-03-A Constant Volume Single Zone HVAC *NOTE: This form does not automatically move to "Yes". If Constant Volume Single Zone HVAC Systems are included in the scope, permit applicant should move this form to "Yes".*		☐	☐
○	●	NRCA-MCH-04-A Air Distribution Duct Leakage		☐	☐
●	○	NRCA-MCH-05-A Air Economizer Controls		☐	☐
○	●	NRCA-MCH-06-A Demand Control Ventilation Systems Acceptance must be submitted for all systems required to employ demand controlled ventilation (refer to §120.1(c)3) can vary outside ventilation flow rates based on maintaining interior carbon dioxide (CO2) concentration setpoints.		☐	☐
○	●	NRCA-MCH-07-A Supply Fan Variable Flow Controls		☐	☐
○	●	NRCA-MCH-08-A Valve Leakage Test		☐	☐
○	●	NRCA-MCH-09-A Supply Water Temperature Reset Controls		☐	☐
○	●	NRCA-MCH-10-A Hydronic System Variable Flow Controls		☐	☐
○	●	NRCA-MCH-11-A Automatic Demand Shed Controls		☐	☐

STATE OF CALIFORNIA
Mechanical Systems
NRCC-MCH-E (Created 09/2020) CALIFORNIA ENERGY COMMISSION

CERTIFICATE OF COMPLIANCE			NRCC-MCH-E
Project Name:	SALTALK FRMONT CENTRAL KITCHEN IMPROVEMENT	Report Page:	Page 9 of 12
Project Address:	42550 ALBRAE STREET	Date Prepared:	2022-03-19

●	○	NRCA-MCH-12-A FDD for Packaged Direct Expansion Units		☐	☐
○	●	NRCA-MCH-13-A Automatic FDD for Air Handling Units and Zone Terminal Units Acceptance		☐	☐
○	●	NRCA-MCH-14-A Distributed Energy Storage DX AC Systems Acceptance *NOTE: This form does not automatically move to "Yes". If Distributed Energy Storage DX AC Systems are included in the scope, permit applicant should move this form to "Yes".*		☐	☐
○	●	NRCA-MCH-15-A Thermal Energy Storage (TES) System Acceptance *NOTE: This form does not automatically move to "Yes". If Chilled Water Storage, Ice-on-Coil Internal Melt, Ice-on-Coil External Melt, Ice Harvester, Brine, Ice-Slurry, Eutectic Salt, Clathrate Hydrate Slurry (CHS), Cryogenic or Encapulated (Ice Ball) Systems are included in the scope, permit applicant should move this form to "Yes".*		☐	☐
○	●	NRCA-MCH-16-A Supply Air Temperature Reset Controls		☐	☐
○	●	NRCA-MCH-17-A Condenser Water Temperature Reset Controls		☐	☐
○	●	NRCA-MCH-18 Energy Management Control Systems		☐	☐
○	●	NRCA-MCH-19 Occupancy Sensor Controls		☐	☐
○	●	NRCA-MCH-20 Multi-Family Ventilation		☐	☐
○	●	NRCA-MCH-21 Multi-Family Envelope Leakage		☐	☐

Alameda County
Dept. of Environmental Health
Approved By: T. Tran

CO-AR DESIGN, INC.
680 Brea Canyon Rd., Ste. 178
Diamond Bar, CA 91789

Office: 909-598-0186
http:\\www.coardesign.com

Dennis J. Lee, Architect
dennisl@coardesign.com

THESE DRAWINGS ARE THE PROPERTY OF THE ARCHITECT. THE DESIGNS SHOWN AND DESCRIBED HERIN INCLUDING ALL TECHNICAL DRAWINGS ARE PROPRIETARY AND CANNOT BE COPIED, DUPLICATED OR COMMERCIALLY EXPLOITED, IN WHOLE OR IN PART. THE DRAWINGS AND SPECIFICATIONS SHALL NOT BE USED BY THE OWNER ON OTHER PROJECTS, FOR ADDITIONS TO THIS PROJECT, OR FOR COMPLETION OF THIS PROJECT BY OTHERS. THE OWNER AGREES TO HOLD HARMLESS, INDEMNIFY AND DEFEND THE ARCHITECT AGAINST ALL DAMAGES, CLAIMS AND LOSSES, INCLUDING DEFENSE COSTS, ARISING OUT OF ANY REUSE OF THE PLANS AND SPECIFICATIONS WITHOUT THE WRITTEN AUTHORIZATION OF THE ARCHITECT OF RECORD.

COPYRIGHT © 2022 CO-AR DESIGN, INC., ALL RIGHTS RESERVED.

SEAL

REGISTERED PROFESSIONAL ENGINEER
JIA HUI PAN
M35374
EXP 6/30/23
MECHANICAL
STATE OF CALIFORNIA

NOTES

JHP Engineering and Design Services Inc.
3103 Independence Drive
Livermore, CA 94551
TEL: 925-409-2508
CEL: 510-468-0613
FAX: 510-788-6039

PROJECT
SALTALK FREMONT KITCHEN TENANT IMPROVEMENT

42550 ALBRAE ST.,
FREMONT, CA 94538

CLIENT

SALTALK, INC.
3334 VICTOR CT.,
SANTA CLARA, CA 95054

SUBMITTALS/ REVISIONS

1	HEALTH/USD SUBMITTAL	04/01/2022
2	2ND BLD. SUBMITTAL	07/22/2022
3	3RD BLD. SUBMITTAL	08/30/2022
4	3RD USD. SUBMITTAL	09/01/2022
5	2ND HEALTH SUBMITTAL	09/29/2022

PROJECT NO:	21127
SCALE:	AS SHOWN
DATE:	2/10/2022
DRAWN BY:	TL / YC
CHECKED BY:	JP

SHEET TITLE
MECHANICAL PRESCRIPTIVE TITLE 24 COMPLIANCE

SHEET NO
M-5.0

BIMcloud: COAR-CONFERENCE - BIMcloud Basic for ARCHICAD 25/202201-Fremont-Ghost Kitchen Thursday, February 10, 2022 1:47 PM

STATE OF CALIFORNIA

Mechanical Systems

NRCC-MCH-E (Created 09/2020) CALIFORNIA ENERGY COMMISSION

CERTIFICATE OF COMPLIANCE		NRCC-MCH-E
Project Name: SALTALK FRMONT CENTRAL KITCHEN IMPROVEMENT	Report Page:	Page 10 of 12
Project Address: 42550 ALBRAE STREET	Date Prepared:	2022-03-19

P. DECLARATION OF REQUIRED CERTIFICATES OF VERIFICATION

Table Instructions: Selections have been made based on information provided in previous tables of this document. If any selection needs to be changed, please explain why in Table E. Additional Remarks. These documents must be completed by a HERS Rater and provided to the building inspector during construction. The final documents must be created by a HERS Providers registry, but drafts can be found online at https://www.energy.ca.gov/title24/2019standards/2019_compliance_documents/Nonresidential_Documents/NRCV/

YES	NO	Form/Title	Field Inspector	
			Pass	Fail
○	●	NRCV-MCH-04-H Duct Leakage Test *NOTE: Must be completed by a HERS Rater*	☐	☐
○	●	NRCV-MCH-24 Enclosure Air Leakage Worksheet *NOTE: Must be completed by a HERS Rater*	☐	☐
○	●	NRCV-MCH-27 High-rise Residential *NOTE: Must be completed by a HERS Rater*	☐	☐
○	●	NRCV-MCH-32 Local Mechanical Exhaust *NOTE: Must be completed by a HERS Rater*	☐	☐

STATE OF CALIFORNIA

Mechanical Systems

NRCC-MCH-E (Created 09/2020) CALIFORNIA ENERGY COMMISSION

CERTIFICATE OF COMPLIANCE		NRCC-MCH-E
Project Name: SALTALK FRMONT CENTRAL KITCHEN IMPROVEMENT	Report Page:	Page 11 of 12
Project Address: 42550 ALBRAE STREET	Date Prepared:	2022-03-19

Q. MANDATORY MEASURES DOCUMENTATION LOCATION

Table Instructions: Indicate where mandatory measures are documented in the plan set or construction documentation. For any mandatory measures that do not apply, mark the plan sheet or construction document location as "N/A", any active cells that are left blank will result in non-compliance in Table C.

01		02
		Plan sheet or construction document location
Compliance with Mandatory Measures documented through MCH Mandatory Measures Note Block:	Yes	M-0.8

STATE OF CALIFORNIA

Mechanical Systems

NRCC-MCH-E (Created) CALIFORNIA ENERGY COMMISSION

CERTIFICATE OF COMPLIANCE		NRCC-MCH-E
Project Name: SALTALK FRMONT CENTRAL KITCHEN IMPROVEMENT	Report Page:	Page 12 of 12
Project Address: 42550 ALBRAE STREET	Date Prepared:	2022-03-19

DOCUMENTATION AUTHOR'S DECLARATION STATEMENT

1. I certify that this Certificate of Compliance documentation is accurate and complete.

Documentation Author Name:	Jia Hui Pan	Documentation Author Signature:	[signature]
Company:	JHP Engineering and Design Services, Inc.	Signature Date:	03/19/2022
Address:	3103 Independence Drive,	CEA/ HERS Certification Identification (if applicable):	
City/State/Zip:	Livermore, CA 94551	Phone:	925-409-2508

RESPONSIBLE PERSON'S DECLARATION STATEMENT

I certify the following under penalty of perjury, under the laws of the State of California:

1. **The information provided on this Certificate of Compliance is true and correct.**
2. **I am eligible under Division 3 of the Business and Professions Code to accept responsibility for the building design or system design identified on this Certificate of Compliance (responsible designer)**
3. **The energy features and performance specifications, materials, components, and manufactured devices for the building design or system design identified on this Certificate of Compliance conform to the requirements of Title 24, Part 1 and Part 6 of the California Code of Regulations.**
4. **The building design features or system design features identified on this Certificate of Compliance are consistent with the information provided on other applicable compliance documents, worksheets, calculations, plans and specifications submitted to the enforcement agency for approval with this building permit application.**
5. **I will ensure that a completed signed copy of this Certificate of Compliance shall be made available with the building permit(s) issued for the building, and made available to the enforcement agency for all applicable inspections. I understand that a completed signed copy of this Certificate of Compliance is required to be included with the documentation the builder provides to the building owner at occupancy.**

Responsible Designer Name:	Jia Hui Pan	Responsible Designer Signature:	[signature]
Company :	JHP Engineering and Design Services, Inc.	Date Signed:	03/19/2022
Address:	3103 Independence Drive,	License:	M35374
City/State/Zip:	Livermore, CA 94551	Phone:	925-409-2508

Alameda County
Dept. of Environmental Health
Approved By: T. Tran

CO-AR DESIGN, INC.
680 Brea Canyon Rd., Ste. 178
Diamond Bar, CA 91789

Office: 909-598-0186
http:\\www.coardesign.com

Dennis J. Lee, Architect
dennisl@coardesign.com

THESE DRAWINGS ARE THE PROPERTY OF THE ARCHITECT. THE DESIGNS SHOWN AND DESCRIBED HERIN INCLUDING ALL TECHNICAL DRAWINGS ARE PROPRIETARY AND CANNOT BE COPIED, DUPLICATED OR COMMERCIALLY EXPLOITED, IN WHOLE OR IN PART. THE DRAWINGS AND SPECIFICATIONS SHALL NOT BE USED BY THE OWNER ON OTHER PROJECTS, FOR ADDITIONS TO THIS PROJECT, OR FOR COMPLETION OF THIS PROJECT BY OTHERS. THE OWNER AGREES TO HOLD HARMLESS, INDEMNIFY AND DEFEND THE ARCHITECT AGAINST ALL DAMAGES, CLAIMS AND LOSSES, INCLUDING DEFENSE COSTS, ARISING OUT OF ANY REUSE OF THE PLANS AND SPECIFICATIONS WITHOUT THE WRITTEN AUTHORIZATION OF THE ARCHITECT OF RECORD

COPYRIGHT © 2022 CO-AR DESIGN, INC., ALL RIGHTS RESERVED.

SEAL

REGISTERED PROFESSIONAL ENGINEER
JIA HUI PAN
M35374
EXP. 6/30/23
MECHANICAL
STATE OF CALIFORNIA

NOTES

JHP Engineering and Design Services Inc.
3103 Independence Drive
Livermore, CA 94551
TEL: 925-409-2508
CEL: 510-468-0613
FAX: 510-788-6039

PROJECT

SALTALK FREMONT KITCHEN TENANT IMPROVEMENT

42550 ALBRAE ST.,
FREMONT, CA 94538

CLIENT

SALTALK, INC.
3334 VICTOR CT.,
SANTA CLARA, CA 95054

SUBMITTALS/ REVISIONS

1	HEALTH/USD SUBMITTAL	04/01/2022
2	2ND BLD. SUBMITTAL	07/22/2022
3	3RD BLD. SUBMITTAL	08/30/2022
4	3RD USD. SUBMITTAL	09/01/2022
5	2ND HEALTH SUBMITTAL	09/29/2022

PROJECT NO:	21127
SCALE:	AS SHOWN
DATE:	2/10/2022
DRAWN BY:	TL / YC
CHECKED BY:	JP

SHEET TITLE

MECHANICAL PRESCRIPTIVE TITLE 24 COMPLIANCE

SHEET NO

M-5.1

BIMcloud: COAR-CONFERENCE - BIMcloud Basic for ARCHICAD 25/202201-Fremont Ghost Kitchen Thursday, February 10, 2022 1:47 PM

STATE OF CALIFORNIA
Process Systems
NRCC-PRC-E (Created 11/19)
CALIFORNIA ENERGY COMMISSION

CERTIFICATE OF COMPLIANCE		NRCC-PRC-E
Table Instructions: Include any process systems that are within the scope of the permit application and are demonstrating compliance with mandatory requirements in §120.6, or prescriptive requirements in §140.9. This compliance document is used for newly constructed, addition and alteration projects.		
Project Name: SALTALK FRMONT CENTRAL KITCHEN IMPROVEMENT	Report Page:	Page 1 of 7
Project Address: 42550 ALBRAE STREET	Date Prepared:	2022-03-19

A. GENERAL INFORMATION

01	Project Location (city)	FREMONT	04	Total Conditioned Floor Area	5,195
02	Climate Zone	3	05	Total Unconditioned Floor Area	
03	Occupancy Types Within Project:		06	# of Stories (Habitable Above Grade)	

- ☐ Office
- ☐ Hotel/ Motel
- ☐ High-Rise Residential
- ☐ Retail
- ☐ School
- ☐ Relocatable Class Bldg
- ☐ Non-refrigerated Warehouse
- ☐ Healthcare Facility
- ☑ Other (Write In): Restaurant/Dining

B. PROJECT SCOPE
Table Instructions: Include any process systems listed below within the scope of the permit application that are demonstrating compliance with mandatory requirements in §120.6 or prescriptive requirements in §140.9.

My project consists of (check all that apply):

01	02
☐ Refrigerated Spaces <3,000 ft² Total (no Title 24, Pt 6 requirements)	☐ Elevator Lighting & Ventilation Controls (mandatory §120.6(f))
☐ Refrigerated Spaces ≥3,000 ft² Total (mandatory §120.6(a))	☐ Escalator & Moving Walkway Speed Controls (mandatory §120.6(g))
☐ Food Stores > 8,000 ft² cfa (mandatory §120.6(b))	☐ Computer Rooms > 20W/ft² Power Density (prescriptive §140.9(a))[1]
☐ Enclosed Parking Garage Exhaust ≥ 10,000 cfm (mandatory §120.6(c))	☑ Commercial Kitchen Ventilation/Exhaust (prescriptive §140.9(b))[1]
☐ Newly Installed Process Boilers (mandatory §120.6(d))	☐ Laboratory Exhaust/Factory Exhaust & Fume Hood (prescriptive §140.9(c))[1]
☐ Compressed Air Systems Combined HP ≥ 25 (mandatory §120.6(e))	

[1] FOOTNOTES: These building features can comply using the performance method. If using the performance method for these features, compliance should be demonstrated on the NRCC-PRF-E compliance document.

C. COMPLIANCE RESULTS
Table Instructions: If any cell on this table says "DOES NOT COMPLY" or "COMPLIES with Exceptional Conditions" refer to Table D. for guidance.

01	02	03	04	05	06	07	08	09	10	11
Refrigerated Warehouse/ Space §120.6(a)	Commercial Refrigeration §120.6(b)	Parking Garage Exhaust §120.6(c)	Process Boilers §120.6(d)	Compressed Air Systems §120.6(e)	Elevators §120.6(f)	Escalators & Moving Walkways §120.6(g)	Computer Rooms §140.9(a)	Commercial Kitchens §140.9(b)	Laboratory Exhaust §140.9(c)	**Compliance Results**
(See Table F)	(See Table G)	(See Table H)	(See Table I)	(See Table J)	(See Table K)	(See Table L)	(See Table M)	(See Table N)	(See Table O)	
								Yes		**COMPLIES**

STATE OF CALIFORNIA
Process Systems
NRCC-PRC-E (Created 11/19) CALIFORNIA ENERGY COMMISSION
CERTIFICATE OF COMPLIANCE NRCC-PRC-E
Table Instructions: Include any process systems that are within the scope of the permit application and are demonstrating compliance with mandatory requirements in §120.6, or prescriptive requirements in §140.9. This compliance document is used for newly constructed, addition and alteration projects.
Project Name: SALTALK FRMONT CENTRAL KITCHEN IMPROVEMENT
Report Page: Page 2 of 7
Project Address: 42550 ALBRAE STREET Date Prepared: 2022-03-19

D. EXCEPTIONAL CONDITIONS
This table is auto-filled with uneditable comments because of selections made or data entered in tables throughout the form.

No exceptional conditions apply to this project.

E. ADDITIONAL REMARKS
This table includes remarks made by the permit applicant to the Authority Having Jurisdiction.

F. REFRIGERATED WAREHOUSE/SPACES
This Section Does Not Apply

G. COMMERCIAL REFRIGERATION
This Section Does Not Apply

H. ENCLOSED PARKING GARAGE EXHAUST
This Section Does Not Apply

I. PROCESS BOILER
This Section Does Not Apply

J. COMPRESSED AIR SYSTEMS
This Section Does Not Apply

K. ELEVATOR LIGHTING AND VENTILATION
This Section Does Not Apply

L. ESCALATORS AND MOVING WALKWAYS SPEED CONTROLS
This Section Does Not Apply

STATE OF CALIFORNIA
Process Systems
NRCC-PRC-E (Created 11/19) CALIFORNIA ENERGY COMMISSION
CERTIFICATE OF COMPLIANCE NRCC-PRC-E
Table Instructions: Include any process systems that are within the scope of the permit application and are demonstrating compliance with mandatory requirements in §120.6, or prescriptive requirements in §140.9. This compliance document is used for newly constructed, addition and alteration projects.
Project Name: SALTALK FRMONT CENTRAL KITCHEN IMPROVEMENT
Report Page: Page 3 of 7
Project Address: 42550 ALBRAE STREET Date Prepared: 2022-03-19

M. COMPUTER ROOM SYSTEM SUMMARY
This Section Does Not Apply

N. COMMERCIAL KITCHEN EXHAUST AND VENTILATION
Table Instructions: Complete the following table to demonstrate compliance with prescriptive requirements found in §140.9(b). Requirements only apply to new hoods or replacement hoods being installed as part of the permitted scope. Existing hoods not being replaced, or any hoods within a healthcare facility do not need to meet requirements.

Kitchen Ventilation §140.9(b)2

01	☐	Existing kitchen hoods not being replaced as part of an addition or alteration (do not need to meet requirements)
		Requirements
		Replacement Air to Hood Compliance Method §140.9(b)1A
02		Not providing replacement air directly to the hood(s)

	Mechanically cooled or heated makeup air delivered to any space with a kitchen hood is designed per 140.9(b)2A to not exceed the greater of:
03	NA: Make up air is not mechanically cooled or heated

05	The kitchen /dining facility has a total Type I and Type II kitchen hood exhaust airflow rate > 5000 cfm and is dign to have one of the following per 140.9(b)2B:
	A minimum of 75% of makeup air volume having a total of no more than 60°F and uncooled or cooled without the use of mechanical cooling

Kitchen Exhaust: Airflow Rate §140.9(b)2

01	Kitchen Name or Tag	K1 - K23	Compliance Method per §140.9(b)1B	Type I hood design exhaust rates do not exceed the maximum allowed per §140.9(b)1 as documented below.		
02	03	04	05	06	07	08
Name or Item Tag	Hood Type[1]	Hood Style	Hood Length (ft)	Equipment Duty	Design Hood Exhaust Rate (CFM)	Max Hood Exhaust Rate Allowed (CFM)
K1-K23	Type I	Wall-mounted Canopy	12	Heavy Duty	3,000	3,360

Table Continued

STATE OF CALIFORNIA
Process Systems
NRCC-PRC-E (Created 11/19) CALIFORNIA ENERGY COMMISSION
CERTIFICATE OF COMPLIANCE NRCC-PRC-E
Table Instructions: Include any process systems that are within the scope of the permit application and are demonstrating compliance with mandatory requirements in §120.6, or prescriptive requirements in §140.9. This compliance document is used for newly constructed, addition and alteration projects.
Project Name: SALTALK FRMONT CENTRAL KITCHEN IMPROVEMENT
Report Page: Page 4 of 7
Project Address: 42550 ALBRAE STREET Date Prepared: 2022-03-19

Kitchen Exhaust: Airflow Rate §140.9(b)2

01	Kitchen Name or Tag	K24	Compliance Method per §140.9(b)1B	Type I hood design exhaust rates do not exceed the maximum allowed per §140.9(b)1 as documented below.		
02	03	04	05	06	07	08
Name or Item Tag	Hood Type[1]	Hood Style	Hood Length (ft)	Equipment Duty	Design Hood Exhaust Rate (CFM)	Max Hood Exhaust Rate Allowed (CFM)
K24	Type I	Wall-mounted Canopy	14	Heavy Duty	3,500	3,920

Kitchen Exhaust: Airflow Rate §140.9(b)2

01	Kitchen Name or Tag	K25-K-27	Compliance Method per §140.9(b)1B	Type I hood design exhaust rates do not exceed the maximum allowed per §140.9(b)1 as documented below.		
02	03	04	05	06	07	08
Name or Item Tag	Hood Type[1]	Hood Style	Hood Length (ft)	Equipment Duty	Design Hood Exhaust Rate (CFM)	Max Hood Exhaust Rate Allowed (CFM)
K25-K-27	Type I	Wall-mounted Canopy	12	Heavy Duty	3,000	3,360

Kitchen Exhaust: Airflow Rate §140.9(b)2

01	Kitchen Name or Tag	K28	Compliance Method per §140.9(b)1B	Type I hood design exhaust rates do not exceed the maximum allowed per §140.9(b)1 as documented below.		
02	03	04	05	06	07	08
Name or Item Tag	Hood Type[1]	Hood Style	Hood Length (ft)	Equipment Duty	Design Hood Exhaust Rate (CFM)	Max Hood Exhaust Rate Allowed (CFM)
K28	Type I	Wall-mounted Canopy	14	Heavy Duty	3,500	3,920

STATE OF CALIFORNIA
Process Systems
NRCC-PRC-E (Created 11/19) CALIFORNIA ENERGY COMMISSION
CERTIFICATE OF COMPLIANCE NRCC-PRC-E
Table Instructions: Include any process systems that are within the scope of the permit application and are demonstrating compliance with mandatory requirements in §120.6, or prescriptive requirements in §140.9. This compliance document is used for newly constructed, addition and alteration projects.
Project Name: SALTALK FRMONT CENTRAL KITCHEN IMPROVEMENT
Report Page: Page 5 of 7
Project Address: 42550 ALBRAE STREET Date Prepared: 2022-03-19

Table Continued

[1] FOOTNOTE: Type II hoods do not have a max hood exhaust air rate per Part 6 §140.9(b)1B.

O. LABORATORY AND FACTORY EXHAUST AND FUME HOODS
This Section Does Not Apply

P. DECLARATION OF REQUIRED CERTIFICATES OF INSTALLATION
Table Instructions: Selections have been made based on information provided in previous tables of this document. If any selection needs to be changed, please explain why in Table E. Additional Remarks. These documents must be provided to the building inspector during construction and can be found online at https://ww2.energy.ca.gov/title24/2019standards/2019_compliance_documents/Nonresidential_Documents/NRCA/.

YES	NO	Form/Title	Field Inspector Pass	Field Inspector Fail
◉	○	NRCI-PRC 01-E Covered Process	☐	☐

Q. DECLARATION OF REQUIRED CERTIFICATES OF ACCEPTANCE
Table Instructions: Selections have been made based on information provided in previous tables of this document. If any selection needs to be changed, please explain why in Table E. Additional Remarks. These documents must be provided to the building inspector during construction and can be found online at https://ww2.energy.ca.gov/title24/2019standards/2019_compliance_documents/Nonresidential_Documents/NRCA/.

YES	NO	Form/Title	Field Inspector Pass	Field Inspector Fail
○	◉	NRCA-PRC-01-F Compressed Air Systems	☐	☐
◉	○	NRCA-PRC-02-F Kitchen Exhaust	☐	☐
○	◉	NRCA-PRC-03-F Garage Exhaust	☐	☐
○	◉	NRCA-PRC-04-F Refrigerated Warehouses - Evaporator Fan Motor Controls	☐	☐
○	◉	NRCA-PRC-05-F Refrigerated Warehouses - Evaporative Condenser Controls	☐	☐
○	◉	NRCA-PRC-06-Refrigerated Warehouses - Air Cooled Condenser Controls	☐	☐
○	◉	NRCA-PRC-16-Refrigerated Warehouses - Adiabatic Condenser Controls	☐	☐
○	◉	NRCA-PRC-07 Refrigerated Warehouses - Variable Speed Compressor	☐	☐
○	◉	NRCA-PRC-08-F Refrigerated Warehouses - Electric Resistance Underslab Heating System	☐	☐
○	◉	NRCA-PRC-12-F Elevator Lighting & Ventilation Controls	☐	☐

STATE OF CALIFORNIA
Process Systems
NRCC-PRC-E (Created 11/19) CALIFORNIA ENERGY COMMISSION
CERTIFICATE OF COMPLIANCE NRCC-PRC-E
Table Instructions: Include any process systems that are within the scope of the permit application and are demonstrating compliance with mandatory requirements in §120.6, or prescriptive requirements in §140.9. This compliance document is used for newly constructed, addition and alteration projects.
Project Name: SALTALK FRMONT CENTRAL KITCHEN IMPROVEMENT
Report Page: Page 6 of 7
Project Address: 42550 ALBRAE STREET Date Prepared: 2022-03-19

YES	NO	Form/Title	Pass	Fail
○	◉	NRCA-PRC-13-F Escalators & Moving Walkways Speed Controls	☐	☐
○	◉	NRCA-PRC-14-F Lab Exhaust Ventilation Systems	☐	☐
○	◉	NRCA-PRC-15-F Fume Hood Automatic Sash Closure Systems	☐	☐

STATE OF CALIFORNIA
Process Systems
NRCC-PRC-E (Created 11/19) CALIFORNIA ENERGY COMMISSION
CERTIFICATE OF COMPLIANCE NRCC-PRC-E
Table Instructions: Include any process systems that are within the scope of the permit application and are demonstrating compliance with mandatory requirements in §120.6, or prescriptive requirements in §140.9. This compliance document is used for newly constructed, addition and alteration projects.
Project Name: SALTALK FRMONT CENTRAL KITCHEN IMPROVEMENT
Report Page: Page 7 of 7
Project Address: 42550 ALBRAE STREET Date Prepared: 2022-03-19

DOCUMENTATION AUTHOR'S DECLARATION STATEMENT
1. I certify that this Certificate of Compliance documentation is accurate and complete.

Documentation Author Name:	Jia Hui pan	Documentation Author Signature:	
Company:	JHP Engineering and Design Services, Inc.	Signature Date:	2022-03-19
Address:	3103 Independence Drive,	CEA/ HERS Certification Identification (if applicable):	
City/State/Zip:	Livermore, CA 94551	Phone:	925-409-2508

RESPONSIBLE PERSON'S DECLARATION STATEMENT

I certify the following under penalty of perjury, under the laws of the State of California:

1. **The information provided on this Certificate of Compliance is true and correct.**
2. **I am eligible under Division 3 of the Business and Professions Code to accept responsibility for the building design or system design identified on this Certificate of Compliance (responsible designer)**
3. **The energy features and performance specifications, materials, components, and manufactured devices for the building design or system design identified on this Certificate of Compliance conform to the requirements of Title 24, Part 1 and Part 6 of the California Code of Regulations.**
4. **The building design features or system design features identified on this Certificate of Compliance are consistent with the information provided on other applicable compliance documents, worksheets, calculations, plans and specifications submitted to the enforcement agency for approval with this building permit application.**
5. **I will ensure that a completed signed copy of this Certificate of Compliance shall be made available with the building permit(s) issued for the building, and made available to the enforcement agency for all applicable inspections. I understand that a completed signed copy of this Certificate of Compliance is required to be included with the documentation the builder provides to the building owner at occupancy.**

Responsible Designer Name:	Jia Hui Pan	Responsible Designer Signature:	
Company :	JHP Engineering and Design Services, Inc.	Date Signed:	2022-03-19
Address:	3103 Independence Drive,	License:	M35374
City/State/Zip:	Livermore, CA 94551	Phone:	925-409-2508

Add Responsible Person | Remove Last

Alameda County
Dept. of Environmental Health
Approved By: T. Tran

CO-AR DESIGN, INC.
680 Brea Canyon Rd., Ste. 178
Diamond Bar, CA 91789

Office: 909-598-0186
http:\\www.coardesign.com

Dennis J. Lee, Architect
dennisl@coardesign.com

THESE DRAWINGS ARE THE PROPERTY OF THE ARCHITECT. THE DESIGNS SHOWN AND DESCRIBED HERIN INCLUDING ALL TECHNICAL DRAWINGS ARE PROPRIETARY AND CANNOT BE COPIED, DUPLICATED OR COMMERCIALLY EXPLOITED, IN WHOLE OR IN PART. THE DRAWINGS AND SPECIFICATIONS SHALL NOT BE USED BY THE OWNER ON OTHER PROJECTS, FOR ADDITIONS TO THIS PROJECT, OR FOR COMPLETION OF THIS PROJECT BY OTHERS. THE OWNER AGREES TO HOLD HARMLESS, INDEMNIFY AND DEFEND THE ARCHITECT AGAINST ALL DAMAGES, CLAIMS AND LOSSES, INCLUDING DEFENSE COSTS, ARISING OUT OF ANY REUSE OF THE PLANS AND SPECIFICATIONS WITHOUT THE WRITTEN AUTHORIZATION OF THE ARCHITECT OF RECORD.

COPYRIGHT © 2022 CO-AR DESIGN, INC., ALL RIGHTS RESERVED.

SEAL

NOTES

JHP Engineering and Design Services Inc.
3103 Independence Drive
Livermore, CA 94551
TEL: 925-409-2508
CEL: 510-468-0613
FAX: 510-788-6039

PROJECT
SALTALK FREMONT KITCHEN TENANT IMPROVEMENT

42550 ALBRAE ST.,
FREMONT, CA 94538

CLIENT
SALTALK, INC.
3334 VICTOR CT.,
SANTA CLARA, CA 95054

SUBMITTALS/ REVISIONS

1	HEALTH/USD SUBMITTAL	04/01/2022
2	2ND BLD. SUBMITTAL	07/22/2022
3	3RD BLD. SUBMITTAL	08/30/2022
4	3RD USD. SUBMITTAL	09/01/2022
5	2ND HEALTH SUBMITTAL	09/29/2022

PROJECT NO	21127
SCALE:	AS SHOWN
DATE	2/10/2022
DRAWN BY	TL / YC
CHECKED BY	JP

SHEET TITLE
MECHANICAL PRESCRIPTIVE TITLE 24 COMPLIANCE

SHEET NO
M-5.2

BIMcloud: COAR-CONFERENCE - BIMcloud Basic for ARCHICAD 25/202201-Fremont-Ghost Kitchen Thursday, February 10, 2022 1:47 PM

GENERAL NOTES

1. CONTRACTOR SHALL VISIT JOB SITE TO VERIFY FIELD CONDITION AGAINST CONSTRUCTION PLAN AND SPECIFICATION, IDENTIFY POSSIBLE CONFLICT AND DISCREPANCY BETWEEN PLAN AND SITE CONDITION, AND BRING TO OWNER'S AND ENGINEER'S ATTENTION PRIOR TO ENTER CONTRACT.
2. SUBMISSION OF A CONTRACT SHALL BE CONSTRUCTED AS EVIDENCE THAT A CAREFUL EXAMINATION OF THE PORTION OF THE EXISTING BUILDING, EQUIPMENT, SYSTEMS, SITE CONSTRAINTS, ETC. WHICH MAY AFFECT THE ASSOCIATED WORK SCOPE UNDER THIS CONTRACT, AND THE ACCESS TO SUCH SPACES, HAVE ALL BEEN MADE AND THAT THE CONTRACTOR IS FULL AWARE OF WITH EXISTING CONDITIONS AND DIFFICULTIES THAT WILL AFFECT THE EXECUTION OF WORK. LATER CLAIMS SHALL NOT BE MADE FOR LABOR, EQUIPMENT, OR MATERIAL REQUIRED BECAUSE OF DIFFICULTIES ENCOUNTERED WHICH COULD HAVE BEEN FORESEEN DURING SUCH EXAMINATIONS.
3. BY ENTERING CONTACT OF CONSTRUCTION, WHETHER IT IS SHOWN OR NOT SHOWN ON THIS PLAN, CONTRACTOR IS FULLY RESPONSIBLE TO COMPLETE WORK WITH MEETING ALL APPLICABLE CODES, LAWS, AND REGULATIONS GOVERNING ANY PORTION OF THE WORK SCOPE ON PLAN AND SPECIFICATIONS. PRIOR TO SUBMITTING A PROPOSAL, CONTRACTOR SHALL FULLY UNDERSTAND AND COVER ALL COSTS WORK SCOPE AND MATERIALS TO MEET ALL APPLICABLE CODES, LAWS, AND REGULATIONS. ANY WORK DONE BY THE CONTRACTOR CAUSING SUCH VIOLATION SHALL BE CORRECTED BY THE CONTRACTOR.
4. CONTRACTOR IS TO REVIEW PLANS OF OTHER DISCIPLINES AND COORDINATE WITH THE WORK OF OTHER TRADES PRIOR TO INSTALLATION TO AVOID ANY CONFLICT. NO COST SHALL BE INCURRED ON CONSTRUCTIBILITY ISSUE DUE TO LACK OF COORDINATION.
5. ALL WORK SHOWN ON PLAN ARE DIAGRAMMATIC AND INDICATE GENERAL ARRANGEMENT OF SYSTEM AND WORK. INFORMATION ON PLAN SHALL NOT BE USED TO DETERMINE EXACT LOCATION OF INSTALLATION. WHERE INSTALLATION REQUIRES EXACT MEASUREMENTS AND COORDINATION WITH WORKS OF OTHER TRADE, CONTRACTOR SHALL PREFORM ALL REQUIRED WORK AND PROVIDE SHOP DRAWINGS FOR REVIEW AND APPROVAL PRIOR TO INSTALLATION. THE CONTACTOR SHALL ALLOW IN HIS PRICE FOR WORK DONE WITH DEVIATIONS IN LOCATION AND METHOD TO AVOID OBSTRUCTIONS AND CONFLICT OF OTHER TRADES AND EXISTING UTILIZES OF BASE BUILDING.
6. CONTRACTOR SHALL SUBMIT SPECIFICATIONS OF ALL THE MATERIALS AND EQUIPMENT TO BE USED ALONG WITH SHOP DRAWING WHERE REQUIRES IN SPECIFICATION FOR APPROVAL PRIOR TO ORDER.
7. ALL NEW WORK CONNECTING TO EXISTING BASE BUILDING UTILITIES SHALL BE FULLY COORDINATED WITH REPRESENTATIVE OF OWNERSHIP TO RESULT MINIMUM INTERFERENCE TO EXISTING FACILITIES. TEMPORARY UTILITY SHUT-DOWN TO EXISTING BUILDING SERVICE SHALL BE APPROVED BY OWNERSHIP WITH WRITTEN CONSENT OF BUILDING OWNER AND SHALL INCURRED NO ADDITIONAL CHARGES. FOLLOW ALL REQUIRED CLEANING PROCEDURES AND CONNECTION REQUIREMENT PRIOR TO ESTABLISH SERVICE AFTER CONNECTION. WHERE CONTINUOUS OPERATION OF EXISTING BUILDING SERVICES ARE REQUIRED, PROVIDE WORKMANSHIP AND MATERIAL FOR ISOLATION BETWEEN BUILDING AND PROJECT SPACE, RESTORE BUILDING SERVICE IMMEDIATELY WITH MAINTAINING ORIGINAL OPERATING CONDITION.
8. CONTRACTOR SHALL STORE ALL EQUIPMENT AND MATERIAL IN A ORGANIZED AND CLEANED SPACE AT ALL TIME TO PREVENT FROM DAMAGING AND DETERIORATION PRIOR TO INSTALLATION. CONTRACTOR SHALL KEEP ALL PART OF THE CONSTRUCTION AREA AND ASSOCIATED ACCESSES CLEAN AND FREE OF DEBRIS RESULTING FROM EXECUTION OF WORK.
9. ALL LOCATION OF EXISTING UTILITIES ARE SHOWN BASED ON RECORD DRAWING OR INFORMATION PROVIDED BY SURVEYOR OR BASE BUILDING. CONTRACTOR IS RESPONSIBLE TO VERIFY EXACT LOCATION, SIZE, CONDITION, MATERIAL, AND INVERT AS APPLICABLE TO CONFIRM CONSTRUCTABILITY PRIOR TO INSTALL.
10. ALL EQUIPMENT INSTALLED SHALL BE PROVIDED WITH ACCESS AND CLEARANCES MEETING CODE REQUIREMENT AND REQUIREMENTS OF FACTORY INSTALLATION GUIDELINES FOR MAINTENANCE. WHERE ACCESS SHALL BE PROVIDED FOR OPERATION, INSPECTION, TESTING, BALANCING, MAINTENANCE, OR CODE COMPLIANCE, WHETHER SHOWN ON NOT SHOWN ON ARCHITECTURAL PLAN, CONTRACTOR SHALL COORDINATE WITH GENERAL CONTRACTOR FOR PROVISION OF SUCH ACCESS.
11. ANY INVASIVE CONSTRUCTION, SUCH AS CORE-DRILLING, CUTTING, BORING, OPENING, TO EXISTING BUILDING FLOOR OR WALL, STRUCTURAL OR NON-STRUCTURAL RELATED, SHALL BE SUBJECTED TO WRITTEN APPROVAL BY REPRESENTATIVE OR OWNERSHIP OF BASE BUILDING. WHERE REQUIRED BY OWNER, PROVIDE SHOP DRAWING WITH DETAILED MEANS AND METHODS WITH DIMENSIONAL RESULTS OF X-RAY SCANNING AS EVIDENCE TO ENSURE NO DAMAGE WILL CAUSE TO EXISTING BUILDING STRUCTURE OR UTILITY PRIOR TO PERFORM SUCH WORK. NO CONSTRUCTION SHALL BE DONE IN RESULTING OF ANY DAMAGING OR DERATING OF BUILDING STRUCTURE INTEGRITY AND UTILITY SERVICEABILITY.
12. ANY OPENING MADE TO EXISTING BUILDING SHALL BE SUPPORTED, PATCHED, AND SEALED TO MEET ALL SPECIFICATION OF ORIGINAL CONSTRUCTION. ALL PENETRATION TO RATED ASSEMBLY SHALL BE PROTECTED BY UL LISTED FIRM AND/OR SMOKE PROTECTION ASSEMBLY TO MAINTAIN ORIGINAL ASSEMBLY FIRE AND SMOKE RATING.
13. CONTRACTOR SHALL PROVIDE INSURANCE POLICY IN ACCORDANCE TO BUILDING OWNER'S AND PROJECT OWNER'S REQUIREMENTS INCLUDING A HOLD HARMLESS CAUSE FOR OWNER AND ENGINEER ON RECORD.
14. FOR THE USE OF EQUIPMENT OR MATERIAL THAT ARE DIFFERENT FROM SCHEDULES OR SPECIFICATIONS, CONTRACTOR IS RESPONSIBLE TO PROVIDE, INCLUDING BUT NOT LIMITED TO, SPECIFICATION, CALCULATION, ENGINEERING, COST DIFFERENCE, ETC. FOR APPROVAL OF EQUAL AND OWNER'S APPROVAL.
15. ALL WORK DONE SHALL BE GUARANTEED FOR A PERIOD OF TWO YEARS FROM DATE OF ACCEPTANCE OF WORK.
16. PRIOR TO FINAL ACCEPTANCE BY OWNER OR REPRESENTATIVE OF OWNER, CONTRACTOR IS RESPONSIBLE TO TEST, ADJUST, AND BALANCE ALL ASSOCIATED EQUIPMENT AND SYSTEM WITHIN SCOPE WITH PROVISIONS OF REPORTS WHERE REQUIRED IN SPECIFICATIONS TO ENSURE THAT ALL REQUIREMENTS OF PLANS AND SPECIFICATIONS ARE FULLY MET AND ALL APPLICABLE CODES, LAWS, AND REGULATIONS ARE FULLY COMPLIED.

PLUMBING GENERAL NOTES

1. PROVIDE ISOLATED COUPLINGS AND/OR UNIONS AT POINTS OF CONNECTION BETWEEN COPPER, STEEL AND BRASS PIPING.
2. ALL WATER PIPING SYSTEMS AND DRAINAGE PIPING SYSTEMS, INCLUDING SUPPLY, WASTE AND DRAIN SHALL BE INSTALLED WITH VIBRATION ISOLATORS AND SHALL BE ISOLATED FROM ANY STRUCTURAL MEMBERS, WALL SECTIONS OR OTHER MATERIALS THAT COULD TRANSMIT SOUND TO THE OCCUPIED AREAS. ALL HANGERS, STRAPS, BRACKETS, AND SUPPORTS SHALL HAVE ACOUSTICAL COMPONENTS OR COMPONENTS OF NEOPRENE AND PLASTIC FOAM BY TECH SPECIALTIES, DIVISION OF SPECIALTY PRODUCTS CO. TO ISOLATE COMPLETE PIPE CONTACT AREA. ALL ISOLATION MATERIAL SHALL HAVE A MINIMUM THICKNESS OF 1/2". INSTALL ALL COMPONENTS AS PER MANUFACTURER'S INSTRUCTIONS.
3. INSTALL ALL CLEAN-OUTS WHERE REQUIRED BY ORDINANCES, AT ENDS OF HOUSE DRAINS, AT ALL CHANGES IN DIRECTIONS, IN ALL STRAIGHT RUNS AT 100 FOOT INTERVALS, WHERE HORIZONTAL MAINS CHANGE SIZE, AND AT ALL ENDS OF ALL BRANCH PIPES WHICH ARE 5' OR OVER IN LENGTH.
4. PLUMBING FIXTURES SHALL BE COMPLETED WITH ALL ACCESSORIES REQUIRED FOR A COMPLETE INSTALLATION.
5. SELECTION OF FAUCETS AND FITTINGS SHALL AVOID THE TYPE WITH POTENTIAL FOR LEAD CONTAMINATION.
6. INSTALL STOP VALVES ON HOT AND COLD WATER SUPPLIES TO EACH FIXTURE.
7. ALL FLOOR DRAIN MUST HAVE 1/2" COLD WATER LINE CONNECTED TO TRAP PRIMER. ALL UNDERGROUND COLD WATER LINE SHALL BE ASTM TYPE-K HARD DRAWN COOPER INSTALLED WITH CONTINUOUS SLOPE TOWARD FLOOR DRAIN.
8. MATERIALS, METHODS AND LOCATIONS OF SERVICE MAINS CONNECTING THE NEW CONSTRUCTION TO ALL NEW AND EXISTING SERVICES SHALL BE IN STRICT ACCORDANCE WITH RULES, REGULATIONS, CODES AND REQUIREMENTS OF ALL AGENCIES HAVING JURISDICTION OVER THIS INSTALLATION. LOCATE ALL EXISTING STUBS TO BE CONNECTED TO IN THIS CONTRACT BEFORE WORK IS STARTED. COORDINATE LOCATION OF WATER AND SEWER CONNECTIONS WITH BUILDING ENGINEER.
9. CAULK AIRTIGHT ALL PLUMBING PENETRATIONS IN SOUND RATED WALLS AND FLOOR/CEILINGS. SEAL PENETRATIONS OF CONCRETE FLOORS WITH CEMENT GROUT. MINIMIZE PENETRATIONS THROUGH SOUND RATED CONSTRUCTION.
10. CONTRACTOR SHALL INSTALL ALL PLUMBING FIXTURES AND TRIM AS SHOWN ON THE ARCHITECTURAL PLANS. ROUGH-IN FOR ALL FIXTURES SHALL BE EXACTLY TO MEASUREMENTS FURNISHED BY FIXTURE MANUFACTURER. ALL EXPOSED PARTS TO BE CHROMIUM PLATED UNLESS SPECIFIED OTHERWISE.
11. KEEP ROUGH-IN CUTS WITHIN THE PLATE LINES AND DO NOT CUT COMPLETELY THROUGH PLATES IN SOUND-RATED WALLS. DRILL OR SAW NEAT ROUND HOLES FOR ALL PIPING. SIZE APPROXIMATELY ½ INCH LARGER THAN THE PIPE DIAMETER.
12. PIPE LINES SHALL BE INSTALLED FREE FROM TRAPS AND AIR POCKETS AND TRUE TO LINE AND GRADE WITH SUITABLE SUPPORTS PROPERLY SPACED. PIPING SHALL BE INSTALLED WITHOUT UNDUE STRESSES AND WITH PROVISION FOR EXPANSION AND CONTRACTIONS.

PLUMBING GENERAL NOTES CONT.

13. HORIZONTAL LINES SHALL HAVE HANGERS OR SUPPORTS SPACED AS FOLLOWS:
    A. CAST IRON PIPE - 5' CENTERS
    B. STEEL PIPE - 10' CENTERS
    C. COOPER TUBING - 5' CENTERS FOR 1-1/2" AND SMALLER, 10' CENTERS FOR 2" AND LARGER
14. PIPING SHALL BE NEW AND FREE FROM FOREIGN SUBSTANCES. REAM OUT ALL BURRS FORMED IN CUTTING PIPE. THREADS SHALL BE CUT ACCURATELY AND NOT OVER TWO THREADS SHALL SHOW BEYOND THE FITTING. FRICTION WRENCHES SHALL BE USED WITH PLATED POLISHED, OR SOFT METAL PIPING.
15. CHANGES IN PIPE SIZE SHALL BE MADE WITH REDUCING FITTINGS, AND BUSHING WILL NOT BE PERMITTED.
16. UNION CONNECTION SHALL BE INSTALLED DOWNSTREAM OF ALL VALVES, AT ALL EQUIPMENT CONNECTIONS AND AT OTHER POINTS AS REQUIRED.
17. CUTTING OR BORING OF HOLES THROUGH STRUCTURAL MEMBERS SHALL BE DONE ONLY WHEN IT IS IMPOSSIBLE TO ROUTE PIPING IN ANOTHER MANNER. IF CUTTING OR BORING IS NECESSARY IT SHALL BE ACCOMPLISHED ONLY BY WRITTEN APPROVAL FROM THE ARCHITECT, STRUCTURAL AND BUILDING ENGINEER, AND ALSO INCLUDED IN HIS BIDS. WORK SHALL COMPLY WITH CBC SECTIONS 2320A.8.3 AND 2320A.11.10.
18. DO NOT ALLOW THE PIPING, VALVES OR CONNECTORS TO FORM A RIGID CONNECTION WITH THE STRUCTURE OR OTHER PIPES. INSTALL PIPING TO ALLOW FOR EXPANSION AND CONTRACTION WITHOUT STRESSING PIPE, JOINTS OR CONNECTED EQUIPMENT.
19. PROVIDE SIOUX CHIEF WATER HAMMER ARRESTER FOR EACH PLUMBING FIXTURE BANK AND 18" HIGH AIR CHAMBER FOR EACH PLUMBING FIXTURE. SIZE OF WATER HAMMER ARRESTER SHALL BE SUFFICIENT TO HANDLE THE REQUIRED FIXTURE UNIT AT EACH BANK.
20. THE DOMESTIC WATER SUPPLY AND DISTRIBUTION SYSTEM WITHIN THE AREA OF WORK SHALL BE STERILIZED WITH CHLORINE IN SOLUTION IN ACCORDANCE WITH AMERICAN WATER WORKS ASSOCIATION PUBLICATION C-601-1954.
21. PRESSURE TEST ENTIRE HOT AND COLD PIPING AND DRAINAGE SYSTEM FROM CAPPED CONNECTIONS, TO AND INCLUDING VENTS.
22. HOT WATER PIPING TO BE INSULATED PER CODE.
23. PROVIDE ACCESS PANEL FOR ALL STUB OUTS ENDED INSIDE CEILING OR WALL.
24. THREADED FITTINGS: ANSI/ASME B16.3 BLACK MALLEABLE IRON.
25. SOCKET-WELDING FITTINGS: ANSI B16.11 FORGED STEEL.
26. BUTT-WELDING FITTINGS: ANSI/ASME B16.9 WROUGHT STEEL WITH BACKING RINGS OF COMPATIBLE MATERIAL.
27. UNIONS: ASME/ANSI B16.39 BLACK MALLEABLE IRON.
28. FLANGES AND FLANGED FITTINGS: ASME/ANSI B16.5 STEEL FLANGES OR CONVOLUTED STEEL FLANGES. FLANGE FACES SHALL HAVE INTEGRAL GROOVES OF RECTANGULAR CROSS SECTION WHICH AFFORD CONTAINMENT FOR SELF-ENERGIZING GASKET MATERIAL.
29. THREADED JOINTS: WHERE POSSIBLE USE PIPE WITH FACTORY-CUT THREADS, OTHERWISE CUT PIPE LENGTHS ACCORDINGLY WITH ANSI/ASME B1.20.1. PROVIDE THREADS SMOOTH, CLEAN, AND FULL-CUT. APPLY ANTI-SEIZE PASTE OR TAPE TO MALE THREADS PORTION. WORK PIPING INTO PLACE WITHOUT SPRINGING OR FORCING. BACKING OFF TO PERMIT ALIGNMENT OF THREADED JOINTS WILL NOT BE PERMITTED. ENGAGE THREADS SO THAT NOT MORE THAN TWO THREADS REMAIN EXPOSED. USE UNIONS FOR CONNECTIONS TO VALVES, METERS FOR WHICH A MEANS OF DISCONNECTION IS NOT OTHERWISE PROVIDED.
30. WELDED JOINTS: WELD BY THE SHIELDED METAL-ARC PROCESS, USING COVERED ELECTRODES AND IN ACCORDANCE WITH PROCEDURES ESTABLISHED AND QUALIFIED IN ACCORDANCE WITH ASME B31.8. SOLDER IN ACCORDANCE WITH ASTM B32 SHALL BE APPLIED TO THE JOINT SURFACES UNTIL CAPILLARY ACTION DRAWS THE MOLTEN SOLDER INTO THE CAP. SOLDER AND FLUXES WITH A LEAD CONTENT THAT EXCEEDS 0.2 PERCENT SHALL BE PROHIBITED IN PIPING SYSTEM CONVEYING POTABLE WATER.
31. FLANGED JOINTS: USE FLANGED JOINTS FOR CONNECTING WELDED JOINT PIPE AND FITTINGS TO VALVES TO PROVIDE FOR DISCONNECTION. INSTALL JOINTS SO THAT FLANGE FACES BEAR UNIFORMLY ON GASKETS. ENGAGE BOLTS SO THAT THERE IF COMPLETE THREADING THROUGH THE NUTS AND TIGHTEN SO THAT BOLTS ARE UNIFORMLY STRESSED AND EQUALLY TORQUE.
32. USE TEST PRESSURE OF 50 PSIG. DO NOT TEST UNTIL EVERY JOINT HAS SET AND COOLED AT LEAST 8 HOURS AT TEMPERATURES ABOVE 50 DEGREES F. TEST PIPING SYSTEM FOR AT LEAST 4 HOURS WITHOUT PRESSURE LOSS OR VISIBLE LEAKS.
33. PLUMBING FIXTURE CONNECTION SIZE: SEE PLAN.
34. ALL HOT WATER PIPE SHALL BE INSULATED WITH INSULATION PER 2019 TITLE 24 STANDARD. MINIMUM 1"-THICK INSULATION FOR PIPE LESS THAN 1"Ø AND MINIMUM 1½"-THICK INSULATION FOR PIPE LARGER THAN OR EQUAL TO 1"Ø.
35. PRESSURE PIPING AND FITTING:
    A. DOMESTIC COLD AND HOT WATER (ABOVE GRADE): HARD DRAWN DEOXIDIZED WATER SERVICE TUBING CONFORMING TO ASTM B88, TYPE "L". PROVIDE 125 PSI FLANGE AT CHANGE OF MATERIAL LOCATIONS.
    B. DOMESTIC COLD AND HOT WATER (BELOW GRADE): HARD DRAWN DEOXIDIZED WATER SERVICE TUBING CONFORMING TO ASTM B88, TYPE TYPE "K".
    C. FITTINGS FOR COPPER WATER TUBING: ANSI B16.22 WROUGHT COPPER SOLDER-JOINT FITTING.
    D. TRAP PRIMER PIPING (UNDERGROUND): HARD DRAWN DEOXIDIZED WATER SERVICE TUBING CONFORMING TO ASTM B88, TYPE "K", WROUGHT COPPER FITTING AND BRAZED JOINT.
    E. HARRIS, ENGELHARD, OR EQUAL, BCUP FILLER MATERIAL FOR BRAZING OF COPPER FITTING JOINTS. BRAZE JOINTS FOR COLD WATER PIPING 2-1/2" AND LARGER. BRAZE JOINTS FOR HOT WATER PIPING 2-1/2" AND LARGER.
36. SANITARY AND GREASE DRAINAGE PIPING AND FITTING:
    A. CAST IRON SOIL PIPE AND FITTINGS (ABOVE FLOOR): REQUIRED CISPI 301 & 310 WHICH COMPLIANCE WITH HUD UM 77A CAST IRON HUBLESS SOIL PIPE AND FITTING. ALL PIPE AND FITTINGS SHALL BE MARKED WITH CISPI'S COLLECTIVE TRADEMARK OR RECEIVE PRIOR APPROVAL BE THE ENGINEER OF RECORD. JOINTS FOR HUBLESS PIPE AND FITTINGS: CISPI 310 AND SHALL CONFORM TO THE MANUFACTURER'S INSTALLATION INSTRUCTIONS AND LOCAL CODE REQUIREMENTS. ANACO "HUSKY SD 4000, CLAMP-ALL 125, TYLER WB, MG COUPLINGS, OR EQUAL, COMPLY WITH FM 1680, CLASS 1.
    B. CAST IRON SOIL PIPE AND FITTINGS (BELOW SLAB): ASTM A74 STANDARD WEIGHT HUB AND SPIGOT PIPING AND FITTING. ALL PIPE AND FITTINGS SHALL BE MARKED WITH CISPI'S COLLECTIVE TRADEMARK OR RECEIVE PRIOR APPROVAL BE THE ENGINEER OF RECORD. JOINT FOR HUB AND SPIGOT PIPE AND FITTINGS: ASTM C-564 COMPRESSION GASKETS OR SHALL BE INSTALLED WITH LEAD AND OAKUM.
    C. COPPER DRAINAGE PIPING AND FITTINGS (ABOVE FLOOR): ASTM B306 DWV TYPE COPPER TUBING AND ANSI B16.23 CAST BRONZE SOLDER-JOINT DRAINAGE TYPE FITTING. PROVIDE MISSION, OR EQUAL, CISPI 310 ADAPTOR COUPLING WITH NEOPRENE GASKET AND STAINLESS STEEL SHIELD WITH TWO BANDS.
    D. CONDENSATE PIPING AND FITTINGS: ASTM B88 HARD DRAWN DEOXIDIZED, TYPE M COPPER TUBING WITH ANSI B16.22 WROUGHT COPPER WYES AND LONG RADIUS SOLDER-JOINT FITTINGS.
37. NATURAL GAS PIPING AND FITTING:
    A. BELOW GRADE PIPING: SCHEDULE 40 STEEL PIPE WITH DRESSER TYPE AND STEEL WELDING FITTINGS. PRE-WRAP WITH MILL-WRAPPED CORROSION PROTECTION EXTRUDED POLYOLEFIN COATING IN ACCORDANCE WITH GAS COMPANY REQUIREMENTS. OR HIGH DENSITY POLYETHYLENE PIPING CONFORMING WITH ASTM D 2513, WITH SOCKET TYPE FITTINGS CONFORMING WITH ASTM D 2683, AND MINIMUM SDR 11. FOR 6" SIZE OR LARGER NATURAL GAS MAIN, USE BUTT FITTINGS WITH SDR 11. PROVIDE POLYETHYLENE TO SCH. 40 STEEL PIPE TRANSITION FITTING AND RISER AT EACH BUILDING PRIOR TO EXTENDING GAS PIPING ABOVE GROUND. PROVIDE 16 AWG COPPER TRACE WIRE OVER ENTIRE RUN OF PE PIPING AT 12 INCHES ABOVE PIPE.
    B. FOR ABOVE GRADE PIPING: ASTM A-53, SCHEDULE 40 BLACK STEEL PIPING WITH MALLEABLE IRON THREADED FITTING CONFORMING TO ANSI B16.3, AND SCHEDULE 40 STEEL FITTING FOR BUTT WELDING CONFORMING TO ASTM A234, OR ASME B16.9
38. ALL FIXTURES, EQUIPMENT, PIPING AND MATERIALS SHALL BE LISTED.
39. ALL FAUCETS IN PUBLIC RESTROOMS SHALL BE SELF-CLOSING OR SELF-CLOSING METERING FAUCETS.
40. PUBLIC LAVATORIES SHALL HAVE CONTROLS TO LIMIT THE WATER TEMPERATURE TO 120°F.
41. ALL NATURAL GAS COOKING EQUIPMENT SHALL BE EQUIPPED WITH QUICK DISCONNECT GAS HOSE CONNECTION AND RESTRAINING CABLE ATTACHED TO THE EQUIPMENT.
42. ALL PLUMBING FIXTURES AND FITTING SHALL MEET THE STANDARDS REFERENCED IN TABLE 1701.1 OF THE 2019 CPC CGBSC CHAPTER 6. CGBSC SECTION 5.303.6.

PLUMBING GENERAL NOTES CONT.

43. ALL CLEAN-OUTS SHALL BE INSTALLED AS PER SEC. 707.0 & 719.0 OF LATEST CPC.
44. WATER SUPPLY AND DRAIN PIPES UNDER ACCESSIBLE LAVATORIES AND SINKS SHALL BE INSULATED OR OTHERWISE BE CONFIGURED. TO PROTECT AGAINST CONTACT. PROTECTORS, INSULATORS, OR BOTH SHALL COMPLY WITH ASME A 112.18.9.
45. ALL HOSE BIBBS AND FAUCETS CONNECTED TO NON-POTABLE WATER LINES SHALL BE POSTED "CAUTION: NON-POTABLE WATER, DO NOT DRINK".
46. ALL NEW POTABLE WATER SYSTEMS SHALL BE DISINFECTED PRIOR TO USE ACCORDING TO SECTION 609.9(1-3) OF THE LATEST PLUMBING CODE.

DRAWING INDEX

P-0.1	GENERAL NOTES, INDEX, SCOPE OF WORK, CODES, SYMBOLS, LEGENDS
P-0.2	SCHEDULES, CALCULATIONS, AND TABLES
P-0.3	PLUMBING DETAILS
P-0.4	PLUMBING DETAILS
P-0.5	WATER HEATER TITLE 24 COMPLIANCE
P-1.0	GROUND FLOOR DOMESTIC WATER PIPING PLAN
P-1.1	GROUND FLOOR DOMESTIC WATER PIPING PLAN- AREA A
P-1.2	GROUND FLOOR DOMESTIC WATER PIPING PLAN- AREA B
P-2.0	GROUND FLOOR WASTE AND VENT PIPING PLAN
P-2.1	GROUND FLOOR WASTE AND VENT PIPING PLAN- AREA A
P-2.2	GROUND FLOOR WASTE AND VENT PIPING PLAN- AREA B
P-3.0	GROUND FLOOR NATURAL GAS AND CONDENSATE WATER PIPING PLAN
P-3.1	GROUND FLOOR NATURAL GAS AND CONDENSATE WATER PIPING PLAN-AREA A
P-3.2	GROUND FLOOR NATURAL GAS AND CONDENSATE WATER PIPING PLAN-AREA B
P-4.0	PLUMBING ROOF PIPING PLAN- AREA A
P-4.1	PLUMBING ROOF PIPING PLAN- AREA B
P-5.0	GAS PLUMBING ISOMETRIC DIAGRAM (1)

SCOPE OF WORK

- FURNISH AND INSTALL NATURAL GAS PIPING SYSTEM AND ALL OTHER ASSOCIATED COMPONENTS PER PLAN.
- FURNISH AND INSTALL PLUMBING FIXTURES AND ASSOCIATED COMPONENTS PER PLAN.
- FURNISH AND INSTALL NEW DOMESTIC WATER PIPING SYSTEM WITH ALL OTHER ASSOCIATED COMPONENTS PER PLAN.
- FURNISH AND INSTALL NEW WASTE, GREASE WASTE, AND VENT SYSTEM WITH ALL OTHER ASSOCIATED COMPONENT PER PLAN.
- FURNISH AND INSTALL NEW CONDENSATE PIPING SYSTEM WITH ALL OTHER ASSOCIATED COMPONENT PER PLAN.

APPLICABLE CODE

2019 CALIFORNIA BUILDING CODE
2019 CALIFORNIA MECHANICAL CODE
2019 CALIFORNIA PLUMBING CODE
2019 CALIFORNIA ENERGY CODE
2019 CALIFORNIA FIRE CODE
2019 NFPA 13
ALL AMENDMENTS AND SUPPLEMENTS TO ABOVE CODES
ALL CITY OF FREMONT ORDINANCES AND AMENDMENTS TO ABOVE CODES
ALL COUNTY OF ALAMEDA ORDINANCES AND AMENDMENTS TO ABOVE CODES

Alameda County
Dept. of Environmental Health
Approved By: T. Tran

LEGENDS, SYMBOLS AND ABBREVIATIONS

SYMBOL		DESCRIPTION
UP / LO		EQUIPMENT TYPE / EQUIPMENT NUMBER
0 / M-?		DETAIL DRAWING NUMBER / DETAIL DRAWING PAGE
	POC	POINT OF CONNECTION
	POD	POINT OF DISCONNECT
•	--	PLUMBING FIXTURE CONNECTION
=	CO	CLEAN OUT
	DN.	PIPE DOWN
	UP	PIPE UP
>	--	FLOW DIRECTION
	TP	TRAP PRIMER W/ WALL ACCESS PANEL
	SOV	SHUT-OFF VALVE
	CKV	CHECK VALVE
	GCK	GAS COCK
	FD	FLOOR DRAIN
	PR	PIPE REDUCER
	WCO	WALL CLEAN-OUT
	FCO	FLOOR CLEAN-OUT
	BDV	STRAINER WITH BLOWDOWN VALVE
	PRV	DOMESTIC COLD WATER PRESSURE REDUCING VALVE
	PR	NATURAL GAS PRESSURE REGULATOR

LINE TYPE	ABBREV.	DESCRIPTION
	(D)	PIPE TO BE REMOVED
	(E)	EXISTING PIPE TO REMAIN
— G —	G.	NATURAL GAS
—HWS—	HWS	HOT WATER SUPPLY
—CW—	CW	COLD WATER SUPPLY
—FW—	FW	FILTER WATER
	SW	SANITARY WASTE
	GW	GREASE WASTE
	V	VENT PIPE
— CD—	CD	CONDENSATE DRAIN

ABBR.	DESCRIPTION	ABBR.	DESCRIPTION
AFF	ABOVE FINISHED FLOOR	ICS	IN CEILING SPACE
		INS	INSULATION (THERMAL)
B.G.	BELOW GRADE	MA	MAKE-UP AIR
BLDG	BUILDING		
BSMT	BASEMENT	NIC	NOT IN CONTRACT
CFF	CAP FOR FUTURE	OSA	OUTSIDE AIR (FRESH AIR)
CLG	CEILING		
CSD	CEILING SUPPLY DIFFUSER	POC	POINT OF CONNECTION
EA	EXHAUST AIR	RA	RETURN AIR
DN	DOWN	SA	SUPPLY AIR
		SAD	SEE ARCHITECTURAL DRAWING
FA	FRESH AIR	SOV	SHUT-OFF VALVE
FL	FLOOR	SRR	SIDEWALL RETURN REGISTER
FR	FROM	UTR	UP THROUGH ROOF
FR	FROM	U.G.	UNDERGROUND/BELOW GRADE
GE	GREASE EXHAUST	VTF	VENT THROUGH ROOF
KEA	KITCHEN EXHAUST AIR		

CO-AR DESIGN, INC.
680 Brea Canyon Rd., Ste. 178
Diamond Bar, CA 91789

Office: 909-598-0186
http:\\www.coardesign.com

Dennis J. Lee, Architect
dennisl@coardesign.com

THESE DRAWINGS ARE THE PROPERTY OF THE ARCHITECT. THE DESIGNS SHOWN AND DESCRIBED HERIN INCLUDING ALL TECHNICAL DRAWINGS ARE PROPRIETARY AND CANNOT BE COPIED, DUPLICATED OR COMMERCIALLY EXPLOITED, IN WHOLE OR IN PART. THE DRAWINGS AND SPECIFICATIONS SHALL NOT BE USED BY THE OWNER ON OTHER PROJECTS, FOR ADDITIONS TO THIS PROJECT, OR FOR COMPLETION OF THIS PROJECT BY OTHERS. THE OWNER AGREES TO HOLD HARMLESS, INDEMNIFY AND DEFEND THE ARCHITECT AGAINST ALL DAMAGES, CLAIMS AND LOSSES, INCLUDING DEFENSE COSTS, ARISING OUT OF ANY REUSE OF THE PLANS AND SPECIFICATIONS WITHOUT THE WRITTEN AUTHORIZATION OF THE ARCHITECT OF RECORD.

COPYRIGHT © 2022 CO-AR DESIGN, INC., ALL RIGHTS RESERVED.

SEAL

REGISTERED PROFESSIONAL ENGINEER
JIA HUI PAN
M35374
EXP. 6/30/23
MECHANICAL
STATE OF CALIFORNIA

NOTES

JHP Engineering and Design Services Inc.
3103 Independence Drive
Livermore, CA 94551
TEL: 925-409-2508
CEL: 510-468-0613
FAX: 510-788-6039

PROJECT
SALTALK FREMONT KITCHEN TENANT IMPROVEMENT

42550 ALBRAE ST.,
FREMONT, CA 94538

CLIENT

SALTALK, INC.
3334 VICTOR CT.,
SANTA CLARA, CA 95054

SUBMITTALS/ REVISIONS

1	HEALTH/USD SUBMITTAL	04/01/2022
2	2ND BLD. SUBMITTAL (1)	07/22/2022
3	3RD BLD. SUBMITTAL	08/30/2022
4	3RD USD. SUBMITTAL	09/01/2022
5	2ND HEALTH SUBMITTAL	09/29/2022

PROJECT NO:	21127
SCALE:	AS SHOWN
DATE:	2/10/2022
DRAWN BY	TL / YC
CHECKED BY	JP

SHEET TITLE
GENERAL INFORMATION

SHEET NO
P-0.1

BIMcloud: COAR CONFERENCE - BIMcloud Basic for ARCHICAD 25/202201 Fremont Ghost Kitchen Thursday, February 10, 2022 1:47 PM

PLUMBING EQUIPMENT SCHEDULES

PLUMBING FIXTURE SCHEDULE*

TAG	FIXTURE	DESCRIPTION
WC (ADA)	WATER CLOSET, ADA	TOTO WALL-MOUNTED FLUSHOMETER TOILET. MODEL: CT708EVG. 1.28-GPF ECOPOWER (TET2LA31#SS) FLUSH VALVE, ADA COMPLIANT, COMPLETE WITH 1½' BACK SPUD INLET, LESS SEAT WITH CEFIONTECT CERMIC GLAZE, AND WALL MOUNT CARRIER.
UR (ADA)	URINAL, ADA	TOTO HIGH EFFICIENCY WASHOUT URINAL. MODEL: UT105UVG. 0.125-GPF ECOPOWER (TEU2UA11#SS) FLUSH VALVE, ADA COMPLIANT, COMPLETE WITH ¾" BACK SPUD INLET AND CEFIONTECT, AND WALL MOUNT CARRIER.
LAV (ADA)	LAVATORY, ADA	TOTO UNDER-COUNTER LAVATORY. MODEL: LT191G. 20½"X12⅜" VITREOUS CHINA WITH CEFIONTECT GLAZING. CONFIRM COLOR AND FINISH WITH ARCHITECT/OWNER PRIOR TO ORDER. ADA COMPLIANT. COMPLETE WITH TOTO LIBELLA ECOPOWER FAUCET. MODEL: TEL1A5-D10ET. LIBELLA SPOUT (TELS1A5), 0.09 GPC CONTROLLER (TELC105-D10E), AND THERMOSTATIC MIXING VALVE (TLT10R). POLISHED CHROME FINISH. ALSO REPLACE MANUFACTURER AERATOR W/ T&S LEAD FREE 0.4 GPM FLOW CONTROL AERATOR. ALSO COMPLETE WITH TOTO SENSOR OPERATED SOAP DISPENSER. MODEL: TES100AA-AC POWERED.
FD	FLOOR DRAIN	ZURN MODEL FD2290 ADJUSTABLE FLOOR DRAIN. CAST IRON BODY, NO-HUB, CHROME PLATED STRAINER, ½" TRAP PRIMER CONNECTION.
TD	TRENCH DRAIN	FAST TRACK PRE-SLOPED TRENCH DRAIN SYSTEM. 6" WIDE AND VARIOUS LONG SECTION WITH PRE-MOLDED 2" NO-HUB BOTTOM OUTLET WITH TRAP AND ½" TAP PRIMER CONNECTION. PROVIDE DRAIN WITH 16GA 304 S.S. PERFORATED GRATING.
FS-1, FS-2	FLOOR SINK	ZURN MODEL Z1901 12"x12"X8"DEEP, 3" NO-HUB OUTLET FLOOR SINK WITH HALF GRATE AND BOTTOM DOME STRAINER.
TP	TRAP PRIMER	PRECISION PLUMBING PRODUCTS (PPP) MODEL MP-500-12V TRAP PRIMER WITH BATTERY OPERATED SOLENOID VALVE AND KEY OPERATED LOCKABLE RECESSED WALL BOX. PROVIDE DISTRIBUTION UNIT FOR VALVE SERVING MORE THAN 1 FLOOR DRAIN.

* ALL PLUMBING FIXTURES AND FITTING SHALL MEET THE STANDARDS REFERENCED IN TABLE 1701.1 OF THE 2019 CPC CGBSC CHAPTER 6. CGBSC SECTION 5.303.6.

PLUMBING EQUIPMENT SCHEDULE

TAG	DESCRIPTION
WH 01, WH 02	A.O. SMITH CONDENSING GAS WATER HEATER MODEL BTH-400, GAS INPUT 400,000 BTUH, 119 GALLON CAPACITY AND 95% THERMAL EFFICIENCY. COMPLETE WITH DRAIN PAN, FACTORY CONDENSATE NEUTRALIZATION KIT, FACTORY LISTED VENT TERMINATION CAP FOR ROOF INSTALLATION, T&P VALVE, FLEXIBLE HOSE CONNECTION, UNION FITTINGS, ISOLATION VALVES, CHECK VALVE, AMTROL AX-40V EXTROL EXPANSION TANK AND HOUSE KEEPING PAD. 115V/1Ø/60Hz POWER, DISCONNECT SWITCH AND WIRING TO WATER HEATER BY ELECTRICAL CONTRACTOR. ~~SET DISCHARGE WATER TEMPERATURE AT 120°F. PROVIDE SCHEDULED EQUIPMENT OR APPROVE EQUAL.~~ WATER HEATER(S) SHALL BE ANCHORED OR STRAPPED TO RESIST HORIZONTAL DISPLACEMENT AND ELEVATED OFF THE FLOOR AT LEAST SIX (6) INCHES ON A METAL OR EQUIVALENT STAND. THE TEMPERATURE AND PRESSURE (T&P) RELIEF VALVE FROM THE WATER HEATER(S) SHALL BE DISCHARGED TO A FLOOR SINK OR MOP SINK VIA 1-INCH AIR GAP ABOVE FIXTURE RIM. 4
CP 01, CP 02	BELL AND GOSSETT LEAD FREE (CA AB1953 COMPLIANT) RECIRCULATOR MODEL: NBF-36, 3-SPEED, ¾"Ø NPT, 5 GPM @ 25 FT. HD. 115V/1Ø/60Hz, MAX. 270 WATTS. COMPLETE WITH LEAD FREE BODY, FACTORY ADJUSTABLE AQUASTAT AND TIMER MODULE FOR PUMP CONTROL. COORDINATE WITH ELECTRICAL CONTRACTOR FOR PROVISION OF 115V/1PH POWER, DISCONNECT, AND WIRING BY ELECTRICAL CONTRACTOR.
PR --	DIAPHRAGM NATURAL GAS LINE PRESSURE REGULATOR WITH OVER PRESSURE PROTECTION DEVICE. BRAND/MODEL: MAXTROL/ 325-9L. 1½"Ø INLET AND 2"Ø OUTLET THREADED CONNECTIONS WITH NPT. MAX. 1,250 CFH, 2 PSI INLET PRESSURE AND 10" W.C. OUTLET PRESSURE. ANSI E21.80/CSA 6.22 CERTIFIED.
GM --	ELSTER AMERICAN METER (MODEL: AC-800) DIAPHRAGM NATURAL GAS METER. 800 SCFH AT ½ INCH W.C. MAX. PRESSURE 25 PSIG. ANSI B109.2 COMPLIANT AND AMI/AMR COMPATIBLE. WEIGHT 21 LB. PROVIDE METER WITH PULSE MASTER PULSE OUTPUT MODULE FOR USAGE MONITORING. ALSO PROVIDE TEHAMA WIRELESS METERING DATA TRANSCEIVER WITH DISPLAY THAT ACCEPTS PULSE DATA FROM GAS METER. INSTALL TRANSCEIVER PER FACTORY REQUIREMENTS.
WM --	ZENNER MULTI-JET TYPE MAGNETIC DRIVE COLD WATER METER 1½"Ø, METER SHALL BE LEAD FREE AND COMPLY WITH AWWA C708, CERTIFIED TO NSF/ANSI STANDARD 61 AND 372. 150 PSI WORKING PRESSURE. CONTRACTOR TO FURNISH AND INSTALL EACH METER WITH A TEHAMA WIRELESS METERING DATA TRANSCEIVER WITH DISPLAY. CONFIRM PULSE/ENCODER COMPATIBILITY WITH TEHAMA PRIOR TO ORDER. MAX. WT. = 1,850 LBS (855 BS+119 AL X 8.3 LBS/GAL.) 2
DP --	WATER SUB-METERING DATA PANEL. TEHAMA WIRELESS DATA CONCENTRATION ACCESS PANEL. MODEL: DCAP-TW-203X-T-150. DEVICE SHALL BE COMPATIBLE WITH TAHAMA TRANSCEIVER AND SHALL PROVIDE UP TO 15 METER POINTS WITH ETHERNET OR WIFI CAPABILITY FOR REMOTE DATA READING. COORDINATE WITH ELECTRICAL FOR 120V/1Ø POWER PROVISION.

GAS DEMAND CALCULATION - KITCHEN TYPE A (TYP. OF 26)

EQUIPMENT	EQUIPMENT CONNECTION SIZE	QTY	GAS INPUT (CFH)	TOTAL (CFH)
4-BURNER RANGE	¾"Ø	26	200	5,200
FRYER	¾"Ø	26	140	3,640
SOUP POT	¾"Ø	26	80	2,080
WOK RANGE	¾"Ø	26	330	8,580
TYP. KITCHEN TOTAL (CFH)			750	19,500

GAS DEMAND CALCULATION - KITCHEN TYPE B (TYP. OF 2)

EQUIPMENT	EQUIPMENT CONNECTION SIZE	QTY	GAS INPUT (CFH)	TOTAL (CFH)
4-BURNER RANGE	¾"Ø	2	200	400
FRYER	¾"Ø	2	140	280
SOUP POT	¾"Ø	2	80	160
WOK RANGE	¾"Ø	2	330	660
OVEN	¾"Ø	2	150	300
TYP. KITCHEN TOTAL (CFH)			900	1800

GAS DEMAND CALCULATION - COMMON AREA

EQUIPMENT	EQUIPMENT CONNECTION SIZE	QTY	GAS INPUT (CFH)	TOTAL (CFH)
WH-01	1½"Ø	1	400	400
WH-02	1½"Ø	1	400	400
TOTAL (CFH)				800
OVERALL TOTAL (CFH)				22,100

GAS SUPPLY SYSTEM:
(PER 2019 CPC TABLE 1215.2(1)) AND 1215.2(4)

TOTAL GAS LOAD OF (E) 2"Ø AT 2-PSI PROVIDED BY LANDLORD AT POC: 22,100-CFH AT 300 FT TDL FROM METER TO MOST REMOTE EQUIPMENT.
MIN. GAS PIPE SIZE PER 2019 CPC TABLE 1215.2 (4): 4"Ø AT 2-PSI
NEW TENANT GAS LINE SIZE FROM POC: (1) 4"Ø AT 2-PSI

NOTES:
CONNECTION SIZE SHOWN IN THIS TABLE IS NOT NECESSARY THE BRANCH PIPE SIZE TO EQUIPMENT. SEE NATURAL GAS PIPING PLAN ON PB-1.2 FOR PIPE SIZE.

PLUMBING FIXTURE UNIT (FU) CALCULATION - COMMON AREA

FIXTURE		WATER			SANITARY WASTE			GREASE WASTE		
TAG	TYPE	QTY	EACH	TOTAL	QTY	EACH	TOTAL	QTY	EACH	TOTAL
WC	WATER CLOSET	7	5.0	35.0	7	4.0	28.0	--	N/A	--
UR	URINAL	2	4.0	8.0	1	2.0	2.0	--	N/A	--
LAV	LAVATORY	6	1.0	6.0	6	1.0	6.0	--	N/A	--
TP	TRAP PRIMER	3	1.0	3.0	--	N/A	--	--	N/A	--
--	~~NOT USE~~	--	N/A	--	--	N/A	--	--	N/A	--
FS-2	FLOOR SINK	--	N/A	--	3	3.0	9.0	--	N/A	--
~~FD~~	~~FLOOR DRAIN~~	5	N/A	--	5	2.0	10.0	2	2.0	4.0
~~54~~	~~DRINKING FOUNTAIN~~	1	1.0	1.0	1	1.0	1.0	--	N/A	--
14	MOP SINK	2	3.0	6.0	--	N/A	--	2	3.0	6.0
~~11~~	~~ICE MACHINE~~	2	2.0	4.0	2	***	--	--	N/A	--
HS	HAND SINK	2	1.0	2.0	2	1.0	2.0	--	N/A	--
HB	HOSE BIBB	5	2.5	12.5	--	N/A	--	--	N/A	--
TOTAL FU		77.5			58			10.0		

PLUMBING FIXTURE UNIT (FU) CALCULATION - TYPICAL KITCHEN

FIXTURE		WATER			SANITARY WASTE			GREASE WASTE		
TAG	TYPE	QTY	EACH	TOTAL	QTY	EACH	TOTAL	QTY	EACH	TOTAL
FS-1	FLOOR SINK	--	N/A	--	--	N/A	--	1	2.0	2.0
FS-2	FLOOR SINK	--	N/A	--	--	N/A	--	2	3.0	6.0
TP	TRAP PRIMER	1	1.0	1.0	--	N/A	--	--	N/A	--
HB	HOSE BIBB	1	2.5	2.5	--	N/A	--	--	N/A	--
FD	FLOOR DRAIN	1	N/A	--	--	N/A	--	1	2.0	2.0
53	WOK RANGE FAUCET	2	1.5	3.0	--	N/A	--	--	N/A	--
9	HAND SINK	1	1.0	1.0	--	N/A	--	1	1.0	1.0
10	1-COMP SINK	1	2.0	2.0	--	N/A	--	1	***	--
8	3-COMP SINK	1	3.0	3.0	--	N/A	--	1	***	--
MAU-01	MAKE UP AIR UNIT	1	1.0	1.0	--	N/A	--	1	***	--
TOTAL FU PER KITCHEN		13.5			0			11.0		
TOTAL FU (TYP. OF 28)		378			0			308		

TOTALIZED PLUMBING FIXTURE UNIT (FU) CALCULATION

DEPARTMENT	WATER	SANITARY WASTE	GREASE WASTE
COMMON AREA	77.5	58	10
TYPICAL KITCHEN	378	0	308
EXISTING ADJACENT TENANT	50	N/A	N/A
TOTAL FU	500.5	58	318

* OWNER/GC FURNISHED AND INSTALLED EQUIPMENT; REFERENCE EQUIPMENT SCHEDULE ON ARCHITECTURAL FOR DETAIL.
** FROM WATER FILTER SYSTEMS.
*** INDIRECTLY DRAIN TO FLOOR SINK.
\# MAKE CONNECTION TO DEDICATED WATER FILTER THEN TO FIXTURE.

GREASE WASTE SYSTEM:

TOTAL FIXTURE UNITS (FU) TO NEW GREASE INTERCEPTOR → 318
TENANT MIN. GREASE INTERCEPTOR SIZE PER 2019 CPC TABLE 1014.3.6: 2,500 GALLONS
CAPACITY OF NEW GREASE INTERCEPTOR: (2)5,000 GAL. (1,152 FU > 318 FU)

WATER SUPPLY SYSTEM:
(PER 2019 CPC TABLE 610.4, 40~60 PSI)

DISTANCE TO MOST REMOTE FIXTURE = 400 FT AT 500.5 FU.
MIN. REQUIRED SIZE OF WATER METER/MAIN: 2"Ø METER/2½ "Ø MAIN
BUILDING COLD WATER MAIN: (E)2"Ø METER AND/(N)3"Ø MAIN

WASTE AND VENT SYSTEM:
(PER 2019 CPC TABLE 703.2)

MINIMUM REQUIRED SIZE OF WASTE MAIN: (1) 6"Ø GW AND (1) 4"Ø SW
PROVIDED BUILDING WASTE MAIN: (1)(N) 6"Ø GW AND (1)(E) 4"Ø SW
MINIMUM REQUIRED SIZE OF VENT PIPE: (1) 6"Ø V.
PROVIDED TENANT PLUMBING VENT: (3) 4"Ø V

PLUMBING MATERIAL SCHEDULE*

ITEM	LOCATION	SPECIFICATIONS
DOMESTIC COLD WATER PIPE	ABOVE GRADE	TYPE L COPPER. PIPE SHALL CONFORM WITH ASTM-(B42, B43, B75, B88, B135, B251, B302, B447). PIPE FITTING SHALL CONFORM WITH ASTM-(B16.15, B16.18, B16.22, B16.26, B16.50, B16.51), ASSE 1061.
DOMESTIC COLD WATER PIPE	BELOW GRADE	TYPE K COPPER. PIPE SHALL CONFORM WITH ASTM-(B42, B43, B75, B88, B135, B251, B302, B447). PIPE FITTING SHALL CONFORM WITH ASTM-(B16.15, B16.18, B16.22, B16.26, B16.50, B16.51), ASSE 1061.
SANITARY WASTE AND VENT PIPE	ABOVE GRADE	CAST IRON NO-HUB. PIPE SHALL CONFORM WITH ASTM-D2661, ASTM D2680. PIPE FITTING SHALL CONFORM WITH ASTM D2661, ASTM D2680
SANITARY WASTE AND VENT PIPE	BELOW GRADE	CAST IRON NO-HUB. PIPE SHALL CONFORM WITH ASTM-D2661, ASTM D2680. PIPE FITTING SHALL CONFORM WITH ASTM D2661, ASTM D2680
NATURAL GAS	ABOVE GRADE	BLACK STEEL SCHE. 40 PAINT WITH RUST INHIBITOR
CONDENSATE	ABOVE AND BELOW GRADE	TYPE M COPPER. PIPE SHALL CONFORM WITH ASTM-(B-43, B75, B251, B302, B306). PIPE FITTING SHALL CONFORM WITH ASTM-(B16.23, B16.29), ASSE 1061.

* SCHEDULE SHOWN FOR QUICK REFERENCE ONLY. SEE COMPLETE MATERIAL SPECIFICATIONS ON PB-0.1.
* MATERIALS FOR DRAINAGE PIPING SHALL BE IN ACCORDANCE WITH ONE OF THE REFERENCED STANDARDS IN TABLE 701.2. MATERIALS FOR BUILDING WATER PIPING AND BUILDING SUPPLY PIPING SHALL COMPLY WITH THE APPLICABLE STANDARD REFERENCED IN TABLE 604.1.
* ALL METALLIC NATURAL GAS PIPE AND JOINTING SHALL COMPLY WITH STANDARDS LISTED UNDER CPC 1208.6.

CALCULATIONS AND TABLES

MINIMUM PLUMBING FIXTURE BRANCH PIPE SIZE*

TAG	FIXTURE	WASTE	TRAP	VENT	CW	HW	REMARK
WC	WATER CLOSET (FLUSH VALVE)	4"Ø	--	2"Ø	1½"Ø	--	①③
UR	URINAL (FLUSH VALVE)	2"Ø	1½"Ø	2"Ø	1½"Ø	--	①③
LAV	LAVATORY	2"Ø	1½"Ø	1½"Ø	¾"Ø	¾"Ø	①②
FD	FLOOR DRAIN	2"Ø	2"Ø	**	--	--	
FS-2	FLOOR SINK 1	3"Ø	2"Ø	**	--	--	
FS-1	FLOOR SINK 3	2"Ø	2"Ø	**	--	--	
NO USE	--	--	--	--	--	--	
TP	TRAP PRIMER	--	--	--	¾"Ø	--	①
HB	HOSE BIBB	--	--	--	¾"Ø	--	①⑥
8	3-COMP SINK	2"Ø	1½"Ø	2"Ø	¾"Ø	¾"Ø	①⑦
9	HAND SINK	2"Ø	1½"Ø	1½"Ø	¾"Ø	¾"Ø	①
10	1-COMP SINK	2"Ø	--	--	¾"Ø	¾"Ø	①⑦
11	ICE MACHINE	¾"Ø	--	--	**	--	⑤⑥⑦
14	MOP SINK	2"Ø	1½"Ø	2"Ø	¾"Ø	¾"Ø	①⑥
53	WOK RANGE FAUCET	2"Ø	--	--	¾"Ø	--	①⑦
54	DRINKING FOUNTAIN						

* PIPE SIZES SHOWN ARE NOT FIXTURE CONNECTION SIZE BUT BRANCH LINE SIZE. SEE FINAL PRODUCT MANUFACTURER RECOMMENDED PIPING CONNECTION SIZES PRIOR TO INSTALL. PROVIDE REDUCER BETWEEN BRANCH LINE AND CONNECTION AS REQUIRED.
** UNDERGROUND VENT PIPE AND TRAP ARM EXTENSION SHALL COMPLY WITH CPC TABLE 1002.2.

REMARKS
① PROVIDE WATER HAMMER ARRESTER FOR EACH FIXTURE BANK AND MIN. 18" AIR CHAMBER AT EACH PLUMBING FIXTURE.
② PROVIDE THERMAL MIXING VALVE AND SET HOT WATER TEMPERATURE NO HIGHER THAN 110°F.
③ FLASH VALVE PLUMBING FIXTURE
④ PROVIDE WALL BOX WITH SHUT-OFF VALVE KIT AND FLEX HOSE FOR WASHER CONNECTION
⑤ PROVIDE FILTERED WATER FROM EQMP. 43
⑥ PROVIDE BACKFLOW PREVENTION DEVICE AT EQUIPMENT CONNECTION
⑦ DISCHARGE TO NEARBY FLOOR SINK WITH AIR GAG INDIRECTLY

COLD WATER MAIN AND METER CALCULATIONS*

1. PROPOSED FIXTURE UNIT: 500.5 F.U. (125-GPM)
2. TOTAL ESTIMATED DEVELOPED PIPE LENGTH: 400 FT
3. ESTIMATION OF AVAILABLE PRESSURE FOR DISTRIBUTION
   - A. AVAILABLE STREET PRESSURE: 71 PSI
   - B. (E) 2"Ø WATER METER PRESSURE DROP: 12 PSI
   - C. BACKFLOW PREVENTER (ZURN/ MODEL 975XL2) PRESSURE DROP: 14 PSI
   - TOTAL AVAILABLE PRESSURE FOR DISTRIBUTION: 45 PSI
4. ESTIMATION OF AVAILABLE PRESSURE FOR PIPING
   - A. BUILDING STATIC PRESSURE DROP: 9 PSI (20FH)
   - B. MINIMUM REQUIRED RESIDUAL PRESSURE: 25 PSI
   - TOTAL AVAILABLE PRESSURE FOR PIPING: 11 PSI
5. MAXIMUM ALLOWABLE PRESSURE DROP (PSI/100 FT)
   - A. (11 PSI / 400 FT) X 100 FT = 2.7 PSI / 100 FT
6. ESTIMATE MINIMUM REQUIRED WATER MAIN TO SATISFY ALL OF THE FOLLOWING DESIGN CONDITIONS:
   - A. CARRY TOTAL ESTIMATED GPM: 125 GPM OR (500.5 F.U)
   - B. WATER VELOCITY <= 8 FT/S
   - C. PIPE PRESSURE LOSS <= 2.7 PSI/100 FT
   - MINIMUM REQUIRED WATER MAIN: 3"Ø < 4"Ø (EXISTING)**
7. ESTIMATE MINIMUM REQUIRED WATER METER TO SATISFY ALL OF THE FOLLOWING DESIGN CONDITIONS:
   - A. PRESSURE RANGE: OVER 60 PSI
   - B. GIVEN WATER MAIN SIZE: 4"Ø
   - C. DEVELOPED PIPE LENGTH: 400 FT
   - D. CARRY TOTAL FLOW: 125 GPM OR (500.5 F.U)
   - MINIMUM REQUIRED WATER METER SIZE: 2"Ø = (E)2"Ø

* ESTIMATIONS ARE BASED ON 2019 CPC TABLE 610.4 AND APPENDIX A
** CONTRACTOR TO VERIFY EXACT (E) PIPE SIZE AT FILED AND REPLACE WATER MAIN TO 4" CW FROM DOWNSTREAM OF WATER METER TO BUILDING MAIN AS NEEDED

PIPE SIZING CHART, CPC 2019 APPENDIX "A"
CHART A-103.1 AND A-105.1 FOR TYPE "L" COPPER PIPING

PIPE SIZE	FRICTION LOSS PSI/100 FT	MAX. FPS CW	MAX. FPS HW	CW GPM (FLUSH TANK)	CW GPM (FLUSH VALVE)	HW GPM (FLUSH TANK)	WSFU CW (FLUSH TANK)	WSFU CW (FLUSH VALVE)	WSFU HW (FLUSH TANK)
⅜"	2.7 PSI	8.0	5.0	--	--	--	--	--	--
½"	2.7 PSI	8.0	5.0	--	--	--	--	--	--
¾"	2.7 PSI	8.0	5.0	4.0	--	4.0	4.0	--	4.0
1"	2.7 PSI	8.0	5.0	9.0	--	9.0	12.0	--	12.0
1¼"	2.7 PSI	8.0	5.0	15.0	--	15.0	21.0	--	21.0
1½"	2.7 PSI	8.0	5.0	25.0	25.0	25.0	42.0	8.0	42.0
2"	2.7 PSI	8.0	5.0	52.0	52.0	48.0	135.0	52.0	119.0
2½"	2.7 PSI	8.0	5.0	92.0	92.0	74.0	337.0	205.0	245.0
3"	2.7 PSI	8.0	5.0	145.0	145.0	105.0	611.0	521.0	406.0
3½"	2.7 PSI	8.0	5.0	220.0	220.0	140.0	1,091.0	1,091.0	585.0
4"	2.7 PSI	8.0	5.0	290.0	290.0	185.0	1,668.0	1,668.0	840.0

ALAMEDA COUNTY
TANKED WATER HEATER WORKSHEET

		L	W	D	Number of Compartments	Multiply by :	Gallons/Hour GPH
A:	Ware Washing Sink (Dimensions in inc	18	18	14	28	14	393
	Additional Warewashing Sink	18	18	14	84	14	1,178
	Hand Wash Sink(including restrooms)				36	5	180
	Bar Sink				0	6	0
	Food Preparation Sink				0	5	0
	Mop Sink				2	15	30
	Pre-Rinse Sprayer (only if on separate f:				0	45	0
	Garbage Wash Facility				1	15	15
	Clothes Washer (Default - 45 GPH)				0	45	0
							1,796
B:	Dish Machine(Manufacturer's Specification Sheet (M.S. Sheet))						0
C:	Add A and B					Total	1,796
D:	1 .Food Facilty with multi-use utensils?				No	1	0
	2. Food Facility with only single use ut				No	0.8	0
	3. Prepackaged food only?				Yes	0.8	1,437
E:	To get minimum Power Rating:				Thermal Effiency (Cut Sheet)		
	Gas: 8.33lbs/Gallon X 50 F Rise/Thermal Efficiency				0.95	-	629,853
	Electric: 8.33lbs/Gallon X 50 F Rise/Thermal Effi				N/A		#VALUE!
F:						Proposed:	800,000
	Must be Commercial and Total power rating at least as high as kW requi					Proposed:	
	List Brand and Model:				AO Smith BTH-400 x 2		

Alameda County
Dept. of Environmental Health
Approved By: T. Tran

CO-AR DESIGN, INC.
680 Brea Canyon Rd., Ste. 178
Diamond Bar, CA 91789

Office: 909-598-0186
http:\\www.coardesign.com

Dennis J. Lee, Architect
dennisl@coardesign.com

THESE DRAWINGS ARE THE PROPERTY OF THE ARCHITECT. THE DESIGNS SHOWN AND DESCRIBED HERIN INCLUDING ALL TECHNICAL DRAWINGS ARE PROPRIETARY AND CANNOT BE COPIED, DUPLICATED OR COMMERCIALLY EXPLOITED, IN WHOLE OR IN PART. THE DRAWINGS AND SPECIFICATIONS SHALL NOT BE USED BY THE OWNER ON OTHER PROJECTS, FOR ADDITIONS TO THIS PROJECT, OR FOR COMPLETION OF THIS PROJECT BY OTHERS. THE OWNER AGREES TO HOLD HARMLESS, INDEMNIFY AND DEFEND THE ARCHITECT AGAINST ALL DAMAGES, CLAIMS AND LOSSES, INCLUDING DEFENSE COSTS, ARISING OUT OF ANY REUSE OF THE PLANS AND SPECIFICATIONS WITHOUT THE WRITTEN AUTHORIZATION OF THE ARCHITECT OF RECORD

COPYRIGHT © 2022 CO-AR DESIGN, INC., ALL RIGHTS RESERVED

SEAL: REGISTERED PROFESSIONAL ENGINEER JIA HUI PAN M35374 EXP. 6/30/23 MECHANICAL STATE OF CALIFORNIA

NOTES:

JHP Engineering and Design Services Inc.
3103 Independence Drive
Livermore, CA 94551
TEL: 925-409-2508
CEL: 510-468-0613
FAX: 510-788-6039

PROJECT:
SALTALK FREMONT KITCHEN TENANT IMPROVEMENT

42550 ALBRAE ST.,
FREMONT, CA 94538

CLIENT
SALTALK, INC.
3334 VICTOR CT.,
SANTA CLARA, CA 95054

SUBMITTALS/ REVISIONS:

1	HEALTH/USD SUBMITTAL	04/01/2022
2	2ND BLD. SUBMITTAL	07/22/2022
3	3RD BLD SUBMITTAL 2	08/30/2022
4	3RD USD SUBMITTAL 3	09/01/2022
5	2ND HEALTH SUBMITTAL 4	09/29/2022

PROJECT NO: 21127
SCALE: AS SHOWN
DATE: 2/10/2022
DRAWN BY: TL / YC
CHECKED BY: JP

SHEET TITLE: **SCHEDULES, CALCULATIONS AND TABLES**

SHEET NO: **P-0.2**

BIMcloud: COAR-CONFERENCE - BIMcloud Basic for ARCHICAD 25/202201 Fremont-Ghost Kitchen Thursday, February 10, 2022 1:47 PM

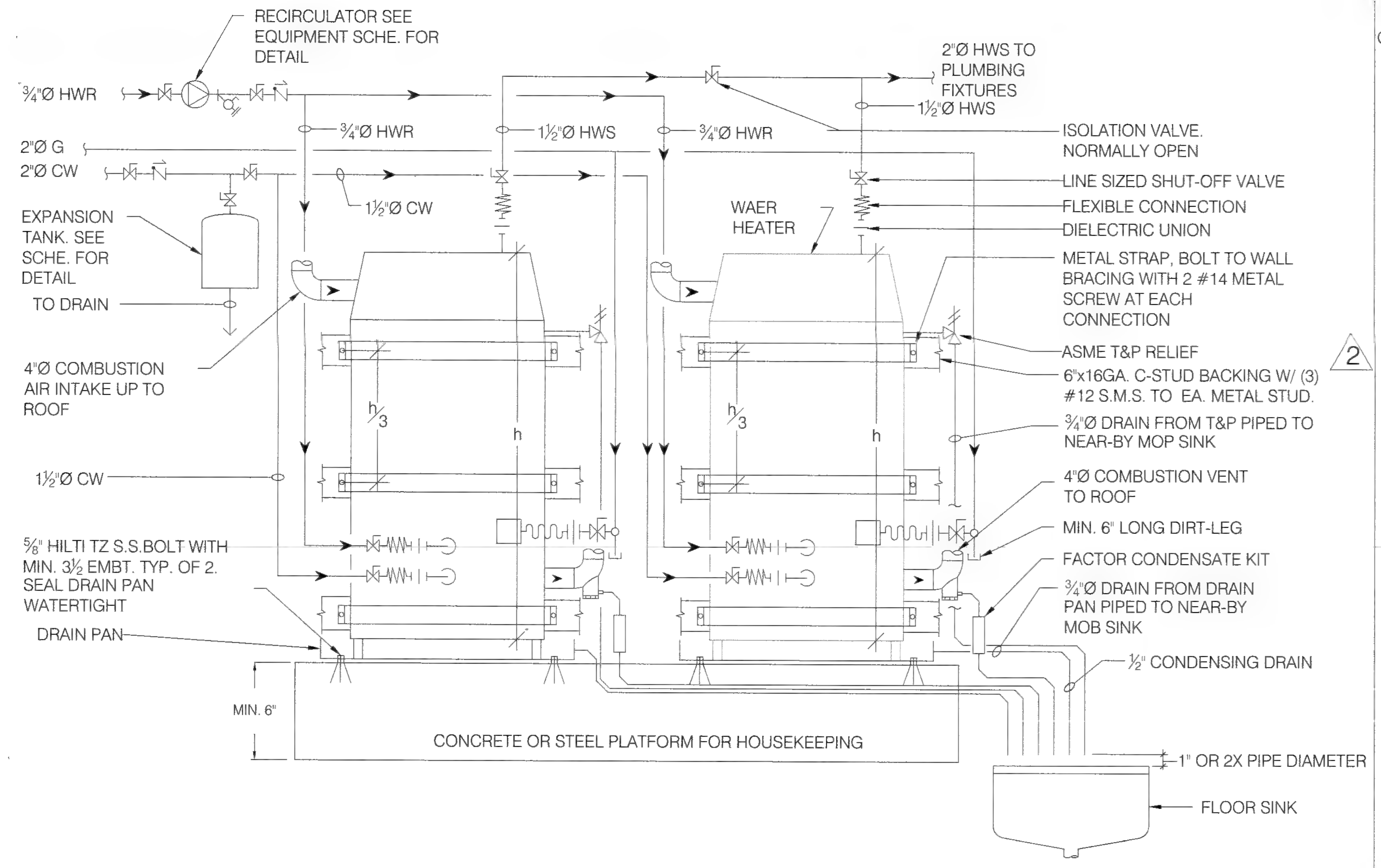

1 WATER HEATER MOUNTING AND PIPING DETAIL
SCALE: N.T.S.

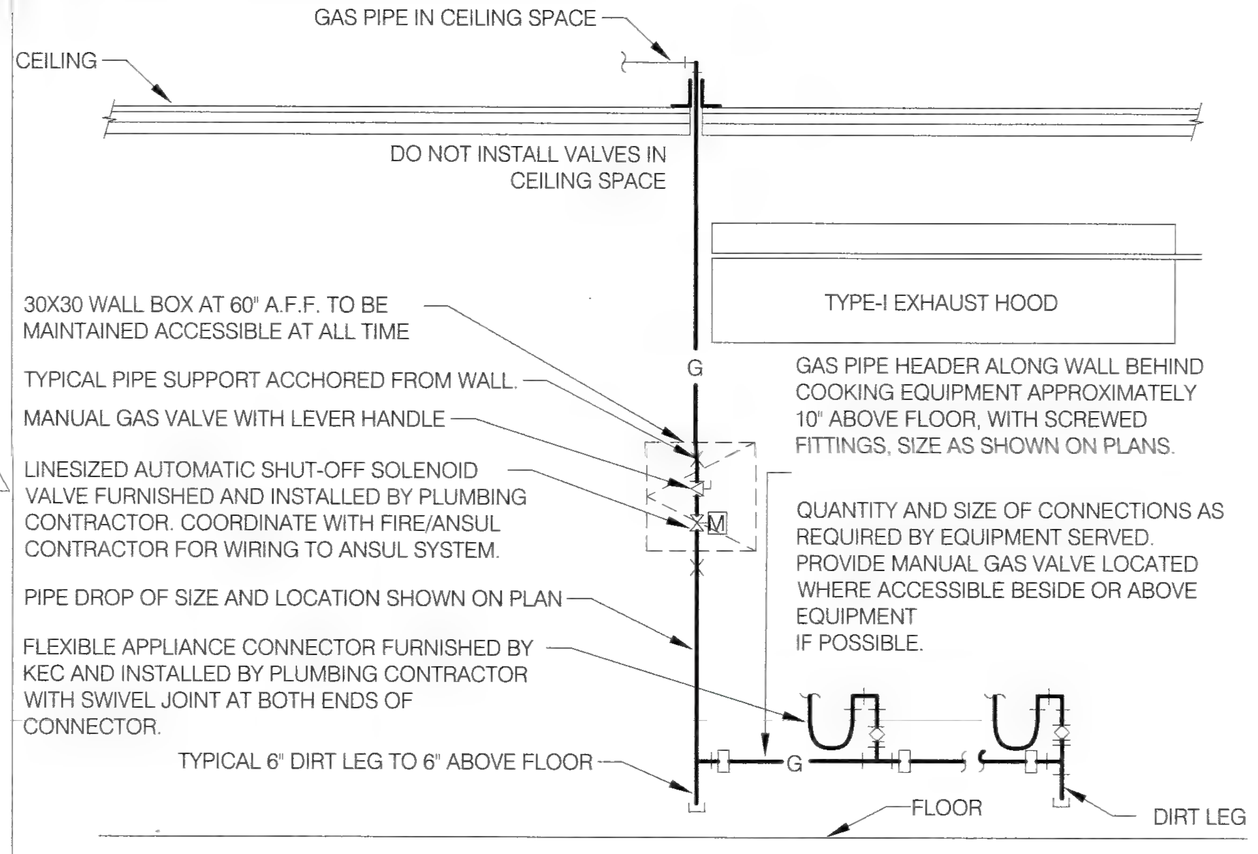

NOTES:
PROVIDE ANY GAS APPLIANCE PRESSURE REGULATORS REQUIRED. INSTALL ANY FURNISHED BY KITCHEN EQUIPMENT CONTRACTOR. VERIFY ROUGH-IN REQUIREMENTS WITH KITCHEN EQUIPMENT CONTRACTOR, COORDINATE WITH ELECTRICAL CONTRACTOR. ARRANGEMENT SHOWN IS SCHEMATIC, ADJUST TO SUIT ACTUAL CONDITIONS. ATTACH RISER AND HEADER TO WALL WITH 1" CLEARANCE BEHIND PIPE. MAKE FINAL CONNECTION TO EQUIPMENT AS RECOMMENDED BY MANUFACTURER. PROVIDE WELDED FITTINGS JOINTS IN ANY CONCEALED UNVENTILATED LOCATION.

2 COOKING APPLIANCE GAS PIPING DETAIL
SCALE: N.T.S.

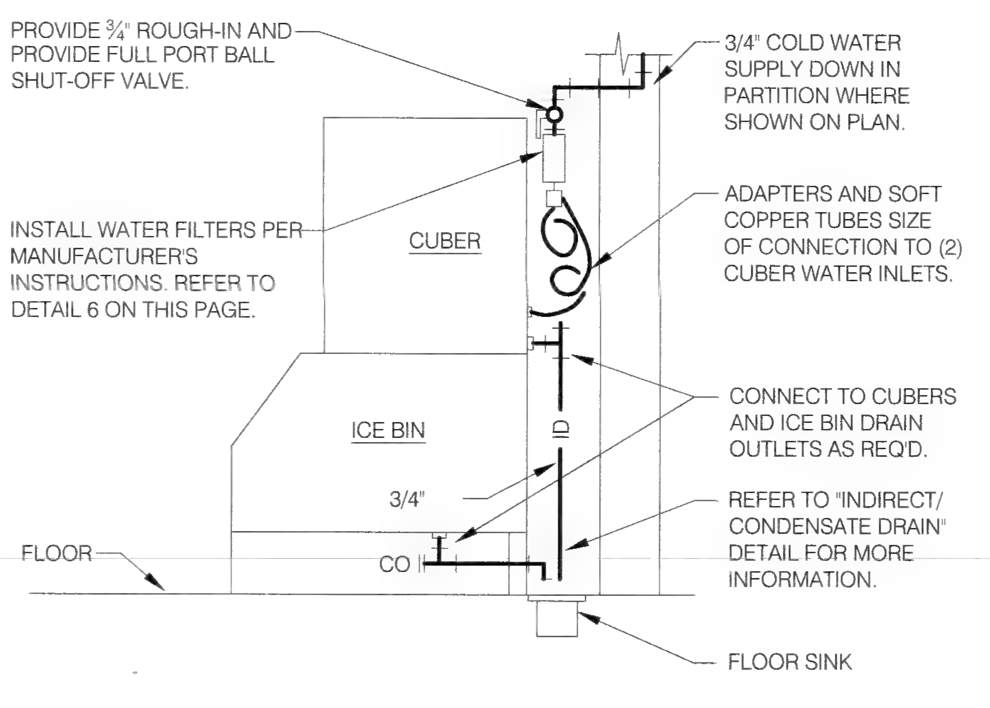

NOTES:
PROVIDE FLOOR SINK AT SIDE EDGE OF ICE MACHINE, WHERE ACCESSIBLE FOR CLEANING - NOT UNDER ANY EQUIPMENT.
PROVIDE COLD WATER ROUGH-IN AT TOP OF ICE MACHINES.
ARRANGEMENT SHOWN IS SCHEMATIC. ADJUST AS REQUIRED TO SUIT CONDITIONS. VERIFY CONNECTIONS WITH MANUFACTURER.

3 ICE MACHINE PIPING DETAILS
SCALE: N.T.S.

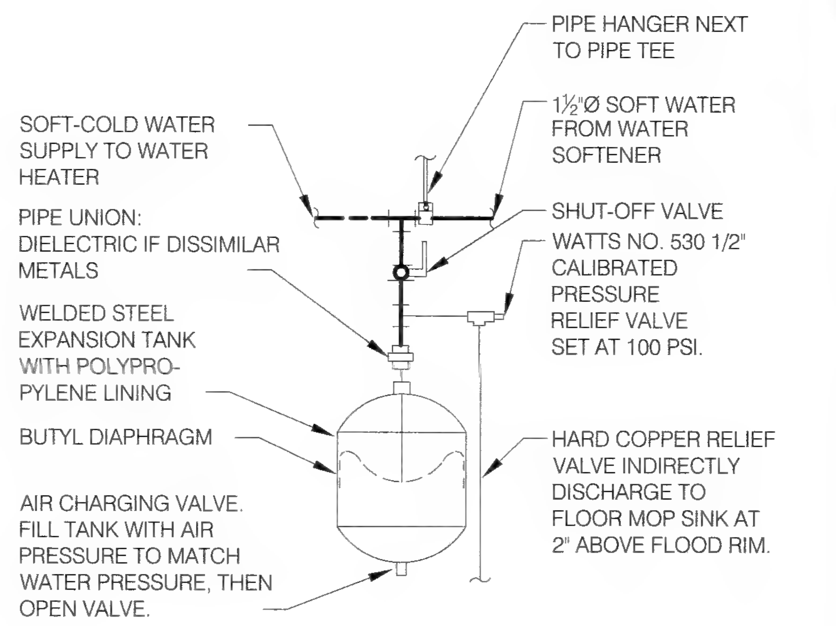

NOTES:
UNIT SHALL BE FDA APPROVED FOR DOMESTIC WATER USE. PIPING ARRANGEMENT SHOWN IS SCHEMATIC. ADJUST TO SUIT FIELD CONDITIONS. MAKE PIPE SAME SIZE AS TANK FITTING. FOLLOW MANUFACTURER'S INSTRUCTIONS FOR INSTALLATION PROCEDURE. VERIFY PROPER OPERATION WHEN INSTALLED.

4 EXPANSION TANK PIPING DETAIL
SCALE: N.T.S.

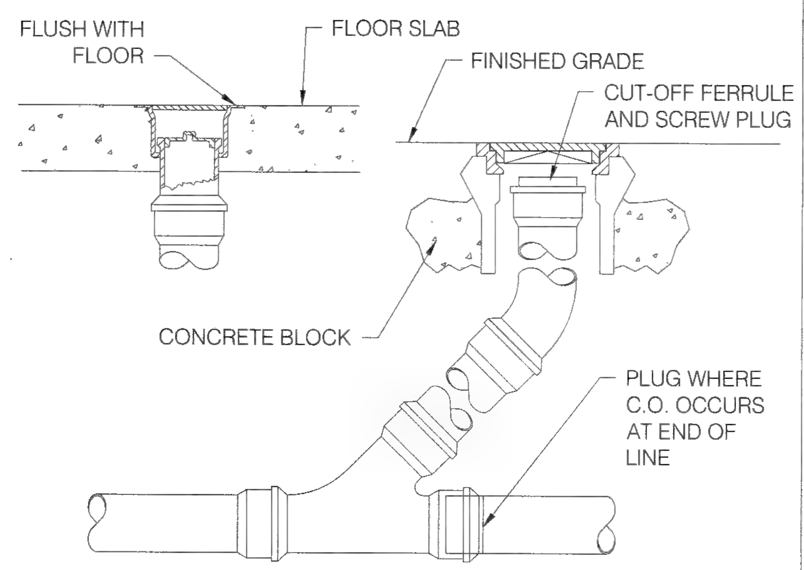

5 FLOOR CLEAN OUT DETAIL
SCALE: N.T.S.

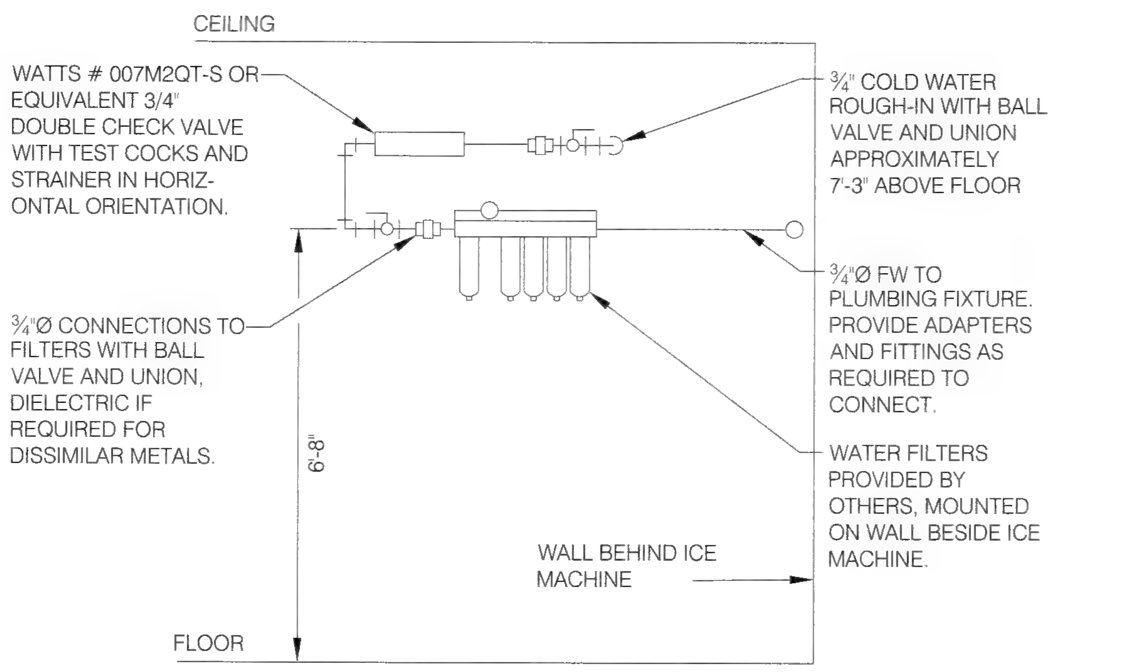

NOTES:
1. MAKE CONNECTION TO EQUIPMENT AS RECOMMENDED BY MANUFACTURERS.
2. USE LINE SIZED (1"Ø) BFP FOR EQUIPMENT 43.

6 WATER FILTERS AT ICE MACHINE PIPING DETAIL
SCALE: N.T.S.

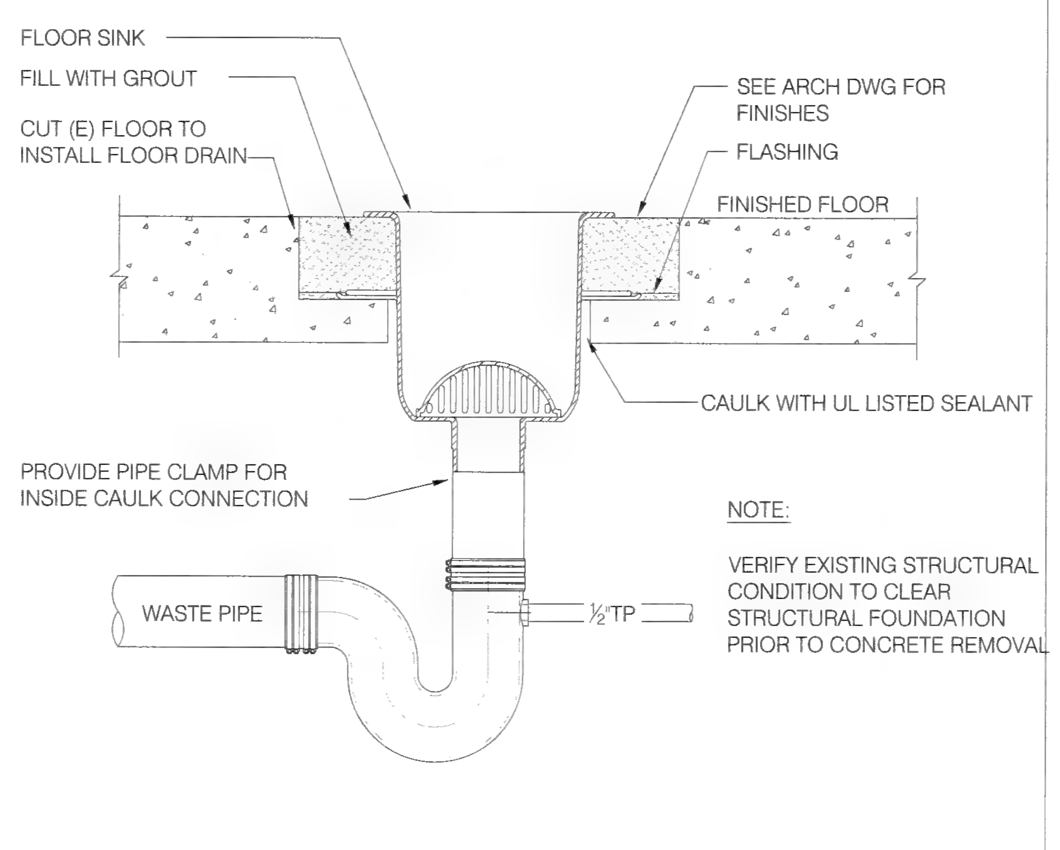

NOTE:
VERIFY EXISTING STRUCTURAL CONDITION TO CLEAR STRUCTURAL FOUNDATION PRIOR TO CONCRETE REMOVAL

7 FLOOR SINK INSTALLATION DETAIL
SCALE: N.T.S.

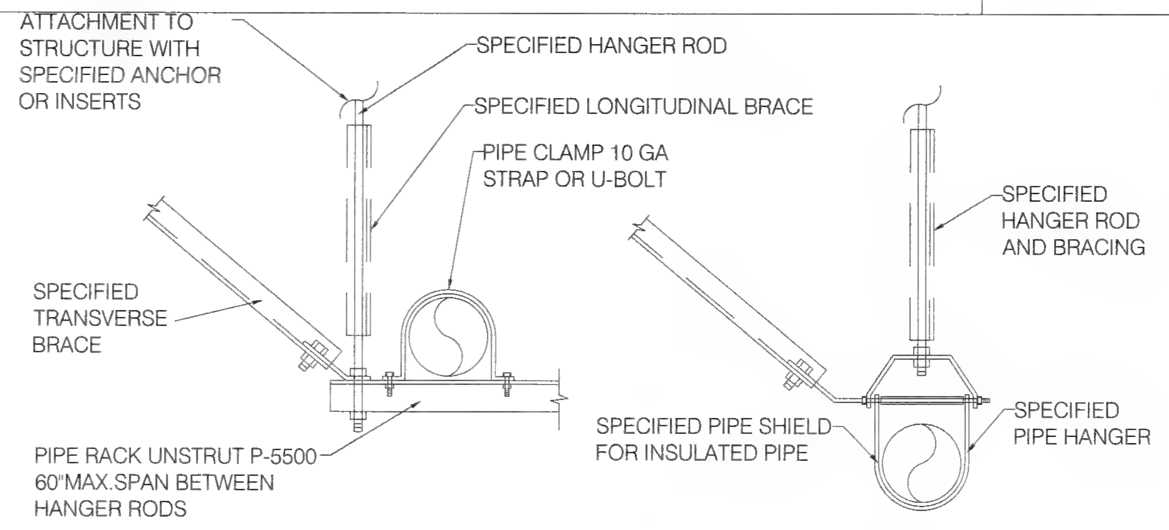

PIPE SIZE	HANGER ROD SIZE	MAX. WEIGHT PER HANGER LOAD	MAXIMUM PIPE SUPPORT SPACING
½"-1½"	⅜"	610 LBS	6'- 0"
2"-3"	½"	730 LBS	10'- 0"
4"	⅝"	810 LBS	12'- 0"

NOTES:
1. SUPPORT PIPES AT INTERVALS INDICATED AND AT EACH CHANGE OF DIRECTION.
2. MULTIPLE PIPES MAY BE SUPPORTED ON A COMMON TRAPEZE SIZE AND SPACING TRAPEZE SIZE AND SUPPORT SPACING SHALL BE GOVERNED BY CUMULATIVE WEIGHT OF SUPPORTED PIPING.
3. BRACE PIPING LONGITUDINALLY AND TRANSVERSELY ACCORDING TO SMACNA GUIDELINES FOR SEISMIC RESTRAINTS OF MECHANICAL SYSTEM AND PLUMBING PIPING SYSTEM

8 PIPE SUPPORT DETAIL
SCALE: N.T.S.

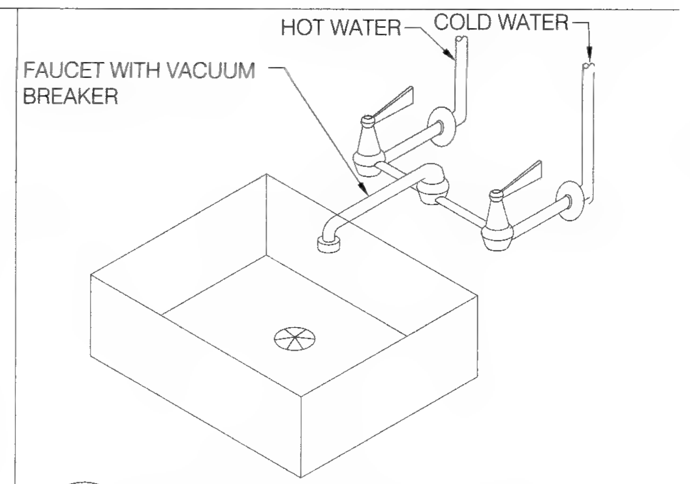

9 MOP SINK DETAIL
SCALE: N.T.S.

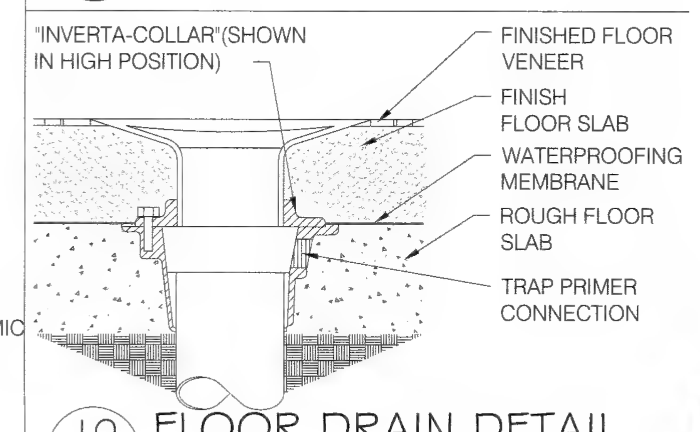

10 FLOOR DRAIN DETAIL
SCALE: N.T.S.

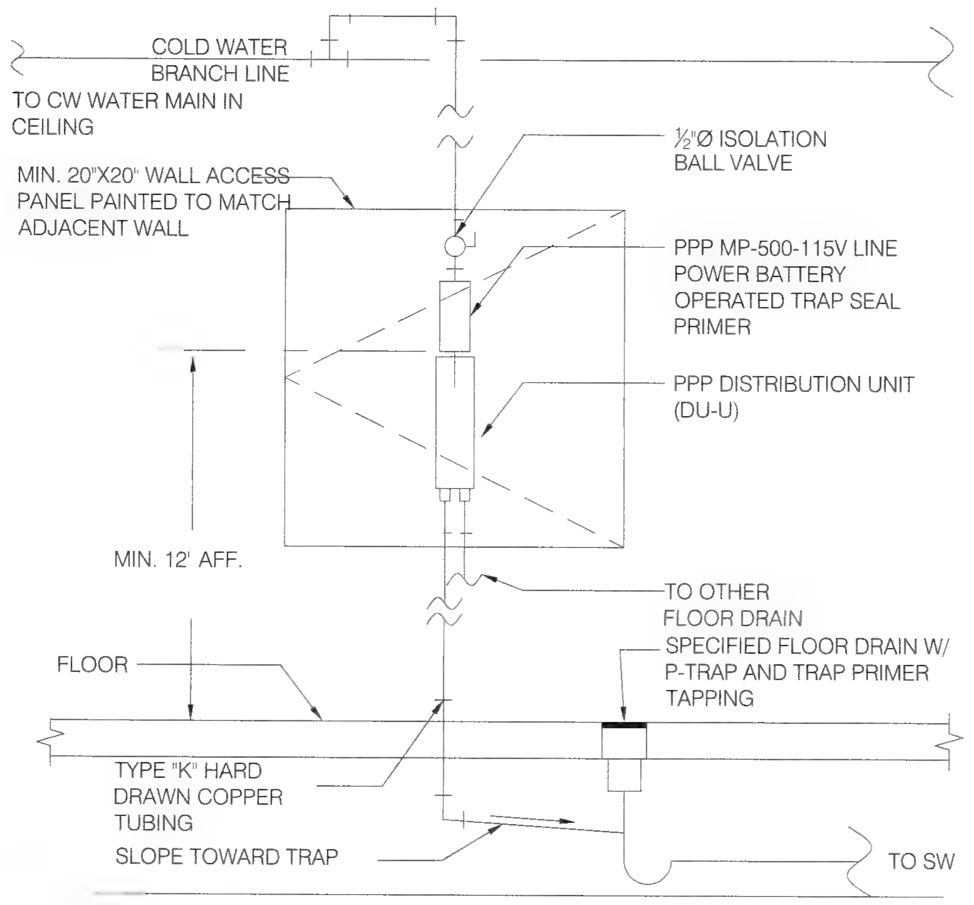

11 TRAP PRIMER PIPING DETAIL
SCALE: N.T.S.

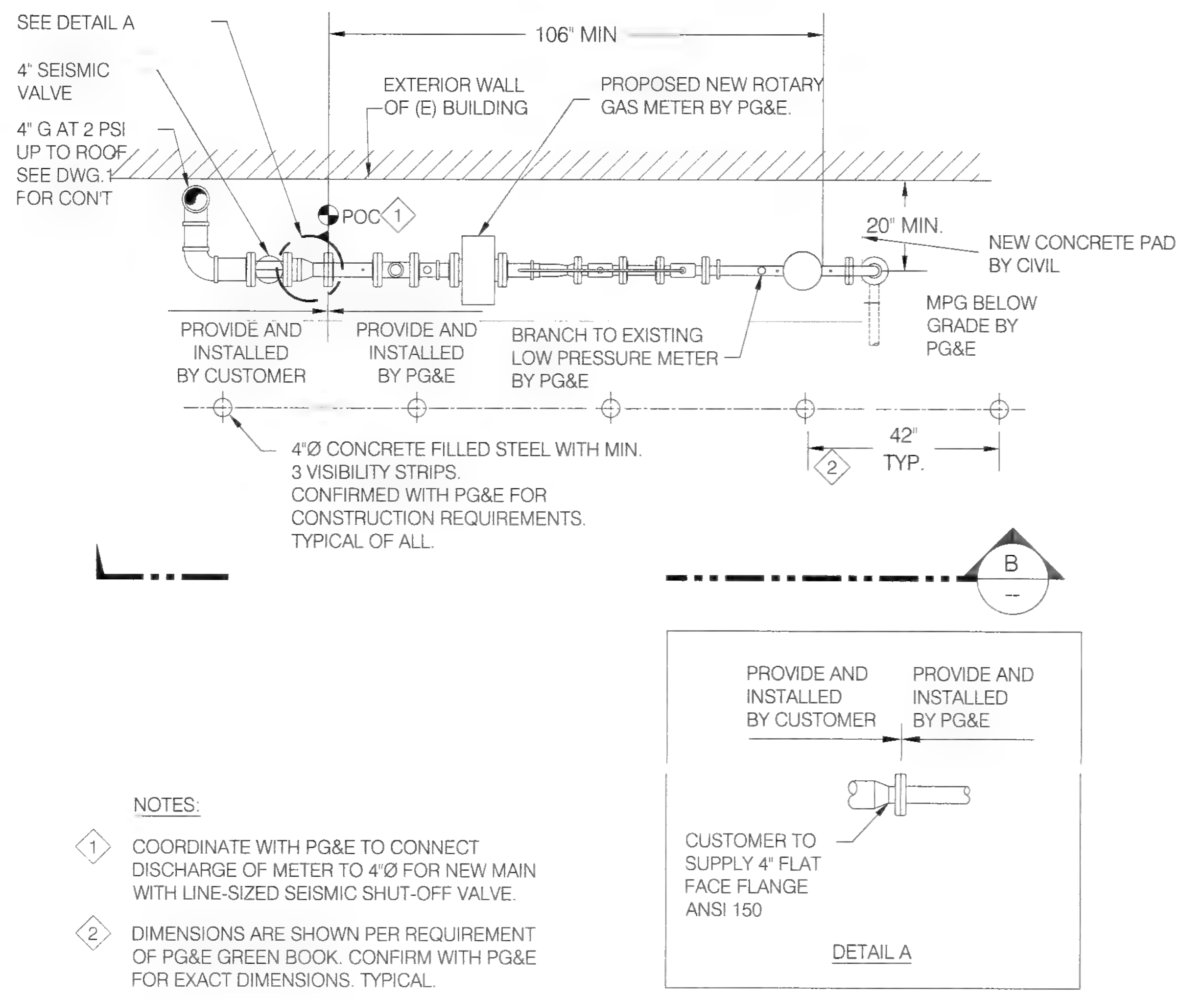

NOTES:
1. COORDINATE WITH PG&E TO CONNECT DISCHARGE OF METER TO 4"Ø FOR NEW MAIN WITH LINE-SIZED SEISMIC SHUT-OFF VALVE.
2. DIMENSIONS ARE SHOWN PER REQUIREMENT OF PG&E GREEN BOOK. CONFIRM WITH PG&E FOR EXACT DIMENSIONS. TYPICAL.

Alameda County
Dept. of Environmental Health
Approved By: T. Tran

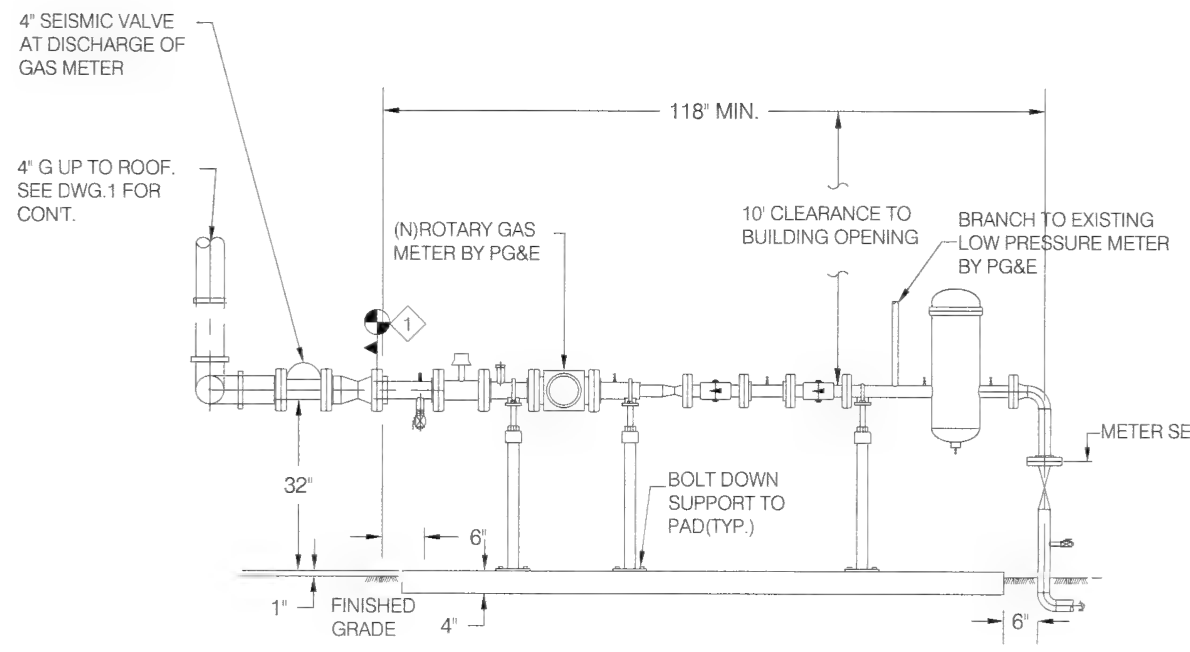

12 NEW GAS METER BANK DETAIL
SCALE: N.T.S.

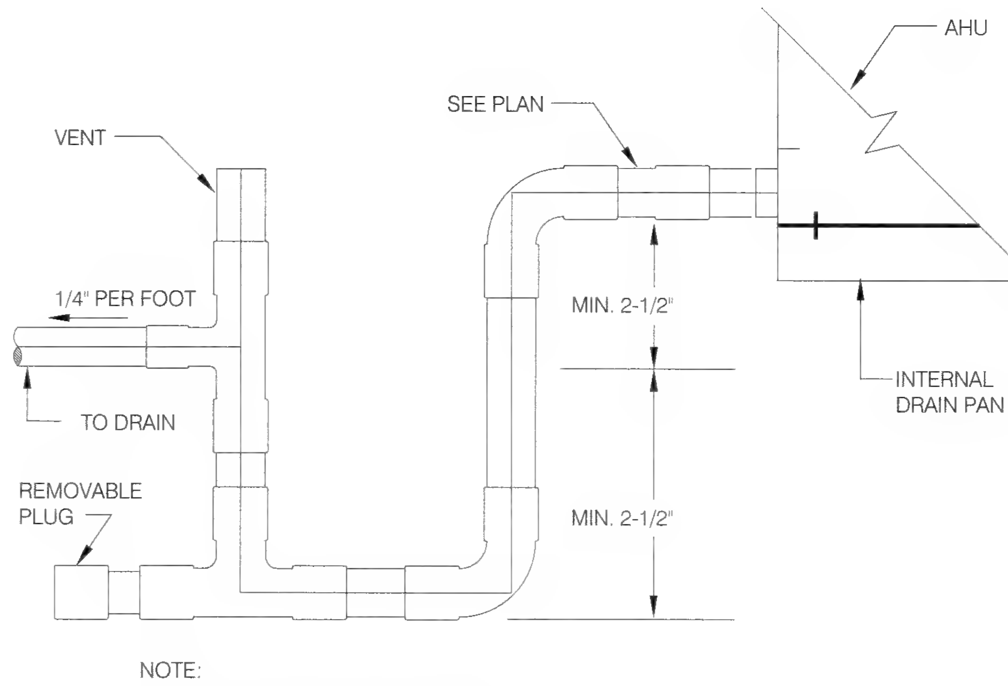

NOTE:
1. OVERFLOW CONNECTION SIMILAR

13 CONDENSATE DRAIN PIPING FOR AHU
SCALE: N.T.S.

CO-AR DESIGN, INC.
680 Brea Canyon Rd., Ste. 178
Diamond Bar, CA 91789
Office: 909-598-0186
http://www.coardesign.com
Dennis J. Lee, Architect
dennisl@coardesign.com

THESE DRAWINGS ARE THE PROPERTY OF THE ARCHITECT. THE DESIGNS SHOWN AND DESCRIBED HEREIN INCLUDING ALL TECHNICAL DRAWINGS ARE PROPRIETARY AND CANNOT BE COPIED, DUPLICATED OR COMMERCIALLY EXPLOITED, IN WHOLE OR IN PART. THE DRAWINGS AND SPECIFICATIONS SHALL NOT BE USED BY THE OWNER ON OTHER PROJECTS, FOR ADDITIONS TO THIS PROJECT, OR FOR COMPLETION OF THIS PROJECT BY OTHERS. THE OWNER AGREES TO HOLD HARMLESS, INDEMNIFY AND DEFEND THE ARCHITECT AGAINST ALL DAMAGES, CLAIMS AND LOSSES, INCLUDING DEFENSE COSTS, ARISING OUT OF ANY REUSE OF THE PLANS AND SPECIFICATIONS WITHOUT THE WRITTEN AUTHORIZATION OF THE ARCHITECT OF RECORD.
COPYRIGHT © 2022 CO-AR DESIGN, INC. ALL RIGHTS RESERVED.

SEAL
NOTES

JHP Engineering and Design Services Inc.
3103 Independence Drive
Livermore, CA 94551
TEL: 925-409-2508
CEL: 510-468-0613
FAX: 510-788-6039

PROJECT
SALTALK FREMONT KITCHEN TENANT IMPROVEMENT
42550 ALBRAE ST., FREMONT, CA 94538

CLIENT
SALTALK, INC.
3334 VICTOR CT., SANTA CLARA, CA 95054

SUBMITTALS/ REVISIONS

1	HEALTH/USD SUBMITTAL	04/01/2022
2	2ND BLD. SUBMITTAL	07/22/2022
3	3RD BLD. SUBMITTAL	08/30/2022
4	3RD USD SUBMITTAL	09/01/2022
5	2ND HEALTH SUBMITTAL	09/29/2022

PROJECT NO	21127
SCALE	AS SHOWN
DATE	2/10/2022
DRAWN BY	TL / YC
CHECKED BY	JP

SHEET TITLE
PLUMBING DETAILS

SHEET NO.
P-0.3

5000 GALLON GREASE INTERCEPTOR

MODEL JZ5000EPE-G
LISTED BY UPC®
NORTHERN CALIFORNIA

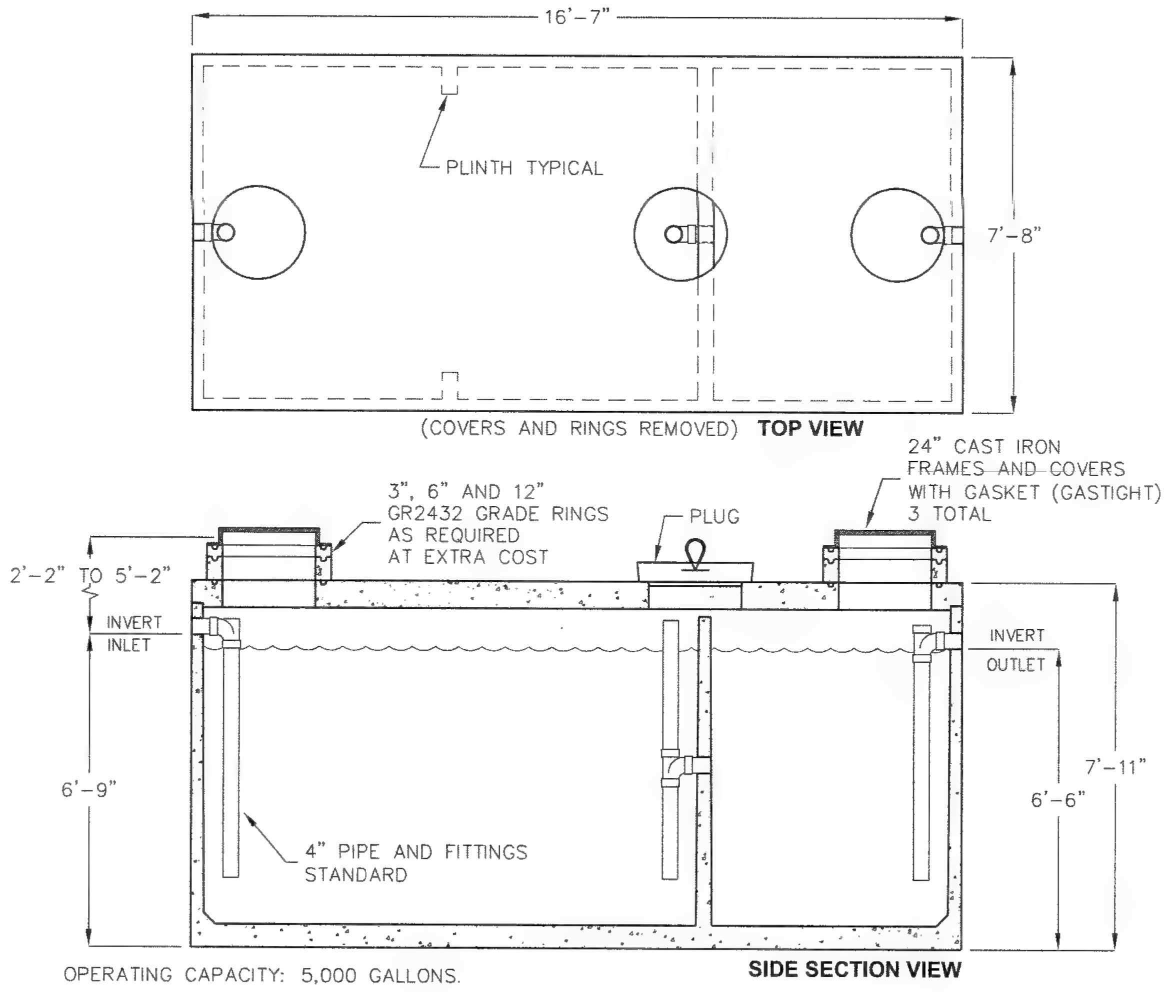

OPERATING CAPACITY: 5,000 GALLONS.

DESIGN LOAD: H-20 TRAFFIC WITH DRY SOIL CONDITIONS (WATER LEVEL BELOW TANK) AND 1'-4' EARTH COVER.

SUITABLE SUB-BASE BEDDED WITH GRANULAR MATERIAL SHALL BE PREPARED TO HANDLE ANTICIPATED LOADS.

FOR COMPLETE DESIGN AND PRODUCT INFORMATION CONTACT JENSEN PRECAST.

MINIMUM EXCAVATION 8'-8" x 17'-7" x REQ'D DEPTH

8/27/07
JZ5000G_EXPE_NOCAL_A.dwg
© 2007 Jensen Precast

Jensen Precast reserves the right to make changes to product design and/or dimensions without notice. Please contact Jensen Precast whenever necessary for confirmation or advice on product design.

JENSEN PRECAST

24" SAMPLE BOX

MODEL 200
(FOR LARGE PIPES)

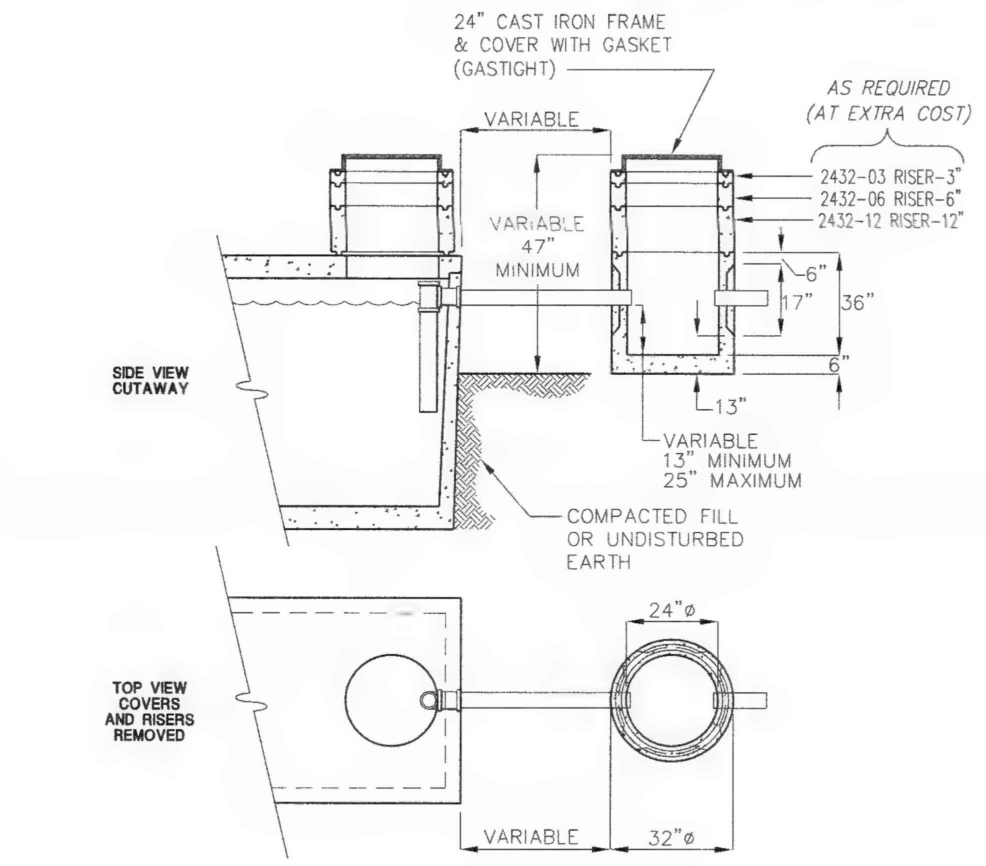

BOX WEIGHT: 1400 LBS.
BOX DESIGN LOAD: H-20 TRAFFIC

△1

SAMPLE BOX MUST BE PLACED ON SUITABLE BASE OF COMPACTED SOIL OR UNDISTURBED EARTH IN TRAFFIC CONDITION. FOR COMPLETE DESIGN AND PRODUCT INFORMATION, CONTACT JENSEN PRECAST.

10/19/05
200SampleBox.dwg
© 2002 Jensen Precast

JENSEN PRECAST

GRADE RINGS/RISERS

MODEL 2432
24" I.D., 4" WALL

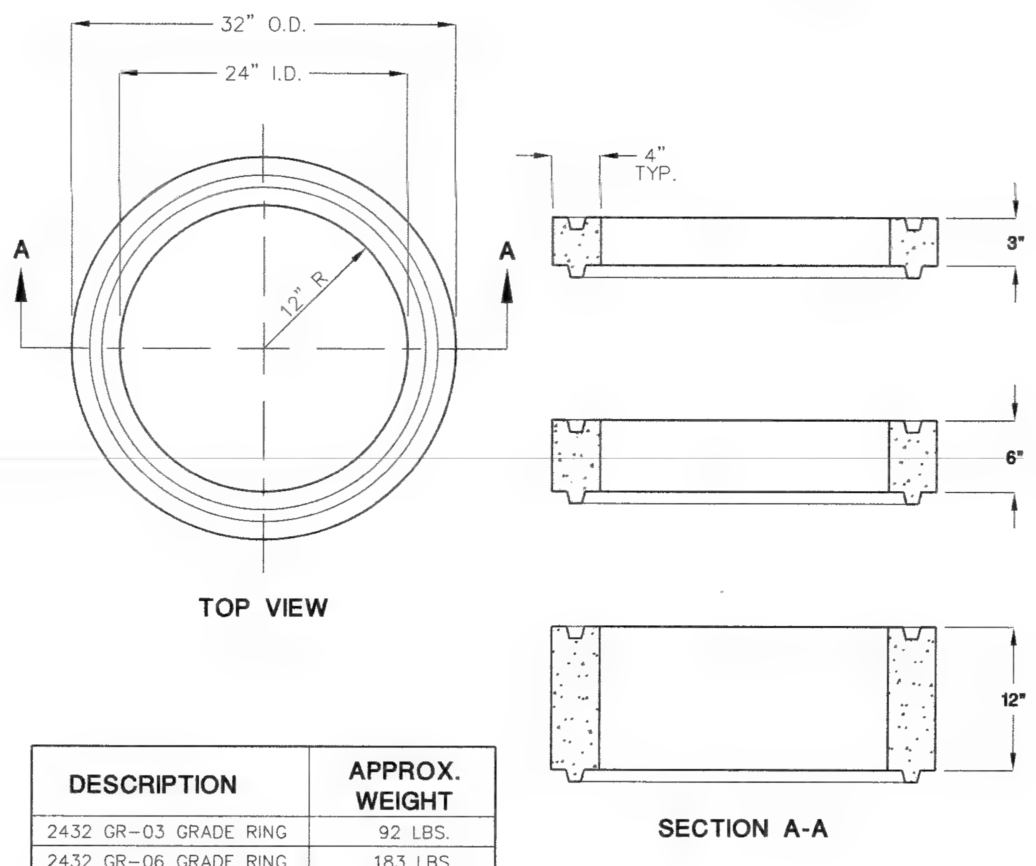

DESCRIPTION	APPROX. WEIGHT
2432 GR-03 GRADE RING	92 LBS.
2432 GR-06 GRADE RING	183 LBS.
2432 GR-12 GRADE RING	366 LBS.

CONFORMS TO CURRENT SPECIFICATIONS: ASTM C-478 AND AASHTO M-199

FOR COMPLETE DESIGN AND PRODUCT INFORMATION, CONTACT JENSEN PRECAST.

Alameda County
Dept. of Environmental Health
Approved By: T. Tran

11/7/00
GR2432.dwg
© 2000 Jensen Precast

JENSEN PRECAST

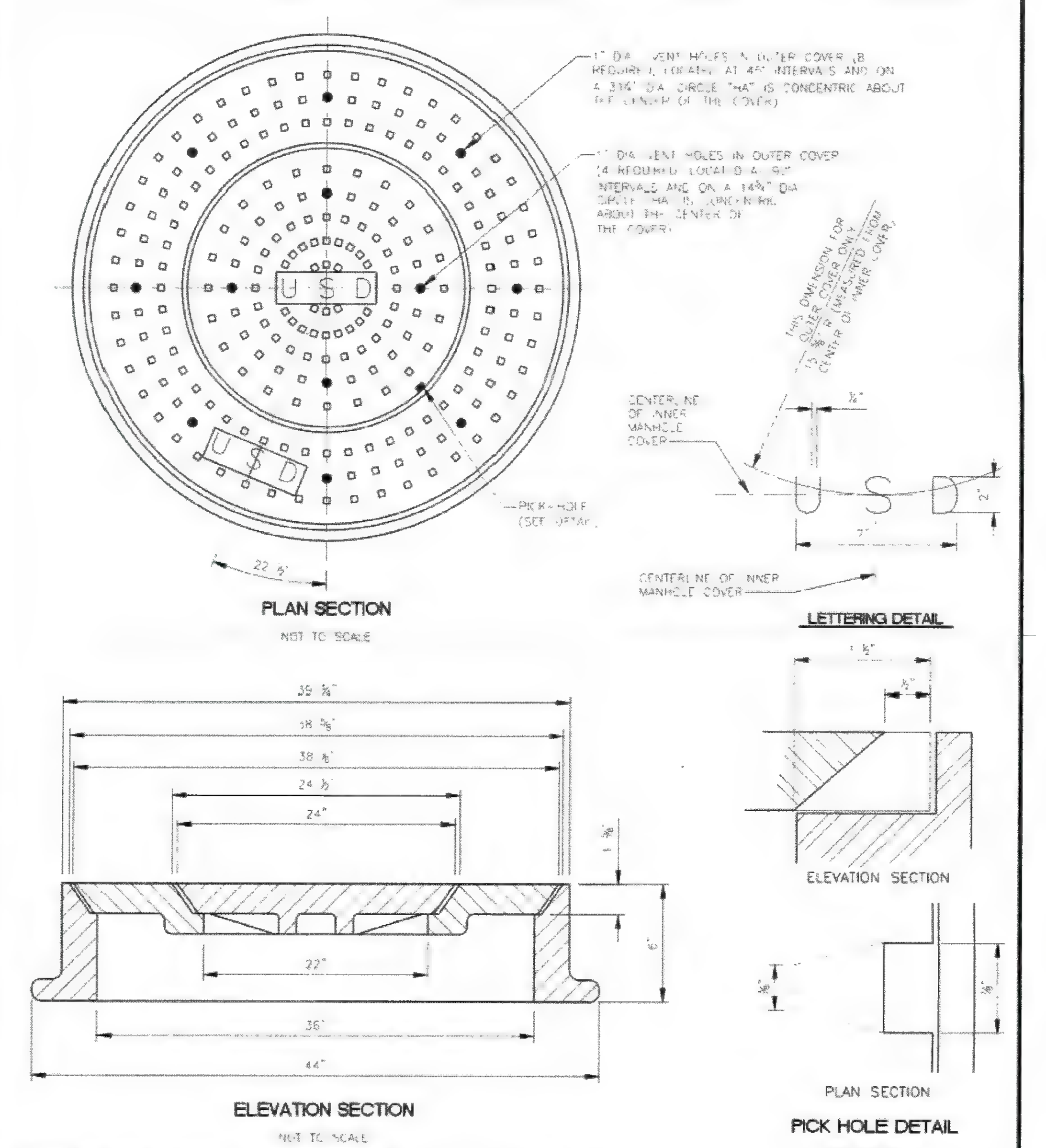

NOTES

1. CAST IRON FOR FRAME AND COVER SHALL BE CLASS 30 MINIMUM AS PER ASTM A-48
2. RAISED LETTERS 1/4" HIGH TO BE CAST IN CENTER OF MANHOLE COVER
3. MINOR MODIFICATIONS IN ABOVE DIMENSIONS AND MANUFACTURING CONFIGURATIONS ARE PERMISSIBLE SUBJECT TO DISTRICT APPROVAL
4. BEFORE LEAVING THE FOUNDRY THE FRAME AND COVERS SHALL BE PAINTED OR DIPPED IN ASPHALT PAINT
5. MANHOLE FRAME AND COVER SHALL BE AS MANUFACTURED BY SOUTH BAY FOUNDRY, 42 N. CLUFF AVE., LODI, CA 95240, OR APPROVED EQUAL
6. FRAME AND COVER BEARING SURFACES SHALL BE MACHINED TO ASSURE CLOSE, QUIET FIT

Date 3/15/17 Detail No. 11 Approved By PAUL R. ELDREDGE, RCE 60211	UNION SANITARY DISTRICT	36" DIAMETER MANHOLE FRAME AND COVER	11

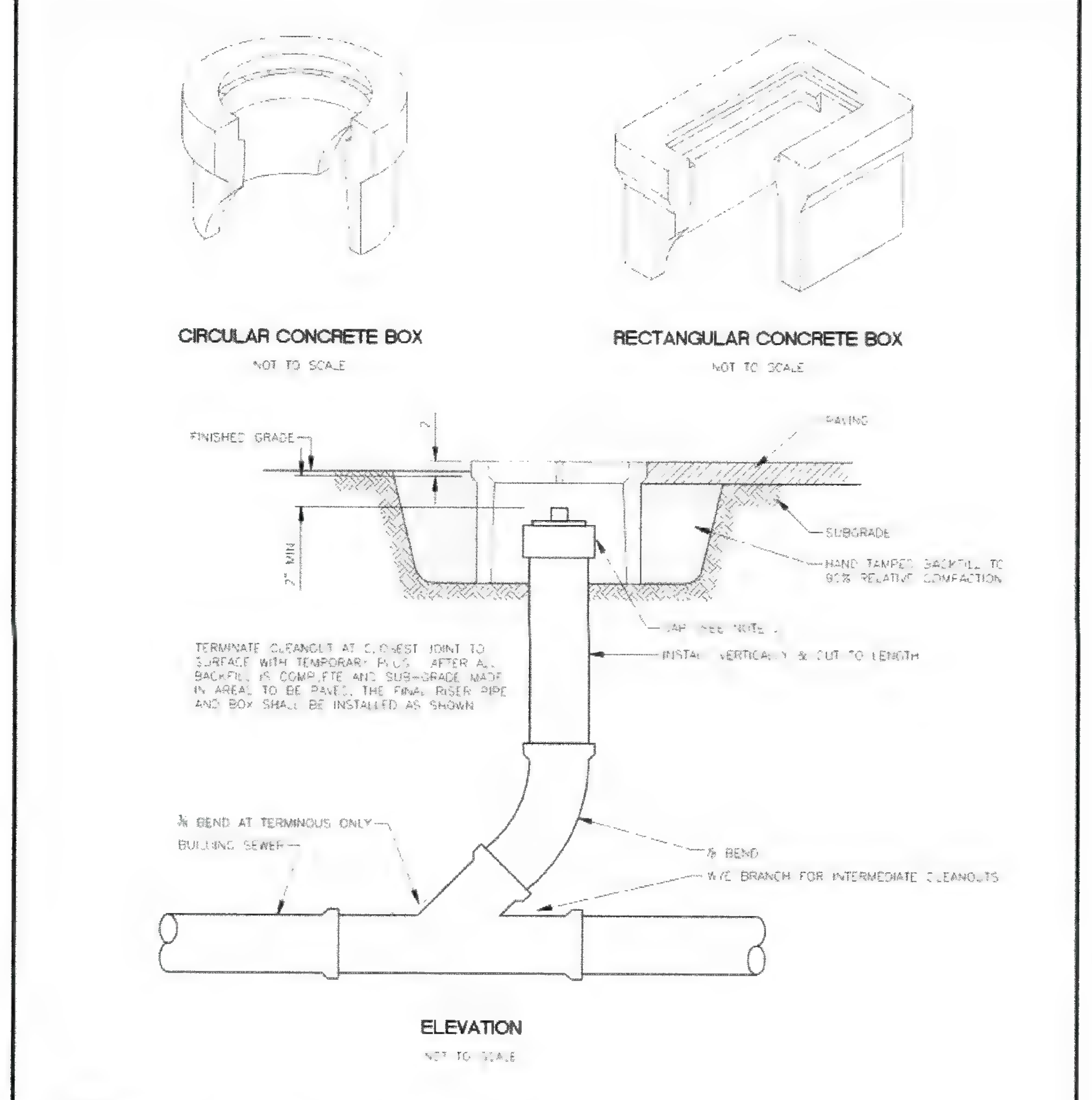

Date 3/15/17 Detail No. 15 Approved By PAUL R. ELDREDGE, RCE 60211	UNION SANITARY DISTRICT	STANDARD BUILDING SEWER CLEANOUT TO GRADE	15

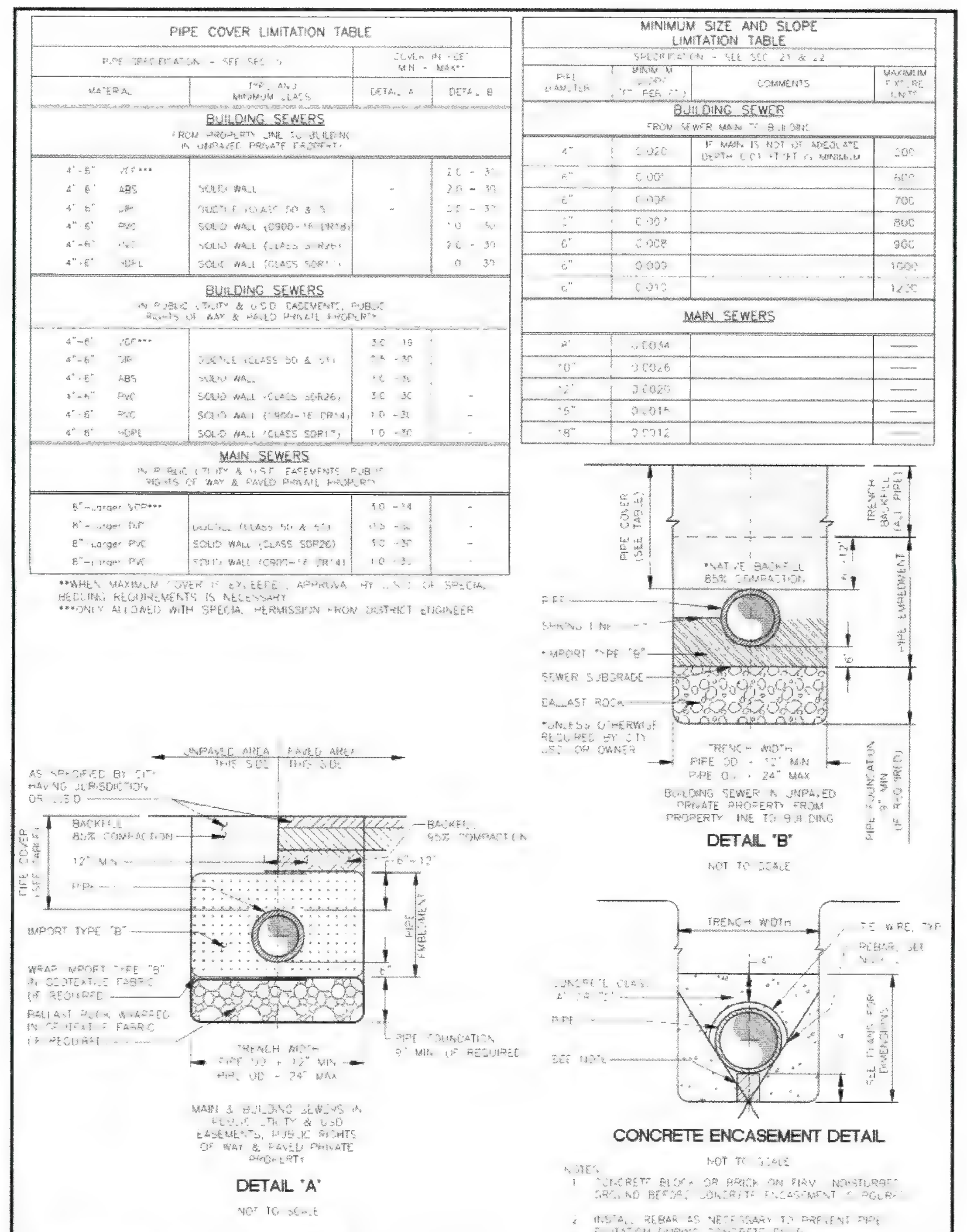

Date 3/15/17 Detail No. 18A Approved By PAUL R. ELDREDGE, RCE 60211	UNION SANITARY DISTRICT	SEWER PIPE INSTALLATION (COVER, SLOPE, SPECIAL BEDDING AND ENCASEMENT REQUIREMENTS)	18A

PIPE FOUNDATION (IF REQUIRED BY ENGINEER)

ROCK BALLAST

ROCK BALLAST SHALL BE 1-½" BY ¾" GRAVEL CONFORMING TO THE FOLLOWING GRADATIONS

SIEVE SIZE	PERCENT PASSING (BY WEIGHT)
2"	100
1-½"	95-100
¾"	5-30
⅜"	5-20
NO. 200	0-4

PIPE EMBEDMENT MATERIAL

IMPORT "TYPE A"

SHALL BE CREEK OR BANK GRAVEL, CRUSHED GRAVEL, CRUSHED ROCK, BANK RUN ROCK OR A MIXTURE OF THESE MATERIALS. RECLAIMED OR RECYCLED MATERIALS ARE NOT ACCEPTABLE.

THE MATERIAL SHALL BE FREE FROM ROOTS, VEGETABLE MATTER, OR OTHER DELETERIOUS SUBSTANCE AND SHALL BE OF SUCH NATURE AND SO GRADED THAT IT WILL BIND READILY WHEN WATERED AND COMPACTED TO THE REQUIREMENT SPECIFIED HEREIN.

THE MATERIAL SHALL BE OF SUCH SIZE THAT THE PERCENTAGE COMPOSITION BY WEIGHT AS DETERMINED BY LABORATORY SIEVES WILL CONFORM TO THE FOLLOWING GRADATIONS.

SIEVE SIZE	PERCENT PASSING (BY WEIGHT)
1"	100
¾"	90-100
NO. 4	[illegible]-100
NO. 30	10-3[illegible]
NO. 200	2-9

THE MATERIAL SHALL ALSO HAVE A MINIMUM SAND EQUIVALENT OF 22 AND A MINIMUM RESISTENCE (R) VALUE OF 78.

IMPORT "TYPE B"

"TYPE B" IMPORT SHALL BE WASHED CRUSHED ROCK (CHIPS). THIS MATERIAL SHALL CONTAIN AT LEAST 75% OF THE PARTICLES HAVING ONE OR MORE FRACTURED FACES. NOT OVER 25% SHALL BE PIECES THAT SHOW NO SUCH FACES RESULTING FROM CRUSHING. ROCK WILL BE DESIGNATED BY NORMAL SIZE. RECLAIMED OR RECYCLED MATERIALS ARE NOT ACCEPTABLE.

THE MATERIAL SHALL BE OF SUCH SIZE THAT THE PERCENTAGE COMPOSITION BY WEIGHT AS DETERMINED BY LABORATORY SIEVES WILL CONFORM TO THE FOLLOWING GRADATIONS.

SIEVE SIZE	PERCENT PASSING (BY WEIGHT)
1"	100
¾"	90-[illegible]
NO. 4	0-15
NO. 200	0-4

TRENCH EXCAVATION MATERIAL

ACCEPTABLE TRENCH EXCAVATION MATERIAL SHALL BE THAT MATERIAL WHICH IS FREE FROM VEGETABLE MATTER AND REFUSE AND SHALL CONTAIN NO CONCRETE, STONES OR CLODS LARGER THAN ¾" IN DIAMETER AND SHALL CONTAIN SUFFICIENT FINES SO THAT ALL VOIDS WILL BE FILLED WHEN COMPACTED.

Date 3/15/17 Detail No. 18B Approved By PAUL R. ELDREDGE, RCE 60211	UNION SANITARY DISTRICT	SEWER PIPE INSTALLATION (TRENCH BACKFILL MATERIALS)	18B

NOTE TO ENGINEER OR ARCHITECT
PROVIDE 3" ELEVATION DROP BETWEEN INLET AND OUTLET PIPES THROUGH BOX. SHOW PIPE INVERT ELEVATIONS AT INLET AND OUTLET ON PLAN

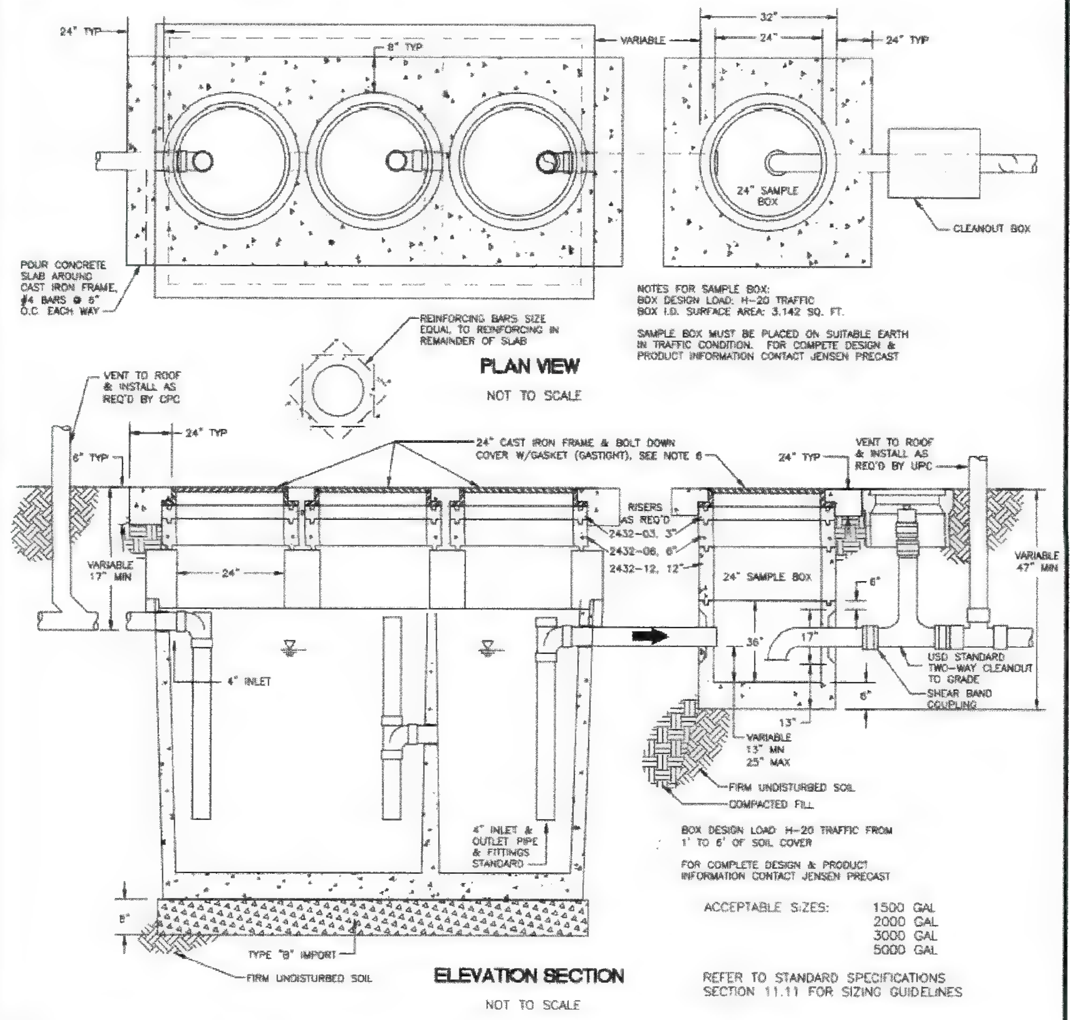

BOX DESIGN LOAD H-20 TRAFFIC FROM 1' TO 6' OF SOIL COVER

FOR COMPLETE DESIGN & PRODUCT INFORMATION CONTACT JENSEN PRECAST

ACCEPTABLE SIZES: 1500 GAL, 2000 GAL, 3000 GAL, 5000 GAL

REFER TO STANDARD SPECIFICATIONS SECTION 11.11 FOR SIZING GUIDELINES

NOTES.

1. ALL CONCRETE SHALL HAVE A MINIMUM COMPRESSIVE STRENGTH OF 3000 PSI AT 28 DAYS.
2. CIRCULAR LIDS SHALL BE SOUTH BAY FOUNDRY 1900-80 OR APPROVED EQUAL, WITH RAISED "S" OR "SANITARY SEWER"
3. TANK TO BE PLACED ON TYPE "B" IMPORT.
4. HEIGHT OF TANK ABOVE FITTINGS IS VARIABLE. 6 OR 12 INCH SECTIONS MAY BE ADDED TO REACH THE REQUIRED FINISHED GRADE. MORTAR AND BAND BOTH SIDES IN FIELD.
5. ALL CONCRETE JOINTS SHALL BE CLEANED, WETTED AND MORTARED PRIOR TO SETTING NEXT SECTION. THE JOINTS SHALL BE PACKED, TROWELED AND BANDED SMOOTH ON BOTH SIDES OF THE BOX.
6. BOLT EACH OF THE THREE (3) COMPARTMENT COVERS DOWN TO FRAME WITH NOT LESS THAN TWO (2) ⅜" HEX HEAD STEEL BOLTS.
7. UNLESS OTHERWISE APPROVED BY THE CITY OF JURISDICTION, A VENT WILL BE REQUIRED ON THE INLET SIDE OF THE INTERCEPTOR WHEN ITS DISTANCE FROM THE VENT SYSTEM WITHIN THE BUILDING IS GREATER THAN 10 FEET. VENT PIPES ON THE INLET SIDE AND THE OUTLET SIDE MAY BE INSTALLED SEPARATELY OR COMBINED IN CONFORMANCE WITH THE UNIFORM PLUMBING CODE.
8. STRUCTURE SHALL BE MANUFACTURED BY JENSEN PRECAST OR APPROVED EQUAL.
9. PLUMBING THROUGH THE INTERCEPTOR SHALL MATCH LATERAL SIZE.
10. SEE JENSEN PRECAST, OR APPROVED EQUAL, FOR DIMENSIONS OR EQUIVALENT TANK WITH PRIOR APPROVAL OF THE ENGINEER. MAXIMUM TANK SIZE SHALL BE 5,000 GALLONS. MULTIPLE TANKS SHALL BE USED FOR INTERCEPTORS REQUIRING MORE THAN 5,000 GALLON VOLUME.

Date 3/15/17 Detail No. 21 Approved By PAUL R. ELDREDGE, RCE 60211	UNION SANITARY DISTRICT	GREASE INTERCEPTOR	21

(1) GREASE INTERCEPTOR INSTALLATION DETAIL*

SCALE: N.T.S.

* DETAILS SHOWN FOR REFERENCE ONLY. SEE CIVIL PLAN FOR FINAL CONSTRUCTION REQUIREMENTS. ALL INSTALLATION SHALL CONFORM WITH USD REQUIREMENTS.

CO-AR DESIGN, INC.
680 Brea Canyon Rd., Ste. 178
Diamond Bar, CA 91789

Office: 909 598-0186
http:\\www.coardesign.com

Dennis J. Lee, Architect
dennisl@coardesign.com

THESE DRAWINGS ARE THE PROPERTY OF THE ARCHITECT. THE DESIGNS SHOWN AND DESCRIBED HERIN INCLUDING ALL TECHNICAL DRAWINGS ARE PROPRIETARY AND CANNOT BE COPIED, DUPLICATED OR COMMERCIALLY EXPLOITED, IN WHOLE OR IN PART. THE DRAWINGS AND SPECIFICATIONS SHALL NOT BE USED BY THE OWNER ON OTHER PROJECTS, FOR ADDITIONS TO THIS PROJECT, OR FOR COMPLETION OF THIS PROJECT BY OTHERS. THE OWNER AGREES TO HOLD HARMLESS, INDEMNIFY AND DEFEND THE ARCHITECT AGAINST ALL DAMAGES, CLAIMS AND LOSSES, INCLUDING DEFENSE COSTS, ARISING OUT OF ANY REUSE OF THE PLANS AND SPECIFICATIONS WITHOUT THE WRITTEN AUTHORIZATION OF THE ARCHITECT OF RECORD

COPYRIGHT © 2022 CO AR DESIGN, INC., ALL RIGHTS RESERVED.

SEAL:

REGISTERED PROFESSIONAL ENGINEER
JIA HUI PAN
M35374
EXP. 6/30/23
MECHANICAL
STATE OF CALIFORNIA

NOTES:

JHP Engineering and Design Services Inc.
3103 Independence Drive
Livermore, CA 94551
TEL: 925-409-2508
CEL: 510-468-0613
FAX: 510-788-6039

PROJECT
SALTALK FREMONT KITCHEN TENANT IMPROVEMENT

42550 ALBRAE ST.,
FREMONT, CA 94538

CLIENT

SALTALK, INC.
3334 VICTOR CT.,
SANTA CLARA, CA 95054

SUBMITTALS/ REVISIONS

1	HEALTH/USD SUBMITTAL	04/01/2022
2	2ND BLD. SUBMITTAL △1	07/22/2022
3	3RD BLD. SUBMITTAL	08/30/2022
4	3RD USD SUBMITTAL	09/01/2022
5	2ND HEALTH SUBMITTAL	09/29/2022

PROJECT NO:	21127
SCALE:	AS SHOWN
DATE:	2/10/2022
DRAWN BY:	TL / YC
CHECKED BY:	JP

SHEET TITLE
PLUMBING DETAILS

SHEET NO:
P-0.4

Domestic Water Heating System

NRCC-PLB-E (Created 11/19) CALIFORNIA ENERGY COMMISSION

CERTIFICATE OF COMPLIANCE			NRCC-PLB-E
Project Name:	SALTALK FRMONT CENTRAL KITCHEN IMPROVEMENT	Report Page:	Page 1 of 6
Project Address:	42550 ALBRAE STREET, FREMONT, CA 94538	Date Prepared:	2022-03-19

This document is used to demonstrate compliance for nonresidential occupancies with requirements in §110.1, §110.3, §120.3, and §140.5, and with requirements in §141.0 for additions and alterations, for domestic water heating scopes using the prescriptive path. For high-rise residential and hotel/motel occupancies, compliance is demonstrated with requirements in §110.1, §110.3, §120.3, §150.0 and §150.1(c)8, and with requirements in §150.2 for additions and alterations.

A. GENERAL INFORMATION

01	Project Location (city)	FREMONT	02	Climate Zone	3
03	Occupancy Types Within Project (select all that apply):				
☐ Nonresidential		☐ High-Rise Residential		☐ Hotel/ Motel	
☐ State Building		☐ Healthcare Facility		☑ Other (Write In): Restaurant/Dining	

B. PROJECT SCOPE

Table Instructions: Include any domestic water heating systems that are within the scope of the permit application and are demonstrating compliance using the prescriptive paths outlined in §140.5, §150.1(c)8, and §141.0(a), or §141.0(b)2N for additions or alterations. Solar water heating systems should be documented on the NRCC-SRA compliance document. Combined hydronic water heating systems should be documented on the NRCC-MCH compliance document.

01	02	03		
My project consists of (check all that apply):	System Type[1,2]	System Components		
☑ New System (DHW system being installed for the first time in newly constructed building)	Central System (serving nonresidential spaces)	☑ Equipment	☑ Distribution	☑ Controls
☐ System Alteration (equipment, distribution or controls)		☐ Equipment	☐ Distribution	☐ Controls

[1] *FOOTNOTE: Point of use water heaters, or other non-central systems used to serve nonresidential spaces, are considered individual systems.*
[2] *Dwelling units refers to hotel/ motel guest rooms and units in a high-rise residential occupancy.*

C. COMPLIANCE RESULTS

Table Instructions: Table C will indicate if the project data input into the compliance document is compliant with water heating requirements. This table is not editable by the user. If this table says "DOES NOT COMPLY" or "COMPLIES with Exceptional Conditions" refer to Table D., or the table indicated as not compliant for guidance.

01	02	03	04
Domestic Hot Water Equipment	Distribution Systems	Controls	**Compliance Results**
(See Table F)	(See Table G)	(See Table H)	
Yes	Yes	Yes	**COMPLIES**

Domestic Water Heating System

NRCC-PLB-E (Created 11/19) CALIFORNIA ENERGY COMMISSION

CERTIFICATE OF COMPLIANCE			NRCC-PLB-E
Project Name:	SALTALK FRMONT CENTRAL KITCHEN IMPROVEMENT	Report Page:	Page 2 of 6
Project Address:	42550 ALBRAE STREET, FREMONT, CA 94538	Date Prepared:	2022-03-19

D. EXCEPTIONAL CONDITIONS

This table is auto-filled with uneditable comments because of selections made or data entered in tables throughout the form.

No exceptional conditions apply to this project.

E. ADDITIONAL REMARKS

This table includes remarks made by the permit applicant to the Authority Having Jurisdiction.

F. DOMESTIC HOT WATER EQUIPMENT

Table Instructions: Complete the following table to demonstrate compliance with mandatory equipment requirements in §110.1 and §110.3. For high-rise residential and hotel/ motel occupancies, compliance with prescriptive requirements in §150.1(c)8 must also be demonstrated and with §150.2 for addition and alteration scopes.

Equipment Schedule: Central Systems

07	08	09	10	11	12	13	14	15
Name or Item Tag	Equipment Type	Volume (gal)	Rated Input Capacity (Btu/h)	Rated Efficiency	Minimum Efficiency Required	Efficiency Unit	Designed Standby Loss[1]	Maximum Standby Loss[1]
WH-01	Gas Storage Water Heater	119	400	95	80	%	976	6,545.5
WH-02	Gas Storage Water Heater	119	400	95	80	%	976	6,545.5

[1] *FOOTNOTE: For gas water heaters/ boilers, standby loss is in BTUH. For electric storage water heaters, standby loss is in %/hr.*

Water Heating Equipment All Occupancies

	Yes	No	Not Applicable	Requirement
18	○	○	●	Unfired storage tank insulation shall have Internal + External ≥ R-16 OR External ≥ R-12. Label required per §110.3(c)3
19	○	○	●	New state buildings 60% of energy for service water heating from site solar energy or recovered energy per §110.3(c)5
20	○	○	●	Isolation valves for instantaneous water heater with input rating > 6.8 kBTUH or 2 kW has been specified per §110.3(c)6

G. DOMESTIC HOT WATER DISTRIBUTION SYSTEM

Table Instructions: Complete the following table to demonstrate compliance for nonresidential occupancies with distribution requirements in §120.3 and §140.5. For high-rise residential and hotel/motel occupancies, compliance is demonstrated with requirements in §110.3(c), §120.3, §150.0, §150.1.

Table Continued

Domestic Water Heating System

NRCC-PLB-E (Created 11/19) CALIFORNIA ENERGY COMMISSION

CERTIFICATE OF COMPLIANCE			NRCC-PLB-E
Project Name:	SALTALK FRMONT CENTRAL KITCHEN IMPROVEMENT	Report Page:	Page 3 of 6
Project Address:	42550 ALBRAE STREET, FREMONT, CA 94538	Date Prepared:	2022-03-19

Table Continued

Recirculation Loops in Central Systems Serving Dwelling Units or Nonresidential Spaces

	Yes	No	Not Applicable	Requirement
01	●	○	○	Air release valve or vertical pump installation per §110.3(c)4A
02	●	○	○	Check valve or similar located between recirculation pump and water heating equipment to prevent backflow per §110.3(c)4B
03	●	○	○	Hose bibb installed between pump and equipment and isolation valve between hose bibb and equipment per §110.3(c)4C
04	●	○	○	Isolation valves on both sides of the pump per §110.3(c)4D
05	●	○	○	Cold water and recirculation loop piping shall not be connected to the hot water storage tank drain port per §110.3(c)4E
06	●	○	○	Check valve installed on cold water supply between hot water system and next closest tee on cold water supply per §110.3(c)4F
07	○	○	●	For central systems serving multiple dwelling units, design includes two or more recirculation loops serving separate dwelling units per §150.1(c)8Bii unless building has ≤ 8 dwelling units.

Mandatory Pipe Insulation All Occupancies

12	☑	For systems serving nonresidential spaces, pipe insulation for the following applications is specified to comply with Table 120.3-A (see below) per §120.3: - Recirculating system piping, including supply and return piping of the water heater - The first 8 ft of hot and cold outlet piping for a nonrecirculating storage system - Pipes that are externally heated
13	☑	Insulation shall be protected from damage, including that due to sunlight, moisture, equipment maintenance, and wind. Insulation exposed to weather shall be installed with a cover suitable for outdoor service per §120.3(b) and §150.0(j)3

TABLE 120.3-A PIPE INSULATION THICKNESS

Fluid Temperature Range (°F)	Conductivity Range (Btu-in per hour per ft² per °F)	Insulation Mean Rating Temp (°F)	Nominal Pipe Diameter (in)		
			<1	1 to < 1.5	1.5 to < 4
			Minimum Insulation Required		
105-140	0.22-0.28	100	**1.0 in or R-7.7**	**1.5 in or R-12.5**	**1.5 in or R-11**

H. DOMESTIC HOT WATER SYSTEM CONTROLS

Table Instructions: Complete the following table to demonstrate compliance with controls requirements in §110.3 for all occupancies. For high-rise residential and hotel/motel occupancies, compliance is demonstrated with requirements in §150.1(c)8.

	Yes	No	Not Applicable	Requirement

Table Continued

Domestic Water Heating System

NRCC-PLB-E (Created 11/19) CALIFORNIA ENERGY COMMISSION

CERTIFICATE OF COMPLIANCE			NRCC-PLB-E
Project Name:	SALTALK FRMONT CENTRAL KITCHEN IMPROVEMENT	Report Page:	Page 4 of 6
Project Address:	42550 ALBRAE STREET, FREMONT, CA 94538	Date Prepared:	2022-03-19

Table Continued

01	●	○	○	Construction documents require manufacturer certification that service water-heating systems are equipped with automatic temperature controls capable of adjusting temperature settings per §110.3(a)
02	●	○	○	Systems with capacity > 167,000 BTUH equipped with outlet temperature controls per §110.3(c)1 unless covered by California Plumbing Code Section 613.0.
03	●	○	○	Controls for circulating pumps or electrical heat trace systems are capable of automatically turning off the system per §110.3(c)2 unless system serves healthcare facility.
04	○	○	●	For recirculation systems serving multiple dwelling units, design includes automatic pump controls per §150.1(c)8Bii, or §150.2 for additions or alterations
05	○	○	●	For recirculation systems serving individual dwelling units, design includes manual on/off controls as specified in Reference Appendix RA 4.4.9 per §150.1(c)8.
06	○	○	●	For replacement single heat pump water heaters serving individual dwelling units in climate zones 1-15, design includes communication interface that meets demand responsive control requirements of §110.12(a) per §150.2(b)1Hiii.

I. DECLARATION OF REQUIRED CERTIFICATES OF INSTALLATION

Table Instructions: Selections have been made based on information provided in previous tables of this document. If any selection needs to be changed, please explain why in Table E. Additional Remarks. These documents must be provided to the building inspector during construction and can be found online at https://www.energy.ca.gov/title24/2019standards/2019_compliance_documents/Nonresidential_Documents/NRCI/

YES	NO	Form/Title	Field Inspector	
			Pass	Fail
●		NRCI-PLB-01-E - Must be submitted for all buildings	☐	☐
○	●	NRCI-PLB-02-E - Must be submitted for high-rise residential and hotel/ motel central hot water distribution systems to be recognized for compliance.	☐	☐
○	●	NRCI-PLB-03-E - Must be submitted for high-rise residential and hotel/ motel single dwelling unit hot water distribution systems to be recognized for compliance.	☐	☐

J. DECLARATION OF REQUIRED CERTIFICATES OF ACCEPTANCE

There are no Certificates of Acceptance applicable to service water heating requirements.

Domestic Water Heating System

NRCC-PLB-E (Created 11/19) CALIFORNIA ENERGY COMMISSION

CERTIFICATE OF COMPLIANCE			NRCC-PLB-E
Project Name:	SALTALK FRMONT CENTRAL KITCHEN IMPROVEMENT	Report Page:	Page 5 of 6
Project Address:	42550 ALBRAE STREET, FREMONT, CA 94538	Date Prepared:	2022-03-19

K. DECLARATION OF REQUIRED CERTIFICATES OF VERIFICATION

Table Instructions: Selections have been made based on information provided in previous tables of this document. If any selection needs to be changed, please explain why in Table E. Additional Remarks. These documents must be completed by a HERS Rater and provided to the building inspector during construction. The final documents must be created by a HERS Providers registry, but drafts can be found online at https://www.energy.ca.gov/title24/2019standards/2019_compliance_documents/Nonresidential_Documents/NRCV/

YES	NO	Form/Title	Field Inspector	
			Pass	Fail
○	●	NRCV-PLB-21-H High-rise Residential Central Hot Water Distribution HERS Verification	☐	☐
○	●	NRCV-PLB-22-H High-rise Residential Individual Dwelling Unit Hot Water Distribution HERS Verification	☐	☐

Domestic Water Heating System

NRCC-PLB-E (Created 11/19) CALIFORNIA ENERGY COMMISSION

CERTIFICATE OF COMPLIANCE			NRCC-PLB-E
Project Name:	SALTALK FRMONT CENTRAL KITCHEN IMPROVEMENT	Report Page:	Page 6 of 6
Project Address:	42550 ALBRAE STREET, FREMONT, CA 94538	Date Prepared:	2022-03-19

DOCUMENTATION AUTHOR'S DECLARATION STATEMENT

I certify that this Certificate of Compliance documentation is accurate and complete

Documentation Author Name:	Jia Hui Pan	Documentation Author Signature:	
Company:	JHP Engineering and Design Services, Inc.	Signature Date:	2022-03-19
Address:	3103 Independence Drive,	CEA/ HERS Certification Identification (if applicable):	
City/State/Zip:	Livermore, CA 94551	Phone:	925-409-2508

RESPONSIBLE PERSON'S DECLARATION STATEMENT

I certify the following under penalty of perjury, under the laws of the State of California:

1. **The information provided on this Certificate of Compliance is true and correct.**
2. **I am eligible under Division 3 of the Business and Professions Code to accept responsibility for the building design or system design identified on this Certificate of Compliance (responsible designer)**
3. **The energy features and performance specifications, materials, components, and manufactured devices for the building design or system design identified on this Certificate of Compliance conform to the requirements of Title 24, Part 1 and Part 6 of the California Code of Regulations.**
4. **The building design features or system design features identified on this Certificate of Compliance are consistent with the information provided on other applicable compliance documents, worksheets, calculations, plans and specifications submitted to the enforcement agency for approval with this building permit application.**
5. **I will ensure that a completed signed copy of this Certificate of Compliance shall be made available with the building permit(s) issued for the building, and made available to the enforcement agency for all applicable inspections. I understand that a completed signed copy of this Certificate of Compliance is required to be included with the documentation the builder provides to the building owner at occupancy.**

Responsible Designer Name:	Jia Hui Pan	Responsible Designer Signature:	
Company :	JHP Engineering and Design Services, Inc.	Date Signed:	2022-03-19
Address:	3103 Independence Drive,	License:	M35374
City/State/Zip:	Livermore, CA 94551	Phone:	925-409-2508

Alameda County
Dept. of Environmental Health
Approved By: T. Tran

CO-AR DESIGN, INC.
680 Brea Canyon Rd., Ste. 178
Diamond Bar, CA 91789

Office: 909-598-0186
http:\\www.coardesign.com

Dennis J. Lee, Architect
dennisl@coardesign.com

THESE DRAWINGS ARE THE PROPERTY OF THE ARCHITECT. THE DESIGNS SHOWN AND DESCRIBED HERIN INCLUDING ALL TECHNICAL DRAWINGS ARE PROPRIETARY AND CANNOT BE COPIED, DUPLICATED OR COMMERCIALLY EXPLOITED, IN WHOLE OR IN PART. THE DRAWINGS AND SPECIFICATIONS SHALL NOT BE USED BY THE OWNER ON OTHER PROJECTS, FOR ADDITIONS TO THIS PROJECT, OR FOR COMPLETION OF THIS PROJECT BY OTHERS. THE OWNER AGREES TO HOLD HARMLESS, INDEMNIFY AND DEFEND THE ARCHITECT AGAINST ALL DAMAGES, CLAIMS AND LOSSES, INCLUDING DEFENSE COSTS, ARISING OUT OF ANY REUSE OF THE PLANS AND SPECIFICATIONS WITHOUT THE WRITTEN AUTHORIZATION OF THE ARCHITECT OF RECORD.

COPYRIGHT © 2022 CO-AR DESIGN, INC., ALL RIGHTS RESERVED

SEAL

REGISTERED PROFESSIONAL ENGINEER
JIA HUI PAN
M35374
EXP. 6/30/23
MECHANICAL
STATE OF CALIFORNIA

NOTES

JHP Engineering and Design Services Inc.
3103 Independence Drive
Livermore, CA 94551
TEL: 925-409-2508
CEL: 510-468-0613
FAX: 510-788-6039

PROJECT

SALTALK FREMONT KITCHEN TENANT IMPROVEMENT

42550 ALBRAE ST.,
FREMONT, CA 94538

CLIENT

SALTALK, INC.
3334 VICTOR CT.,
SANTA CLARA, CA 95054

SUBMITTALS/ REVISIONS

1	HEALTH/USD SUBMITTAL	04/01/2022
2	2ND BLD. SUBMITTAL	07/22/2022
3	3RD BLD. SUBMITTAL	08/30/2022
4	3RD USD. SUBMITTAL	09/01/2022
5	2ND HEALTH SUBMITTAL	09/29/2022

PROJECT NO	21127
SCALE:	AS SHOWN
DATE	2/10/2022
DRAWN BY	TL / YC
CHECKED BY	JP

SHEET TITLE

WATER HEATER TITLE 24 COMPLIANCE

SHEET NO

P-0.5

BIMcloud: COAR-CONFERENCE - BIMcloud Basic for ARCHICAD 25/202201-Fremont-Ghost Kitchen Thursday, February 10, 2022 1:47 PM

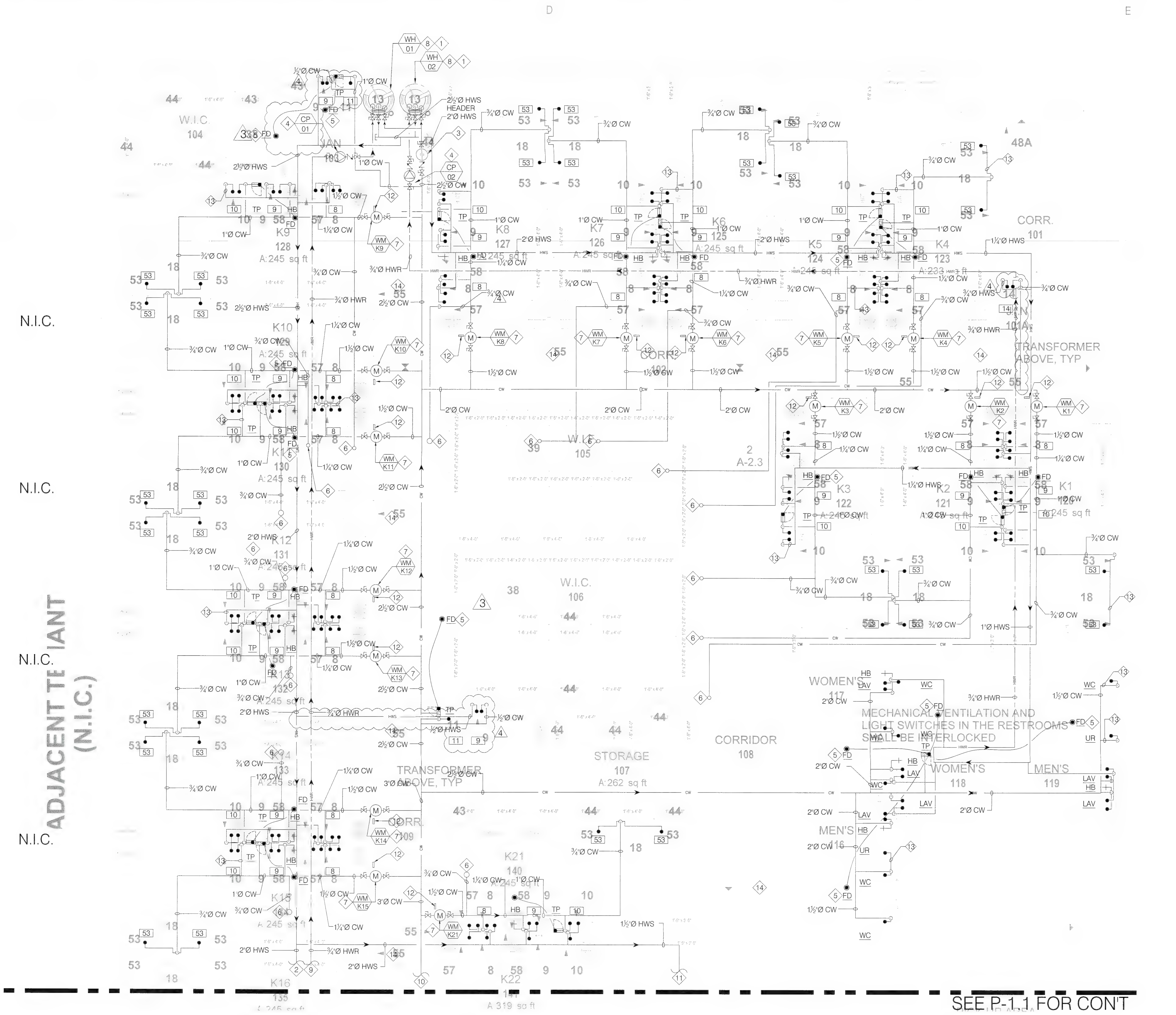

GROUND FLOOR DOMESTIC WATER PIPING PLAN - AREA A

SCALE: 1/4" = 1'-0"

GENERAL NOTES

1. PLUMBING CONTRACTOR IS RESPONSIBLE TO COORDINATE WITH STRUCTURAL ENGINEER/GC TO LOCATE ALL STRUCTURAL MEMBERS PRIOR TO EXCAVATE TO AVOID DAMAGING ANY EXISTING STRUCTURAL MEMBERS.

SHEET NOTES:

1. 119-GAL NATURAL GAS WATER HEATER ON 6" HIGH CONCRETE/ STEEL HOUSE KEEPING PAD WITH DRAIN PAN. SEE EQUIPMENT SCHEDULE FOR DETAILED REQUIREMENTS. ALSO SEE PIPING DIAGRAM FOR PIPING DETAIL.
2. 2"Ø HWS CONTINUES IN CEILING SPACE. SEE DWG.1/P-1.1 FOR CON'T.
3. HOT WATER THERMAL EXPANSION TANK. PROVIDE DRAINS TO EXPANSION TANK AND INDIRECTLY DISCHARGE TO MOP SINK. SEE EQUIPMENT SCHEDULE AND WATER HEATER PIPING DETAIL FOR MORE REQUIREMENTS.
4. HOT WATER CIRCULATION PUMP. SEE EQUIPMENT SCHEDULE FOR DETAIL.
5. PROVIDE CW TO FLOOR DRAIN FROM NEAR-BY TRAP PRIMMER DISTRIBUTION DEVICE. TYPICAL OF ALL.
6. ¾"Ø CW UP TO ROOF TO MAKE UP AIR UNITS. SEE DWG.1/PB-4.0 FOR CONTINUATION.
7. 1½" SUB-METER FOR DOMESTIC WATER USAGE WITH CONTROL WIRING TO DATA AND READING PANELS. SEE EQUIPMENT SCHEDULE FOR DETAILS.
8. PROVIDE 2"Ø CW AND 2"Ø HWS WITH DEDICATED ISOLATION VALVE TO WATER HEATER.
9. ¾"Ø HWR CONTINUES IN CEILING SPACE. SEE DWG.1/P-1.1 FOR CON'T.
10. 3"Ø CW CONTINUES IN CEILING SPACE. SEE DWG.1/P-1.1 FOR CON'T.
11. 1½"Ø HWS CONTINUES IN CEILING SPACE. SEE DWG.1/P-1.1 FOR CON'T.
12. PROPOSED SUB-WATER METER READING PANEL INSTALLED AT 8-FT AFF.. COORDINATE W/OWNER AND LANDLORD"S REQUIREMENT PRIOR TO INSTALL. TYP. OF ALL KITCHEN.
13. PROVIDE PIPE SIZE PER TABLE FOR MIN. PLUMBING FIXTURE BRANCH PIPE SIZE SHOW ON PB-0.3. TYPICAL OF ALL. UNLESS NOTED OTHERWISE.
14. ELECTRICAL TRANSFORMER SHOWN FOR REFERENCE ONLY. NO PIPING ALLOW ABOVE TRANSFORMER. PLUMBING CONTRACTOR TO COORDINATE WITH ELECTRICAL PRIOR TO CONSTRUCT. TYP. OF ALL.

AREA OF WORK

KEY MAP

SCALE: 1/8" = 1'-0"

CO-AR DESIGN, INC.
680 Brea Canyon Rd., Ste. 178
Diamond Bar, CA 91789

Office: 909-598-0186
http:\\www.coardesign.com

Dennis J. Lee, Architect
dennisl@coardesign.com

THESE DRAWINGS ARE THE PROPERTY OF THE ARCHITECT. THE DESIGNS SHOWN AND DESCRIBED HERIN INCLUDING ALL TECHNICAL DRAWINGS ARE PROPRIETARY AND CANNOT BE COPIED, DUPLICATED OR COMMERCIALLY EXPLOITED, IN WHOLE OR IN PART. THE DRAWINGS AND SPECIFICATIONS SHALL NOT BE USED BY THE OWNER ON OTHER PROJECTS, FOR ADDITIONS TO THIS PROJECT, OR FOR COMPLETION OF THIS PROJECT BY OTHERS. THE OWNER AGREES TO HOLD HARMLESS, INDEMNIFY AND DEFEND THE ARCHITECT AGAINST ALL DAMAGES, CLAIMS AND LOSSES, INCLUDING DEFENSE COSTS, ARISING OUT OF ANY REUSE OF THE PLANS AND SPECIFICATIONS WITHOUT THE WRITTEN AUTHORIZATION OF THE ARCHITECT OF RECORD.

COPYRIGHT © 2022 CO-AR DESIGN, INC., ALL RIGHTS RESERVED.

SEAL

REGISTERED PROFESSIONAL ENGINEER
JIA HUI PAN
M35374
EXP. 6/30/23
MECHANICAL
STATE OF CALIFORNIA

NOTES

JHP Engineering and Design Services Inc.
3103 Independence Drive
Livermore, CA 94551
TEL: 925-409-2508
CEL: 510-468-0613
FAX: 510-788-6039

PROJECT:

SALTALK FREMONT KITCHEN TENANT IMPROVEMENT

42550 ALBRAE ST.,
FREMONT, CA 94538

CLIENT

SALTALK, INC.
3334 VICTOR CT.,
SANTA CLARA, CA 95054

SUBMITTALS/ REVISIONS

1	HEALTH/USD SUBMITTAL	04/01/2022
2	2ND BLD. SUBMITTAL	07/22/2022
3	3RD BLD. SUBMITTAL	08/30/2022
4	3RD USD. SUBMITTAL 3	09/01/2022
5	2ND HEALTH SUBMITTAL 4	09/29/2022

PROJECT NO	21127
SCALE:	AS SHOWN
DATE:	2/10/2022
DRAWN BY	TL / YC
CHECKED BY:	JP

SHEET TITLE

GROUND FLOOR DOMESTIC WATER PIPING PLAN - AREA A

SHEET NO

P-1.0

BIMcloud: COAR CONFERENCE - BIMcloud Basic for ARCHICAD 25/202201-Fremont Ghost Kitchen, Thursday, February 10, 2022 1:47 PM

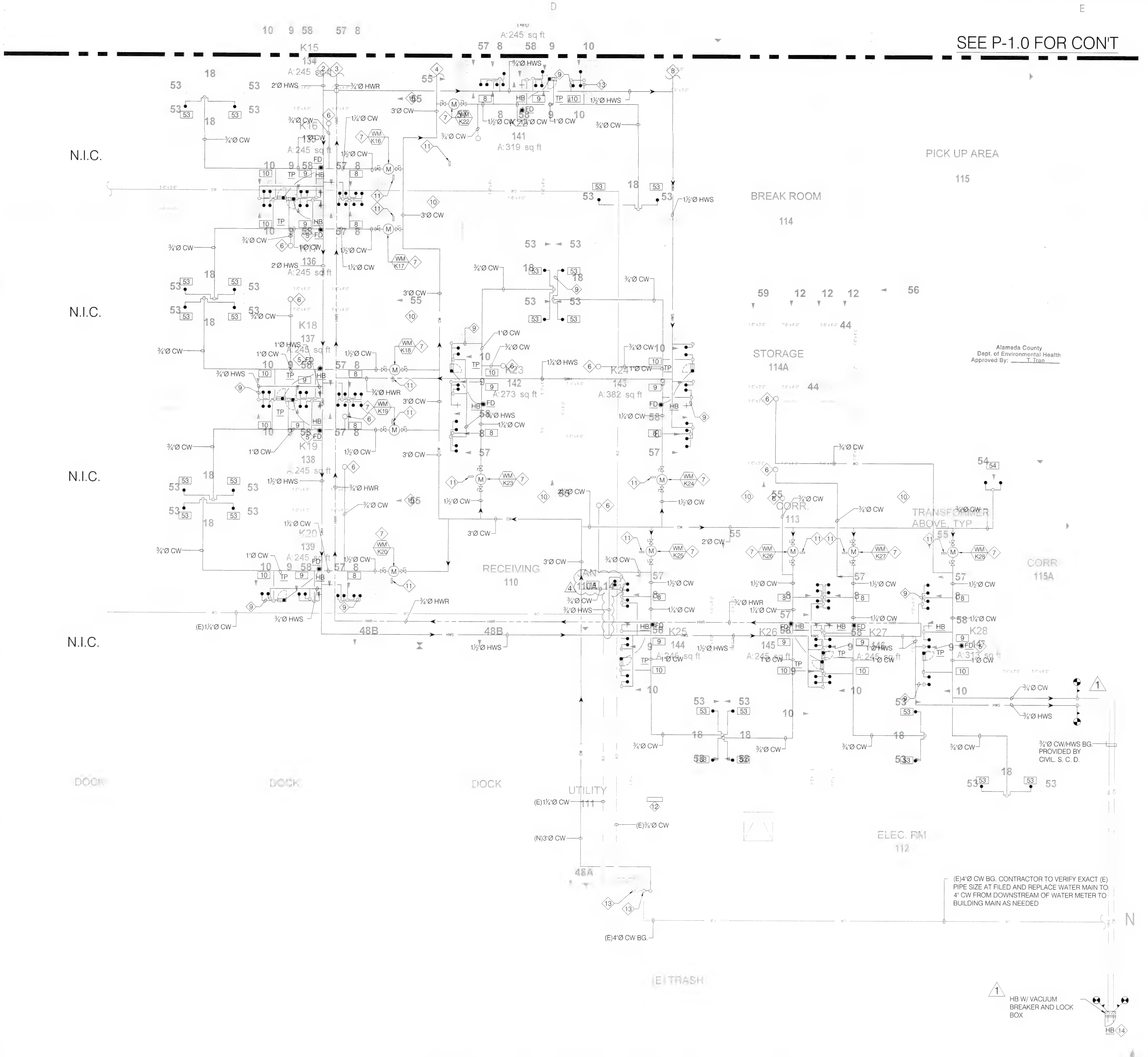

GROUND FLOOR DOMESTIC WATER PIPING PLAN - AREA B

GENERAL NOTES

1. PLUMBING CONTRACTOR IS RESPONSIBLE TO COORDINATE WITH STRUCTURAL ENGINEER/GC TO LOCATE ALL STRUCTURAL MEMBERS PRIOR TO EXCAVATE TO AVOID DAMAGING ANY EXISTING STRUCTURAL MEMBERS.

SHEET NOTES:

1. CONNECT (N) 3"Ø CW MAIN TO (E) 4"Ø CW UP FROM BELOW GRADE. CONTRACTOR IS TO VERIFY EXACT PIPE SIZE AND LOCATION OF (E) UTILITIES PRIOR TO CONSTRUCTION AND REPORT TO ARCHITECT/ENGINEER FOR DISCREPANCIES OBSERVED IN FIELD.
2. 2"Ø HWS CONTINUES IN CEILING SPACE. SEE DWG.1/P-1.0 FOR CON'T.
3. ¾"Ø HWR CONTINUES IN CEILING SPACE. SEE DWG.1/P-1.0 FOR CON'T.
4. 3"Ø CW CONTINUES IN CEILING SPACE. SEE DWG.1/P-1.0 FOR CON'T.
5. PROVIDE CW TO FLOOR DRAIN AND TRENCH DRAIN FROM NEAR-BY TRAP PRIMMER DISTRIBUTION DEVICE. TYPICAL OF ALL.
6. ¾"Ø CW UP TO ROOF TO MAKE UP AIR UNITS. SEE DWG.1/PB-4.1 FOR CONTINUATION.
7. 1½" SUB-METER FOR DOMESTIC WATER USAGE WITH CONTROL WIRING TO DATA AND READING PANELS. SEE EQUIPMENT SCHEDULE FOR DETAILS.
8. 1½"Ø HWS CONTINUES IN CEILING SPACE. SEE DWG.1/P-1.0 FOR CON'T.
9. PROVIDE PIPE SIZE PER TABLE FOR MIN. PLUMBING FIXTURE BRANCH PIPE SIZE SHOW ON PB-0.3. TYPICAL OF ALL. UNLESS NOTED OTHERWISE.
10. ELECTRICAL TRANSFORMER SHOWN FOR REFERENCE ONLY. NO PIPING ALLOW ABOVE TRANSFORMER. PLUMBING CONTRACTOR TO COORDINATE WITH ELECTRICAL PRIOR TO CONSTRUCT. TYP. OF ALL.
11. PROPOSED SUB-WATER METER READING PANEL INSTALLED AT 8-FT AFF.. COORDINATE W/OWNER AND LANDLORD"S REQUIREMENT PRIOR TO INSTALL. TYP. OF ALL KITCHEN.
12. WATER SUB-METERING DATA PANEL. COORDINATE WITH ELECTRICAL FOR 120V CONVENIENT POWER OUTLET. SEE EQUIPMENT SCHEDULE FOR DETAILS.
13. RECONNECT (E) CW WATER LINE WITH LINE SIZED SHUT-OFF VALVE TO (N)3" CW RISER WITHOUT SERVICE INTERRUPTION TO ADJACENT TENANTS. CONTRACTOR TO VERIFY EXACT LOCATION AT FIELD AND COORDINATE WITH LANDLORD AND ADJACENT TENANT PRIOR TO SWITCH. TYPICAL.
14. PROVIDE HOSE BIBB WITH LOCKABLE PANEL AND VACUUM BREAK AT BOTH HOT AND COLD WATER HOSE BIBBS.

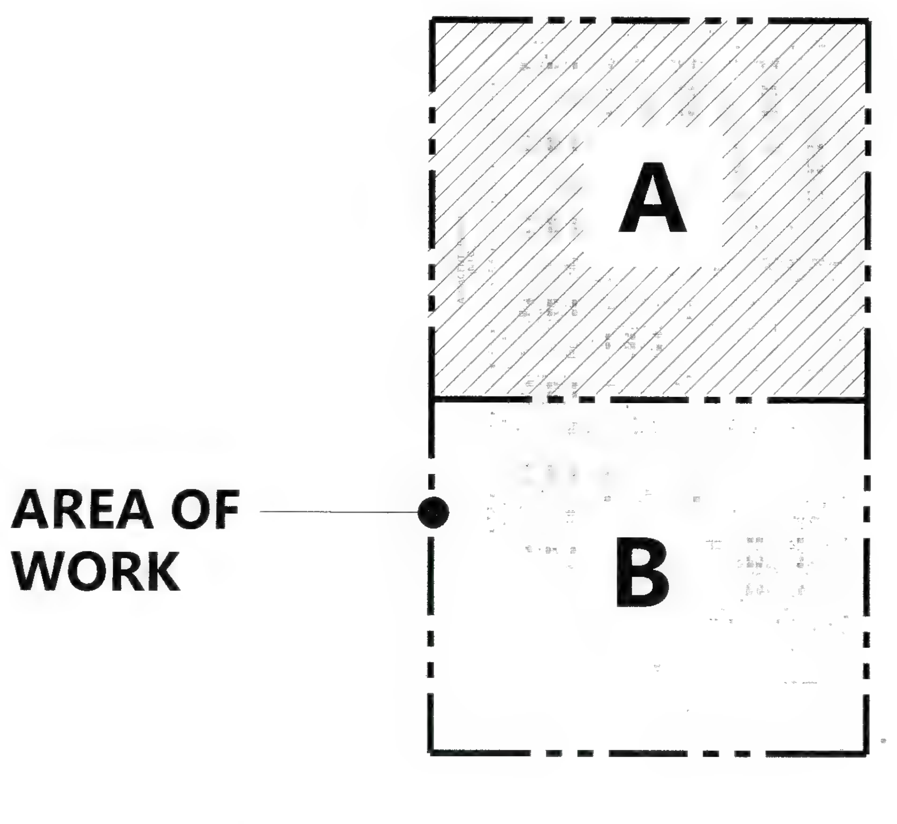

KEY MAP

CO-AR DESIGN, INC.
680 Brea Canyon Rd., Ste. 178
Diamond Bar, CA 91789

Office: 909-598-0186
http:\\www.coardesign.com

Dennis J. Lee, Architect
dennisl@coardesign.com

THESE DRAWINGS ARE THE PROPERTY OF THE ARCHITECT. THE DESIGNS SHOWN AND DESCRIBED HERIN INCLUDING ALL TECHNICAL DRAWINGS ARE PROPRIETARY AND CANNOT BE COPIED, DUPLICATED OR COMMERCIALLY EXPLOITED, IN WHOLE OR IN PART. THE DRAWINGS AND SPECIFICATIONS SHALL NOT BE USED BY THE OWNER ON OTHER PROJECTS, FOR ADDITIONS TO THIS PROJECT, OR FOR COMPLETION OF THIS PROJECT BY OTHERS. THE OWNER AGREES TO HOLD HARMLESS, INDEMNIFY AND DEFEND THE ARCHITECT AGAINST ALL DAMAGES, CLAIMS AND LOSSES, INCLUDING DEFENSE COSTS, ARISING OUT OF ANY REUSE OF THE PLANS AND SPECIFICATIONS WITHOUT THE WRITTEN AUTHORIZATION OF THE ARCHITECT OF RECORD.

COPYRIGHT © 2022 CO-AR DESIGN, INC., ALL RIGHTS RESERVED

SEAL

REGISTERED PROFESSIONAL ENGINEER
JIA HUI YAN
M35374
EXP. 6/30/23
MECHANICAL
STATE OF CALIFORNIA

NOTES

JHP Engineering and Design Services Inc.
3103 Independence Drive
Livermore, CA 94551
TEL: 925-409-2508
CEL: 510-468-0613
FAX: 510-788-6039

PROJECT:
SALTALK FREMONT KITCHEN TENANT IMPROVEMENT

42550 ALBRAE ST.,
FREMONT, CA 94538

CLIENT

SALTALK, INC.
3334 VICTOR CT.,
SANTA CLARA, CA 95054

SUBMITTALS/ REVISIONS.

1	HEALTH/USD SUBMITTAL	04/01/2022
2	2ND BLD. SUBMITTAL △1	07/22/2022
3	3RD BLD SUBMITTAL	08/30/2022
4	3RD USD. SUBMITTAL	09/01/2022
5	2ND HEALTH SUBMITTAL △4	09/29/2022

PROJECT NO	21127
SCALE	AS SHOWN
DATE	2/10/2022
DRAWN BY	TL / YC
CHECKED BY	JP

SHEET TITLE
GROUND FLOOR DOMESTIC WATER PIPING PLAN - AREA B

SHEET NO
P-1.1

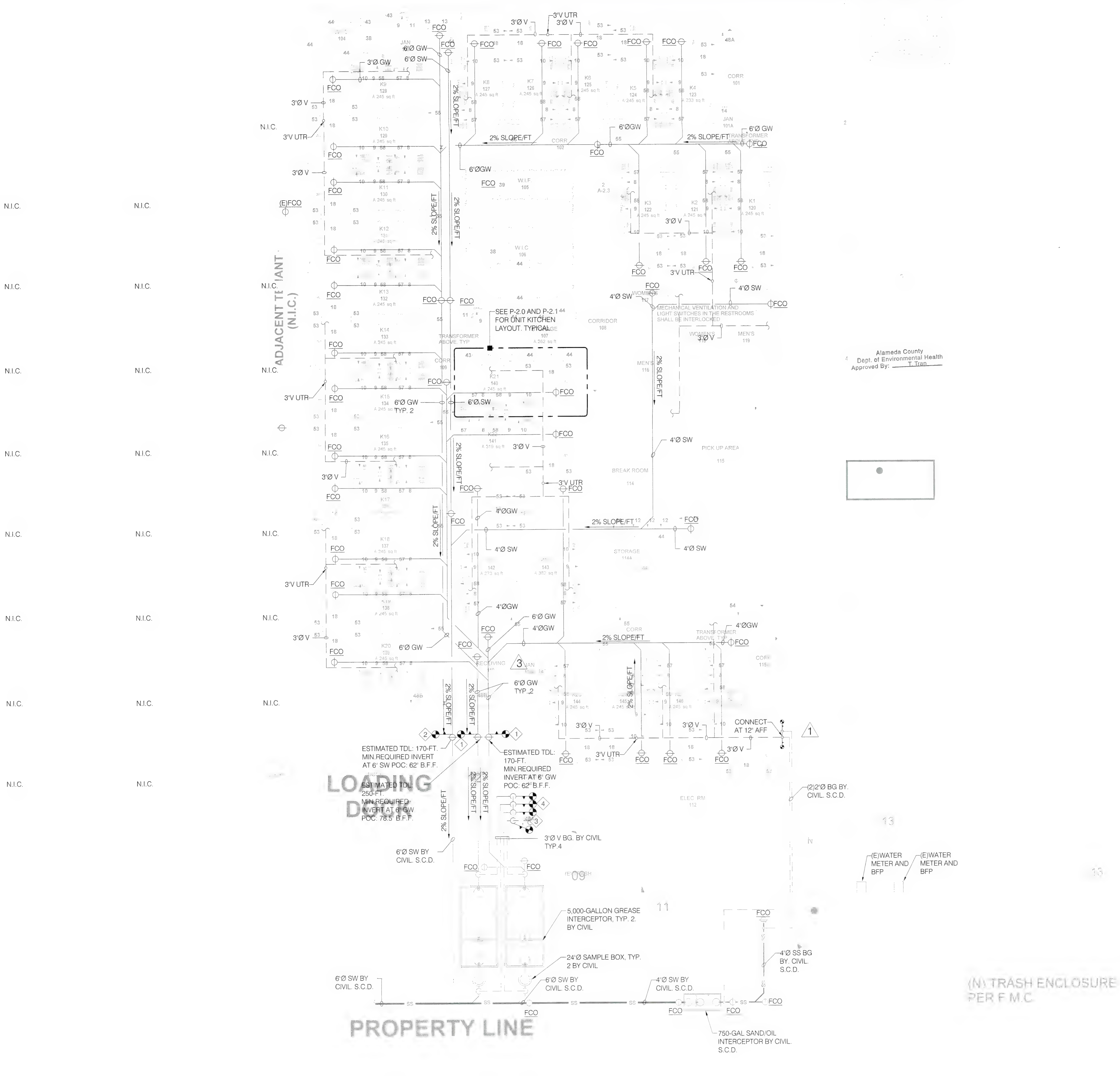

1 OVERALL GROUND FLOOR WASTE AND VENT PIPING PLAN
SCALE: 1/8" = 1'-0"

GENERAL NOTES

1. LOCATION AND INVERT OF SANITARY AND GREASE WASTE LATERALS ARE SHOWN BASED ON ESTIMATION. PLUMBING CONTRACTOR IS RESPONSIBLE TO VERIFY EXACT LOCATION, SIZE, INVERT, AND CONDITION OF PIPE ROUTE AND CONFIRM THE CONTRACTIBILITY OF PROPOSED SYSTEM PRIOR TO CONSTRUCT. REPORT TO ENGINEER / ARCHITECT FOR ANY DISCREPANCY OBSERVED.
2. PLUMBING CONTRACTOR IS RESPONSIBLE TO COORDINATE WITH STRUCTURAL ENGINEER/GC TO LOCATE ALL STRUCTURAL MEMBERS PRIOR TO EXCAVATE TO AVOID DAMAGING ANY EXISTING STRUCTURAL MEMBERS.

SHEET NOTES:

1. (N) 6"Ø GW CONNECT TO (E) 6"GW POC BY CILVIL. CONTRACTOR IS RESPONSIBLE TO VERIFY EXACT LOCATION, SIZE, AND INVERT OF POC AND CONFIRM CONSTRUCTABILITY OF PROPOSED PIPING LAYOUT PRIOR TO CONSTRUCT.
2. (N) 6"Ø SW CONNECT TO (E) 6"SW POC BY CILVIL. CONTRACTOR IS RESPONSIBLE TO VERIFY EXACT LOCATION, SIZE, AND INVERT OF POC AND CONFIRM CONSTRUCTABILITY OF PROPOSED PIPING LAYOUT PRIOR TO CONSTRUCT.
3. (N) 4"Ø V CONTINUES TO ROOF. SEE DWG.1/P-2.2 FOR CONTINUATION.
4. PLUMBING TO PROVIDE FOUR (3) 3"Ø V BELOW GRADE FOR CONNECTION OF VENT PIPE FROM GI BY CIVIL. MANIFOLD VENT PIPES AT MIN. 6" ABOVE GRADE.

CO-AR DESIGN, INC.
680 Brea Canyon Rd., Ste. 178
Diamond Bar, CA 91789

Office: 909-598-0186
http:\\www.coardesign.com

Dennis J. Lee, Architect
dennisl@coardesign.com

THESE DRAWINGS ARE THE PROPERTY OF THE ARCHITECT. THE DESIGNS SHOWN AND DESCRIBED HERIN INCLUDING ALL TECHNICAL DRAWINGS ARE PROPRIETARY AND CANNOT BE COPIED, DUPLICATED OR COMMERCIALLY EXPLOITED, IN WHOLE OR IN PART. THE DRAWINGS AND SPECIFICATIONS SHALL NOT BE USED BY THE OWNER ON OTHER PROJECTS, FOR ADDITIONS TO THIS PROJECT, OR FOR COMPLETION OF THIS PROJECT BY OTHERS. THE OWNER AGREES TO HOLD HARMLESS, INDEMNIFY AND DEFEND THE ARCHITECT AGAINST ALL DAMAGES, CLAIMS AND LOSSES, INCLUDING DEFENSE COSTS, ARISING OUT OF ANY REUSE OF THE PLANS AND SPECIFICATIONS WITHOUT THE WRITTEN AUTHORIZATION OF THE ARCHITECT OF RECORD.

COPYRIGHT © 2022 CO-AR DESIGN, INC., ALL RIGHTS RESERVED.

SEAL:

REGISTERED PROFESSIONAL ENGINEER
JIA HUI PAN
M35374
EXP 6/30/23
MECHANICAL
STATE OF CALIFORNIA

NOTES:

JHP Engineering and Design Services Inc.
3103 Independence Drive
Livermore, CA 94551
TEL: 925-409-2508
CEL: 510-468-0613
FAX: 510-788-6039

PROJECT
SALTALK FREMONT KITCHEN TENANT IMPROVEMENT

42550 ALBRAE ST.,
FREMONT, CA 94538

CLIENT

SALTALK, INC.
3334 VICTOR CT.,
SANTA CLARA, CA 95054

SUBMITTALS/ REVISIONS

1	HEALTH/USD SUBMITTAL	04/01/2022
2	2ND BLD. SUBMITTAL 1	07/22/2022
3	3RD BLD. SUBMITTAL	08/30/2022
4	3RD USD. SUBMITTAL 3	09/01/2022
5	2ND HEALTH SUBMITTAL	09/29/2022

PROJECT NO	21127
SCALE	AS SHOWN
DATE	2/10/2022
DRAWN BY	TL / YC
CHECKED BY	JP

SHEET TITLE
OVERALL WASTE AND VENT PIPING PLAN

SHEET NO
P-2.0

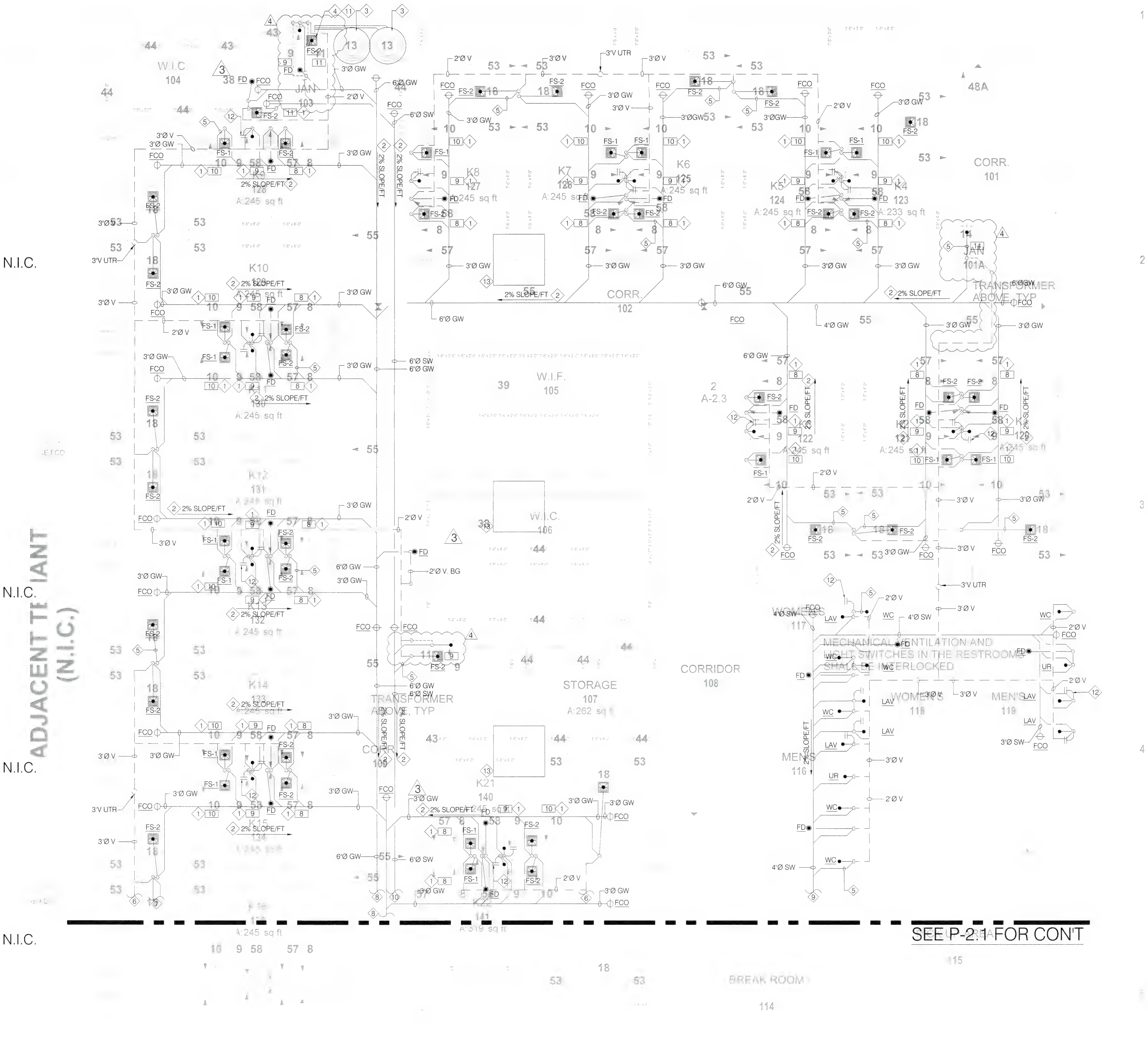

Alameda County
Dept. of Environmental Health
Approved By: T. Tran

1 GROUND FLOOR WASTE AND VENT PIPING PLAN- AREA A

SCALE: 1/4" = 1'-0"

GENERAL NOTES

1. PLUMBING CONTRACTOR IS RESPONSIBLE TO COORDINATE WITH STRUCTURAL ENGINEER/GC TO LOCATE ALL STRUCTURAL MEMBERS PRIOR TO EXCAVATE TO AVOID DAMAGING ANY EXISTING STRUCTURAL MEMBERS.

SHEET NOTES:

1. DRAINAGE OF PLUMBING FIXTURE OR EQUIPMENT SHALL BE INDIRECTLY DISCHARGED TO NEARBY FLOOR SINK AND TERMINATED AT 1" ABOVE FLOOD RIM.
2. ALL HORIZONTAL SANITARY AND GREASE WASTE AND VENT PIPES SHALL BE INSTALLED TO MAINTAIN A MINIMUM ¼" PER-FOOT-DROP OR 2% SLOPED TOWARD DISCHARGE. TYPICAL OF ALL.
3. PLUMBING CONTRACTOR TO PROVIDE DRAIN TO T&PS, DRAIN PANS, AND EXPANSION TANK OF WATER HEATER TO NEARBY MOP SINK. DISCHARGE DRAIN INDIRECTLY AT 1" ABOVE FLOOD RIM. SEE WATER HEATER PIPING DETAIL FOR FURTHER REQUIREMENTS.
4. WATER HEATER DRAIN DISCHARGE DOWN TO NEARBY FLOOR SINK.
5. PROVIDE DRAIN AND VENT PIPE PER SIZE SHOWN ON "PLUMBING FIXTURE BRANCH PIPE SIZE TABLE" SHOWN ON PB-0.3, U.N.O. TYPICAL OF ALL.
6. 3"Ø V CONTINUES IN CEILING SPACE. SEE DWG.1/ P-2.1 FOR CONTINUATION.
7. 2"Ø GW CONTINUES BELOW GRADE TO FLOOR SINK. SEE DWG.1/ P-2.1 FOR CONTINUATION.
8. 6"Ø GW CONTINUES BELOW GRADE. SEE DWG.1/ P-2.1 FOR CONTINUATION.
9. 4"Ø SW CONTINUES BELOW GRADE. SEE DWG.1/ P-2.1 FOR CONTINUATION.
10. 6"Ø SW CONTINUES BELOW GRADE. SEE DWG.1/ P-2.1 FOR CONTINUATION.
11. PROVIDE DRAIN PAN W/ DEDICATED ¾" DRAIN TO EACH WATER HEATER AND DISCHARGE TO NEARBY FLOOR SINK. 4
12. PROVIDE WALL CLEAN-OUT ABOVE EACH FIXTURE CONNECTION FITTING. TYPICAL OF ALL.
13. (E)COLUMN CAP FOUNDATION LOCATION. CONTRACTOR TO VERIFY EXACT SIZE OF FOUNDATION AT FIELD PRIOR TO EXCAVATE - DO NOT DAMAGE COLUMN CAP AND CONFIRM WITH SEOR FOR EXACT CLEARANCE TO MAINTAIN. TYPICAL OF ALL. 1

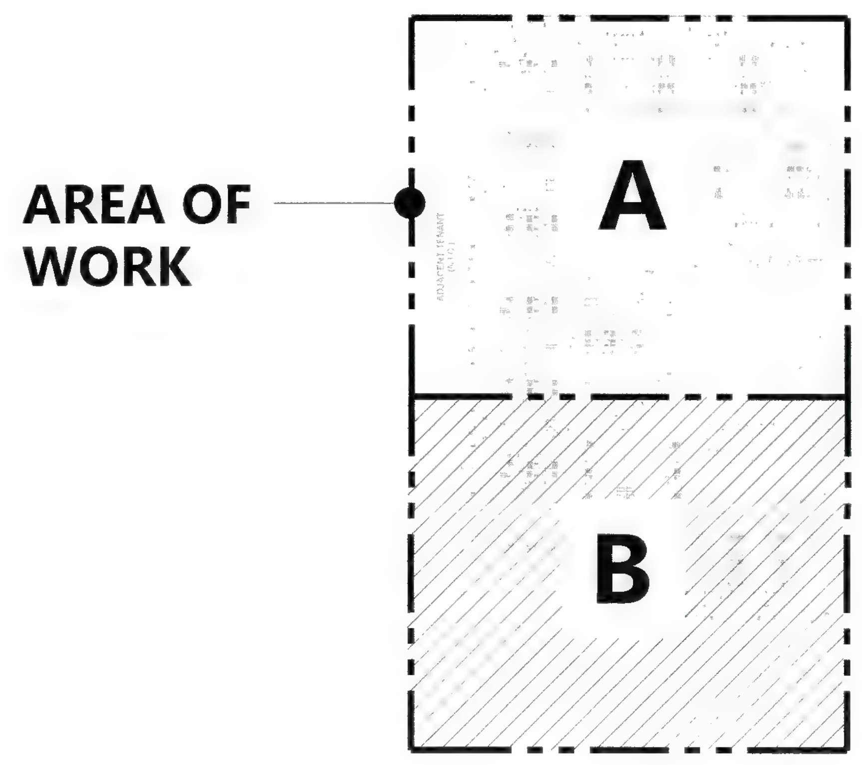

1 KEY MAP

SCALE: 1/8" = 1'-0"

CO-AR DESIGN, INC.
680 Brea Canyon Rd., Ste. 178
Diamond Bar, CA 91789

Office: 909-598-0186
http:\\www.coardesign.com

Dennis J. Lee, Architect
dennisl@coardesign.com

THESE DRAWINGS ARE THE PROPERTY OF THE ARCHITECT. THE DESIGNS SHOWN AND DESCRIBED HERIN INCLUDING ALL TECHNICAL DRAWINGS ARE PROPRIETARY AND CANNOT BE COPIED, DUPLICATED OR COMMERCIALLY EXPLOITED, IN WHOLE OR IN PART. THE DRAWINGS AND SPECIFICATIONS SHALL NOT BE USED BY THE OWNER ON OTHER PROJECTS, FOR ADDITIONS TO THIS PROJECT, OR FOR COMPLETION OF THIS PROJECT BY OTHERS. THE OWNER AGREES TO HOLD HARMLESS, INDEMNIFY AND DEFEND THE ARCHITECT AGAINST ALL DAMAGES, CLAIMS AND LOSSES, INCLUDING DEFENSE COSTS, ARISING OUT OF ANY REUSE OF THE PLANS AND SPECIFICATIONS WITHOUT THE WRITTEN AUTHORIZATION OF THE ARCHITECT OF RECORD.

COPYRIGHT © 2022 CO-AR DESIGN, INC., ALL RIGHTS RESERVED.

SEAL

REGISTERED PROFESSIONAL ENGINEER
JIA HUI PAN
M35374
EXP. 6/30/23
MECHANICAL
STATE OF CALIFORNIA

NOTES:

JHP Engineering and Design Services Inc.
3103 Independence Drive
Livermore, CA 94551
TEL: 925-409-2508
CEL: 510-468-0613
FAX: 510-788-6039

PROJECT

SALTALK FREMONT KITCHEN TENANT IMPROVEMENT

42550 ALBRAE ST.,
FREMONT, CA 94538

CLIENT:

SALTALK, INC.
3334 VICTOR CT.,
SANTA CLARA, CA 95054

SUBMITTALS/ REVISIONS

1	HEALTH/USD SUBMITTAL	04/01/2022
2	2ND BLD. SUBMITTAL 1	07/22/2022
3	3RD BLD. SUBMITTAL	08/30/2022
4	3RD USD. SUBMITTAL 3	09/01/2022
5	2ND HEALTH SUBMITTAL 4	09/29/2022

PROJECT NO	21127
SCALE	AS SHOWN
DATE	2/10/2022
DRAWN BY	TL / YC
CHECKED BY	JP

SHEET TITLE

GROUND FLOOR WAST AND VENT PIPING PLAN - AREA A

SHEET NO

P-2.1

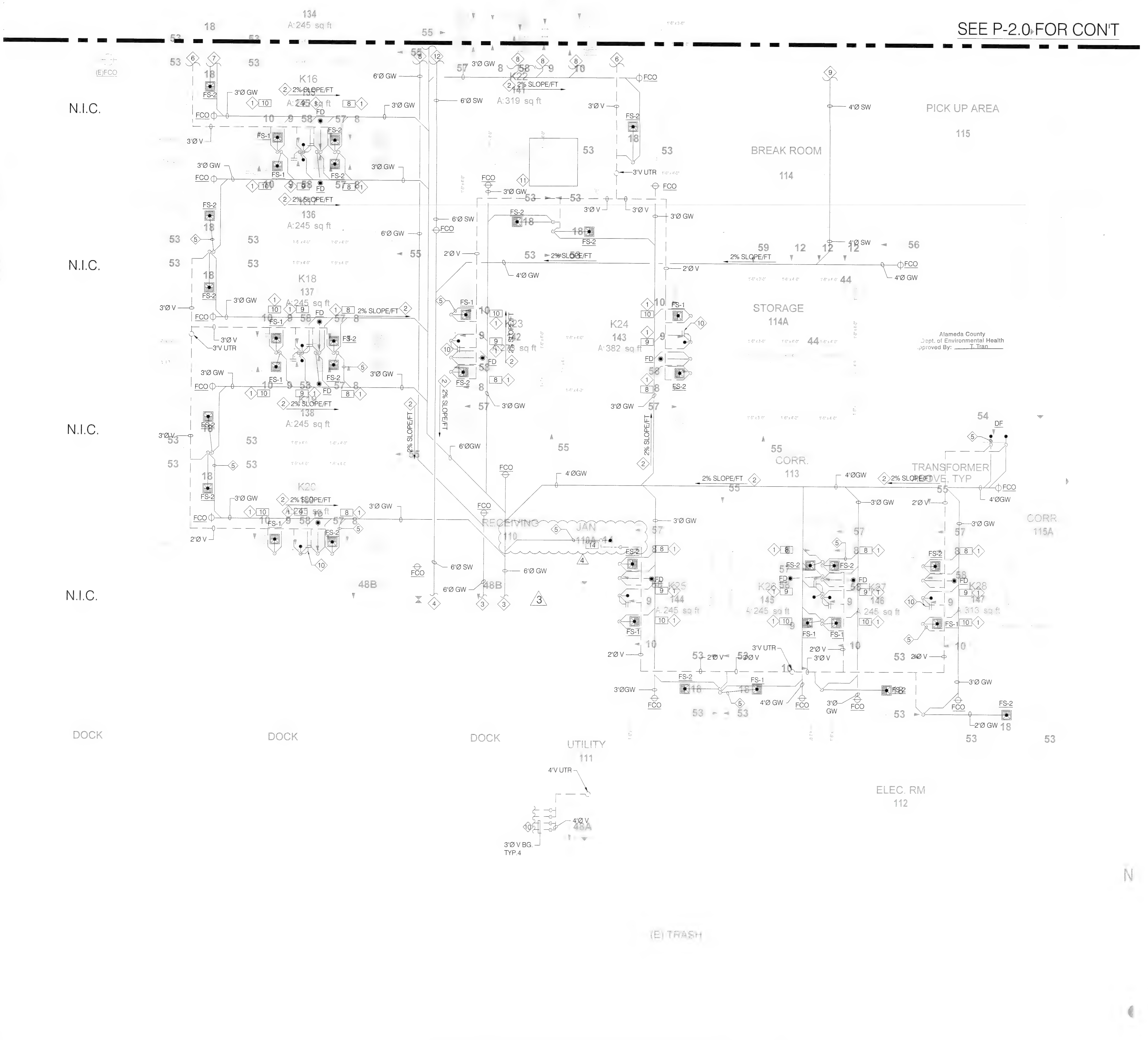

GROUND FLOOR WASTE AND VENT PIPING PLAN- AREA B

SCALE: 1/4" = 1'-0"

GENERAL NOTES

1. PLUMBING CONTRACTOR IS RESPONSIBLE TO COORDINATE WITH STRUCTURAL ENGINEER/GC TO LOCATE ALL STRUCTURAL MEMBERS PRIOR TO EXCAVATE TO AVOID DAMAGING ANY EXISTING STRUCTURAL MEMBERS.

SHEET NOTES:

1. DRAINAGE OF PLUMBING FIXTURE OR EQUIPMENT SHALL BE INDIRECTLY DISCHARGED TO NEARBY FLOOR SINK AND TERMINATED AT 1" ABOVE FLOOD RIM.
2. ALL HORIZONTAL SANITARY AND GREASE WASTE AND VENT PIPES SHALL BE INSTALLED TO MAINTAIN A MINIMUM ¼" PER-FOOT-DROP OR 2% SLOPED TOWARD DISCHARGE. TYPICAL OF ALL.
3. 6"Ø GW CONTINUES TO GREASE INTERCEPTOR. SEE DWG.1/ P-2.0 FOR CONTINUATION.
4. 6"Ø SW CONTINUES. SEE DWG.1/ P-2.0 FOR CONTINUATION.
5. PROVIDE DRAIN AND VENT PIPE PER SIZE SHOWN ON "PLUMBING FIXTURE BRANCH PIPE SIZE TABLE" SHOWN ON PB-0.3, U.N.O. TYPICAL OF ALL.
6. 3"Ø V CONTINUES IN CEILING SPACE. SEE DWG.1/ P-2.1 FOR CONTINUATION.
7. 2"Ø GW CONTINUES BELOW GRADE TO FLOOR SINK. SEE DWG.1/ P-2.1 FOR CONTINUATION.
8. 6"Ø GW CONTINUES BELOW GRADE. SEE DWG.1/ P-2.1 FOR CONTINUATION.
9. 4"Ø SW CONTINUES TO RESTROOM BELOW GRADE. SEE DWG.1/ P-2.1 FOR CONTINUATION.
10. PROVIDE WALL CLEAN-OUT ABOVE EACH FIXTURE CONNECTION FITTING. TYPICAL OF ALL.
11. (E)COLUMN CAP FOUNDATION LOCATION. CONTRACTOR TO VERIFY EXACT SIZE OF FOUNDATION AT FIELD PRIOR TO EXCAVATE - DO NOT DAMAGE COLUMN CAP AND CONFIRM WITH SEOR FOR EXACT CLEARANCE TO MAINTAIN. TYPICAL OF ALL. (1)
12. 6"Ø SW CONTINUES TO RESTROOM BELOW GRADE. SEE DWG.1/ P-2.1 FOR CONTINUATION.
13. 3"Ø V BELOW GRADE FROM GI BY CIVIL. SEE DWG.1/ P-2.0 FOR CONTINUATION. TYP. OF 4.

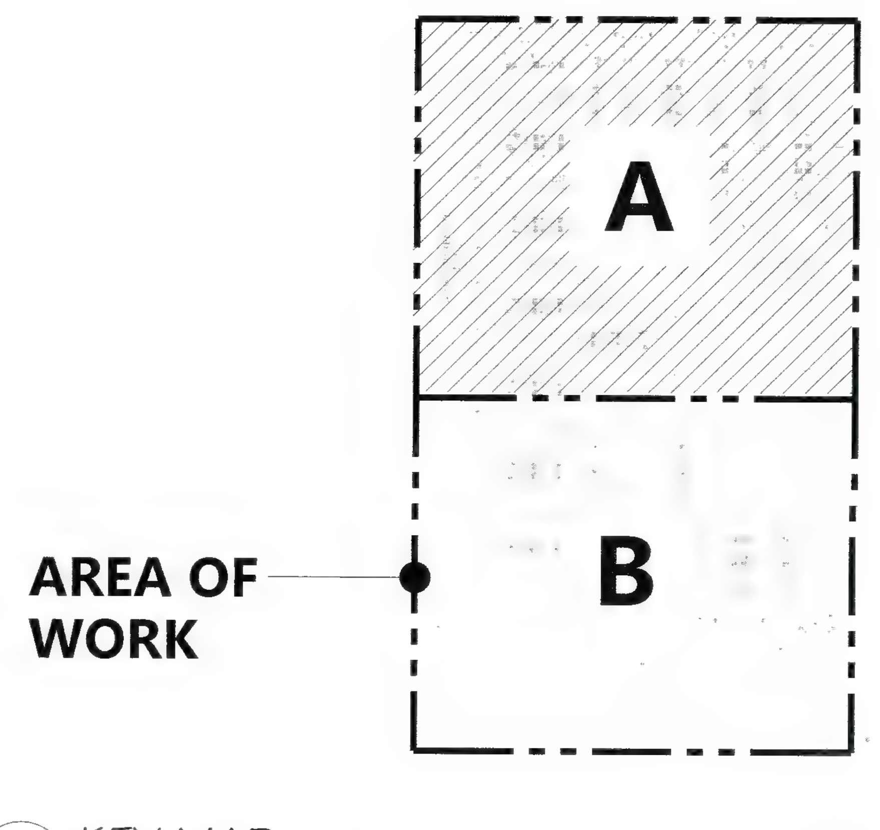

KEY MAP

SCALE: 1/8" = 1'-0"

CO-AR DESIGN, INC.
680 Brea Canyon Rd., Ste. 178
Diamond Bar, CA 91789

Office: 909-598-0186
http:\\www.coardesign.com

Dennis J. Lee, Architect
dennisl@coardesign.com

THESE DRAWINGS ARE THE PROPERTY OF THE ARCHITECT. THE DESIGNS SHOWN AND DESCRIBED HERIN INCLUDING ALL TECHNICAL DRAWINGS ARE PROPRIETARY AND CANNOT BE COPIED, DUPLICATED OR COMMERCIALLY EXPLOITED, IN WHOLE OR IN PART. THE DRAWINGS AND SPECIFICATIONS SHALL NOT BE USED BY THE OWNER ON OTHER PROJECTS, FOR ADDITIONS TO THIS PROJECT, OR FOR COMPLETION OF THIS PROJECT BY OTHERS. THE OWNER AGREES TO HOLD HARMLESS, INDEMNIFY AND DEFEND THE ARCHITECT AGAINST ALL DAMAGES, CLAIMS AND LOSSES, INCLUDING DEFENSE COSTS, ARISING OUT OF ANY REUSE OF THE PLANS AND SPECIFICATIONS WITHOUT THE WRITTEN AUTHORIZATION OF THE ARCHITECT OF RECORD.

COPYRIGHT © 2022 CO-AR DESIGN, INC., ALL RIGHTS RESERVED.

SEAL: REGISTERED PROFESSIONAL ENGINEER · JIA HUI PAN · M35374 · EXP. 6/30/23 · MECHANICAL · STATE OF CALIFORNIA

NOTES:

JHP Engineering and Design Services Inc.
3103 Independence Drive
Livermore, CA 94551
TEL: 925-409-2508
CEL: 510-468-0613
FAX: 510-788-6039

PROJECT:

SALTALK FREMONT KITCHEN TENANT IMPROVEMENT

42550 ALBRAE ST.,
FREMONT, CA 94538

CLIENT:

SALTALK, INC.
3334 VICTOR CT.,
SANTA CLARA, CA 95054

SUBMITTALS/ REVISIONS

1	HEALTH/USD SUBMITTAL		04/01/2022
2	2ND BLD. SUBMITTAL	1	07/22/2022
3	3RD BLD. SUBMITTAL		08/30/2022
4	3RD USD. SUBMITTAL	3	09/01/2022
5	2ND HEALTH SUBMITTAL	4	09/29/2022

PROJECT NO:	21127
SCALE:	AS SHOWN
DATE:	2/10/2022
DRAWN BY:	TL / YC
CHECKED BY:	JP

SHEET TITLE

GROUND FLOOR WASTE AND VENT PIPING PLAN - AREA B

SHEET NO

P-2.2

BIMcloud: COAR-CONFERENCE - BIMcloud Basic for ARCHICAD 25/202201-Fremont-Ghost Kitchen Thursday, February 10, 2022 1:47 PM

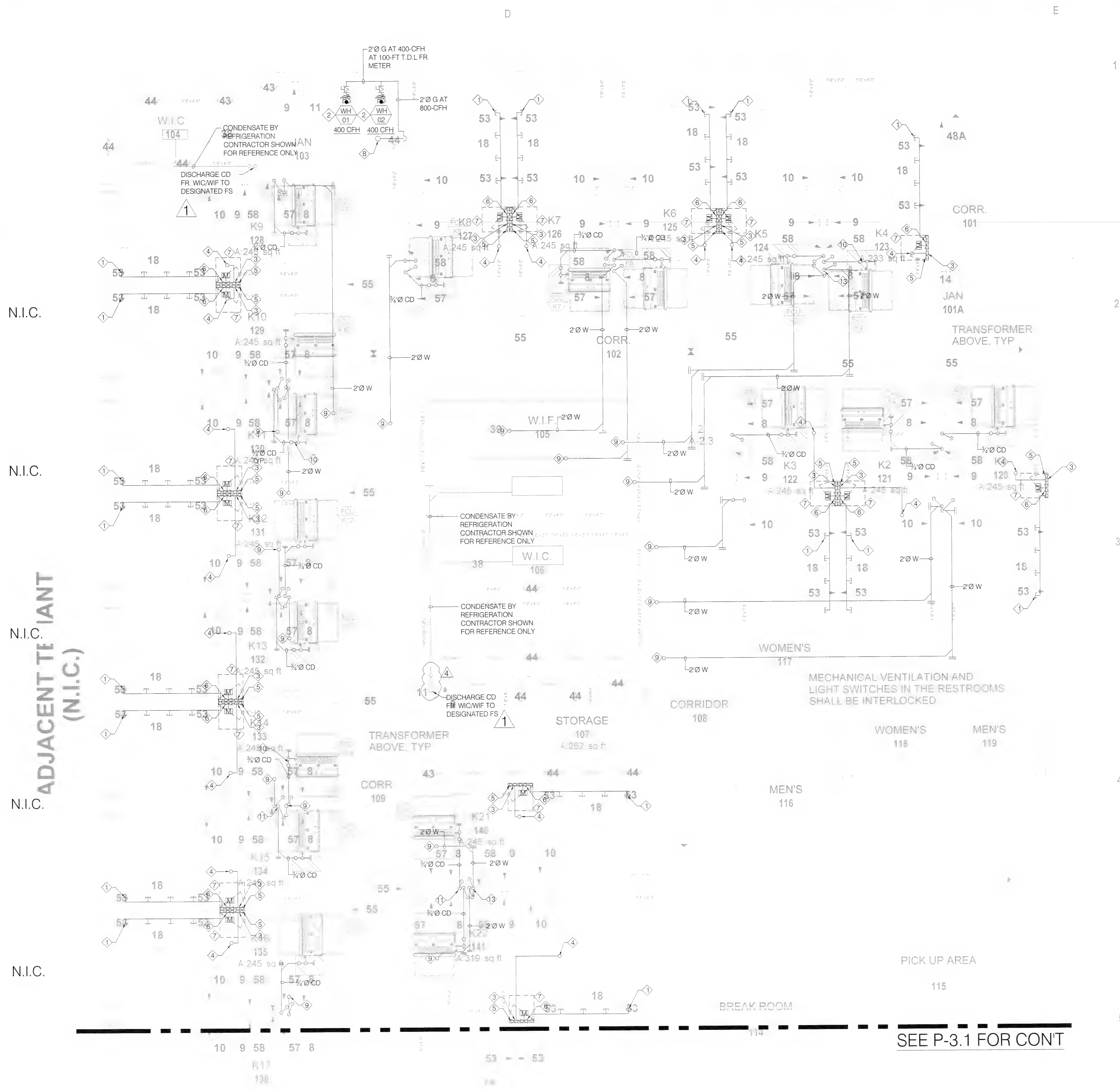

SEE P-3.1 FOR CONT

GROUND FLOOR NATURAL GAS AND CONDENSATE PIPING PLAN- AREA A

SCALE: 1/4" = 1'-0"

SHEET NOTES:

1. ¾"Ø G STUB OUT FOR FUTURE EQUIPMENT. TYP OF 4.
2. 1½"Ø LPG. FOR WATER HEATER GAS CONNECTION PROVIDE GAS COCK, DIRT-LEG AND FLEXIBLE AT EACH CONNECTION.
3. PROVIDE MINIMUM 6" HIGH DIRT-LEG WITH REMOVABLE CAP AT BOTTOM OF VERTICAL GAS RISERS. TYPICAL OF ALL.
4. 2"Ø LPG AT 750-CFH AT MAX. 100-FT T.D.L. DOWN FROM SUB-METER ON ROOF.
5. GAS SHUT-OFF CONTROL PANEL TO BE INTERLOCKED WITH KITCHEN EXHAUST CONTROL PANEL BY FIRE/ALARM/ANSUL CONTRACTOR. SEE KITCHEN HOOD DRAWING FOR CONTROL WIRING DETAILS.
6. UL LISTED LINESIZED NATURAL GAS ON/OFF SOLENOID VALVE TO AUTOMATICALLY SHUT-OFF GAS COOKING EQUIPMENT UPON DETECTION OF ACTIVATION OF KITCHEN HOOD ANSUL SYSTEM. CONTROL WIRE TO BE WIRED BY CERTIFIED CONTRACTOR INSTALLING ANSUL SYSTEM. TYPICAL.
7. PROVIDE MIN. 30X30 WALL BOX AT 48" A.F.F. FOR COOK LINE GAS MANUAL AND AUTOMATIC SHUT-OFF VALVES. MAINTAIN 30" CLEARANCE IN FRONT OF GAS SHUT-OFF VALVE AND WALL BOX ACCESS AT ALL TIME.
8. 2"Ø LPG AT 800-CFH AT MAX. 100-FT T.D.L. DOWN FROM SUB-METER ON ROOF.
9. 2"Ø WASTE DOWN FROM ROOF FROM MAKE UP AIR UNITS. SEE DWG.1/PB-4.0 FOR CONTINUATION.
10. PROVIDE ¾"Ø CD WITH VENT AND TRAP TO FAN COIL UNIT. TYPICAL. SEE DETAIL FOR FURTHER REQUIREMENT.
11. ¾"Ø CD DOWN AND INDIRECTLY DISCHARGE TO FLOOR SINK AT 1" ABOVE FLOOD RIM.
12. NOT USE
13. 2"Ø W DOWN AND INDIRECTLY DISCHARGE TO FLOOR SINK AT 1" ABOVE FLOOD RIM. TYP.

Alameda County
Dept. of Environmental Health
Approved By: T. Tran

AREA OF WORK

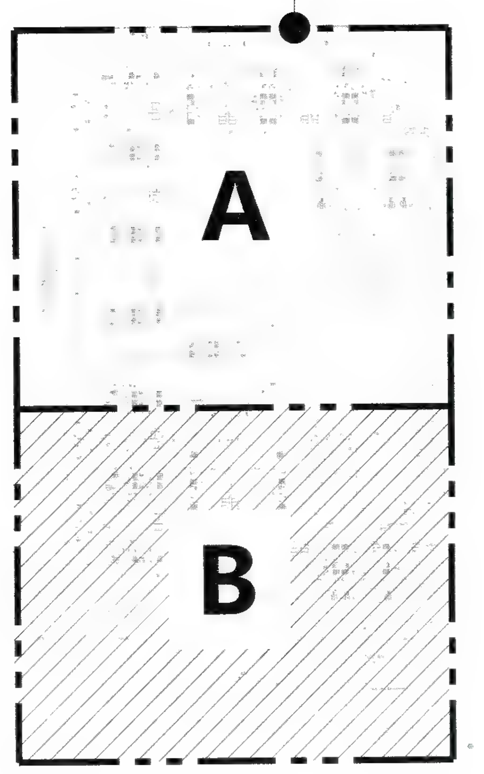

KEY MAP

SCALE: 1/8" = 1'-0"

CO-AR DESIGN, INC.
680 Brea Canyon Rd., Ste. 178
Diamond Bar, CA 91789

Office: 909-598-0186
http:\\www.coardesign.com

Dennis J. Lee, Architect
dennisl@coardesign.com

THESE DRAWINGS ARE THE PROPERTY OF THE ARCHITECT. THE DESIGNS SHOWN AND DESCRIBED HERIN INCLUDING ALL TECHNICAL DRAWINGS ARE PROPRIETARY AND CANNOT BE COPIED, DUPLICATED OR COMMERCIALLY EXPLOITED, IN WHOLE OR IN PART. THE DRAWINGS AND SPECIFICATIONS SHALL NOT BE USED BY THE OWNER ON OTHER PROJECTS, FOR ADDITIONS TO THIS PROJECT, OR FOR COMPLETION OF THIS PROJECT BY OTHERS. THE OWNER AGREES TO HOLD HARMLESS, INDEMNIFY AND DEFEND THE ARCHITECT AGAINST ALL DAMAGES, CLAIMS AND LOSSES, INCLUDING DEFENSE COSTS, ARISING OUT OF ANY REUSE OF THE PLANS AND SPECIFICATIONS WITHOUT THE WRITTEN AUTHORIZATION OF THE ARCHITECT OF RECORD.

COPYRIGHT © 2022 CO-AR DESIGN, INC., ALL RIGHTS RESERVED.

SEAL

REGISTERED PROFESSIONAL ENGINEER
JIA HUI PAN
M35374
EXP. 6/30/23
MECHANICAL
STATE OF CALIFORNIA

JHP Engineering and Design Services Inc.
3103 Independence Drive
Livermore, CA 94551
TEL: 925-409-2508
CEL: 510-468-0613
FAX: 510-788-6039

PROJECT
SALTALK FREMONT KITCHEN TENANT IMPROVEMENT

42550 ALBRAE ST.,
FREMONT, CA 94538

CLIENT

SALTALK, INC.
3334 VICTOR CT.,
SANTA CLARA, CA 95054

SUBMITTALS/ REVISIONS

1	HEALTH/USD SUBMITTAL		04/01/2022
2	2ND BLD. SUBMITTAL	1	07/22/2022
3	3RD BLD. SUBMITTAL		08/30/2022
4	3RD USD. SUBMITTAL		09/01/2022
5	2ND HEALTH SUBMITTAL	4	09/29/2022

PROJECT NO	21127
SCALE	AS SHOWN
DATE	2/10/2022
DRAWN BY:	TL / YC
CHECKED BY	JP

SHEET TITLE
NATURAL GAS AND CONDENSATE PIPING PLAN - AREA A

SHEET NO
P-3.0

BIMcloud: COAR-CONFERENCE - BIMcloud Basic for ARCHICAD 25/202201 Fremont-Ghost Kitchen Thursday, February 10, 2022 1:47 PM

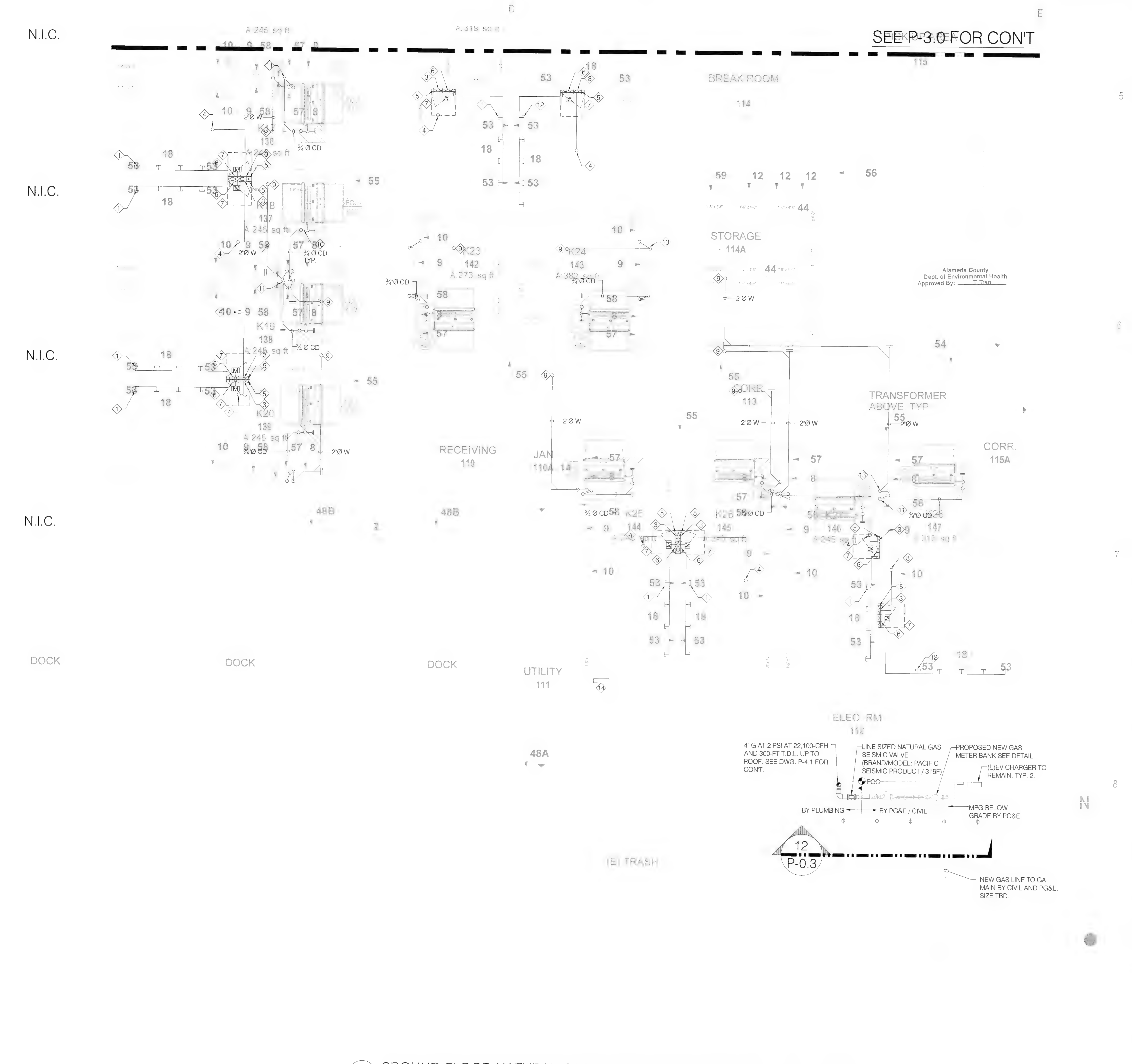

GROUND FLOOR NATURAL GAS AND CONDENSATE PIPING PLAN- AREA B

SCALE: 1/4" = 1'-0"

SHEET NOTES:

1. ¾"Ø G STUB OUT FOR FUTURE EQUIPMENT. TYP OF 4.
2. 1½"Ø LPG. FOR WATER HEATER GAS CONNECTION PROVIDE GAS COCK, DIRT-LEG AND FLEXIBLE AT EACH CONNECTION.
3. PROVIDE MINIMUM 6" HIGH DIRT-LEG WITH REMOVABLE CAP AT BOTTOM OF VERTICAL GAS RISERS. TYPICAL OF ALL.
4. 2"Ø LPG AT 750-CFH AT MAX. 100-FT T.D.L. DOWN FROM SUB-METER ON ROOF.
5. GAS SHUT-OFF CONTROL PANEL TO BE INTERLOCKED WITH KITCHEN EXHAUST CONTROL PANEL BY FIRE/ALARM/ANSUL CONTRACTOR. SEE KITCHEN HOOD DRAWING FOR CONTROL WIRING DETAILS.
6. UL LISTED LINESIZED NATURAL GAS ON/OFF SOLENOID VALVE TO AUTOMATICALLY SHUT-OFF GAS COOKING EQUIPMENT UPON DETECTION OF ACTIVATION OF KITCHEN HOOD ANSUL SYSTEM. CONTROL WIRE TO BE WIRED BY CERTIFIED CONTRACTOR INSTALLING ANSUL SYSTEM. TYPICAL.
7. PROVIDE MIN. 30X30 WALL BOX AT 48" A.F.F. FOR COOK LINE GAS MANUAL AND AUTOMATIC SHUT-OFF VALVES. MAINTAIN 30" CLEARANCE IN FRONT OF GAS SHUT-OFF VALVE AND WALL BOX ACCESS AT ALL TIME.
8. 2"Ø LPG AT 800-CFH AT MAX. 100-FT T.D.L. DOWN FROM SUB-METER ON ROOF.
9. 2"Ø WASTE DOWN FROM ROOF FROM MAKE UP AIR UNITS. SEE DWG.1/PB-4.0 FOR CONTINUATION.
10. PROVIDE ¾"Ø CD WITH VENT AND TRAP TO FAN COIL UNIT. TYPICAL. SEE DETAIL FOR FURTHER REQUIREMENT.
11. ¾"Ø CD DOWN AND INDIRECTLY DISCHARGE TO FLOOR SINK AT 1" ABOVE FLOOD RIM. TYP.
12. ¾"Ø G STUB OUT FOR FUTURE EQUIPMENT. TYP OF 5.
13. 2"Ø W DOWN AND INDIRECTLY DISCHARGE TO FLOOR SINK AT 1" ABOVE FLOOD RIM. TYP.
14. GAS SUB-METERING DATA PANEL. COORDINATE WITH ELECTRICAL FOR 120V CONVENIENT POWER OUTLET. SEE EQUIPMENT SCHEDULE FOR DETAILS.

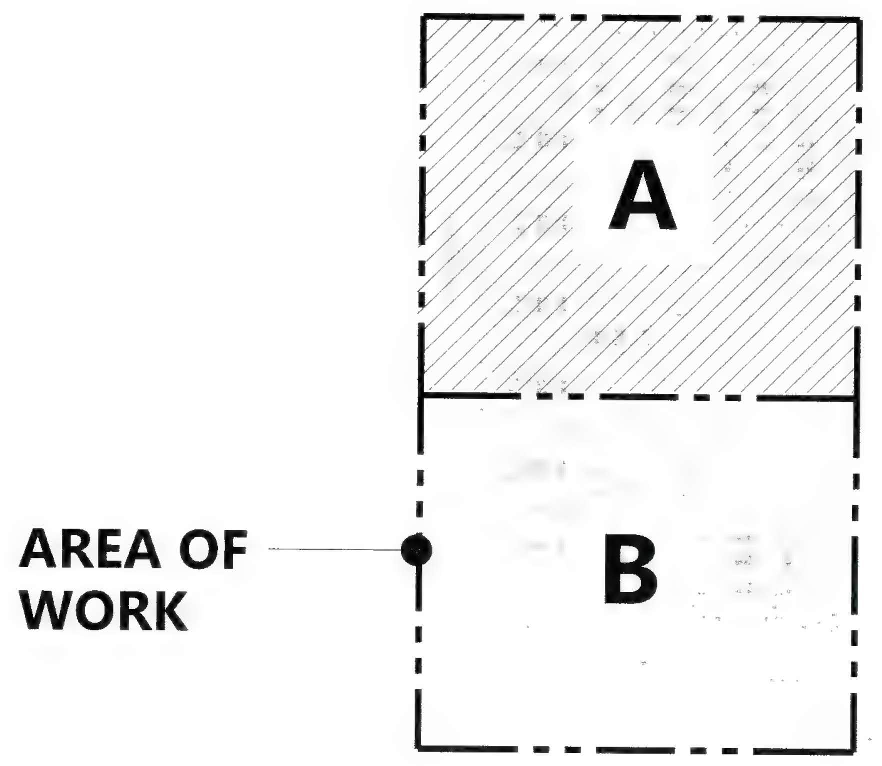

KEY MAP

SCALE: 1/8" = 1'-0"

CO-AR DESIGN, INC.
680 Brea Canyon Rd., Ste. 178
Diamond Bar, CA 91789

Office: 909-598-0186
http:\\www.coardesign.com

Dennis J. Lee, Architect
dennisl@coardesign.com

THESE DRAWINGS ARE THE PROPERTY OF THE ARCHITECT. THE DESIGNS SHOWN AND DESCRIBED HERIN INCLUDING ALL TECHNICAL DRAWINGS ARE PROPRIETARY AND CANNOT BE COPIED, DUPLICATED OR COMMERCIALLY EXPLOITED, IN WHOLE OR IN PART. THE DRAWINGS AND SPECIFICATIONS SHALL NOT BE USED BY THE OWNER ON OTHER PROJECTS, FOR ADDITIONS TO THIS PROJECT, OR FOR COMPLETION OF THIS PROJECT BY OTHERS. THE OWNER AGREES TO HOLD HARMLESS, INDEMNIFY AND DEFEND THE ARCHITECT AGAINST ALL DAMAGES, CLAIMS AND LOSSES, INCLUDING DEFENSE COSTS, ARISING OUT OF ANY REUSE OF THE PLANS AND SPECIFICATIONS WITHOUT THE WRITTEN AUTHORIZATION OF THE ARCHITECT OF RECORD.

COPYRIGHT © 2022 CO-AR DESIGN, INC., ALL RIGHTS RESERVED.

SEAL

REGISTERED PROFESSIONAL ENGINEER JIA HUI YAN M35374 EXP. 6/30/23 MECHANICAL STATE OF CALIFORNIA

NOTES

JHP Engineering and Design Services Inc.
3103 Independence Drive
Livermore, CA 94551
TEL: 925-409-2508
CEL: 510-468-0613
FAX: 510-788-6039

PROJECT

SALTALK FREMONT KITCHEN TENANT IMPROVEMENT

42550 ALBRAE ST.,
FREMONT, CA 94538

CLIENT

SALTALK, INC.
3334 VICTOR CT.,
SANTA CLARA, CA 95054

SUBMITTALS/ REVISIONS

1	HEALTH/USD SUBMITTAL	04/01/2022
2	2ND BLD. SUBMITTAL	07/22/2022
3	3RD BLD. SUBMITTAL	08/30/2022
4	3RD USD. SUBMITTAL	09/01/2022
5	2ND HEALTH SUBMITTAL	09/29/2022

PROJECT NO.	21127
SCALE.	AS SHOWN
DATE.	2/10/2022
DRAWN BY	TL / YC
CHECKED BY.	JP

SHEET TITLE

NATURAL GAS AND CONDENSATE PIPING PLAN- AREA B

SHEET NO

P-3.1

BIMcloud: COAR CONFERENCE - BIMcloud Basic for ARCHICAD 25/202201-Fremont-Ghost Kitchen Thursday, February 10, 2022 1:47 PM

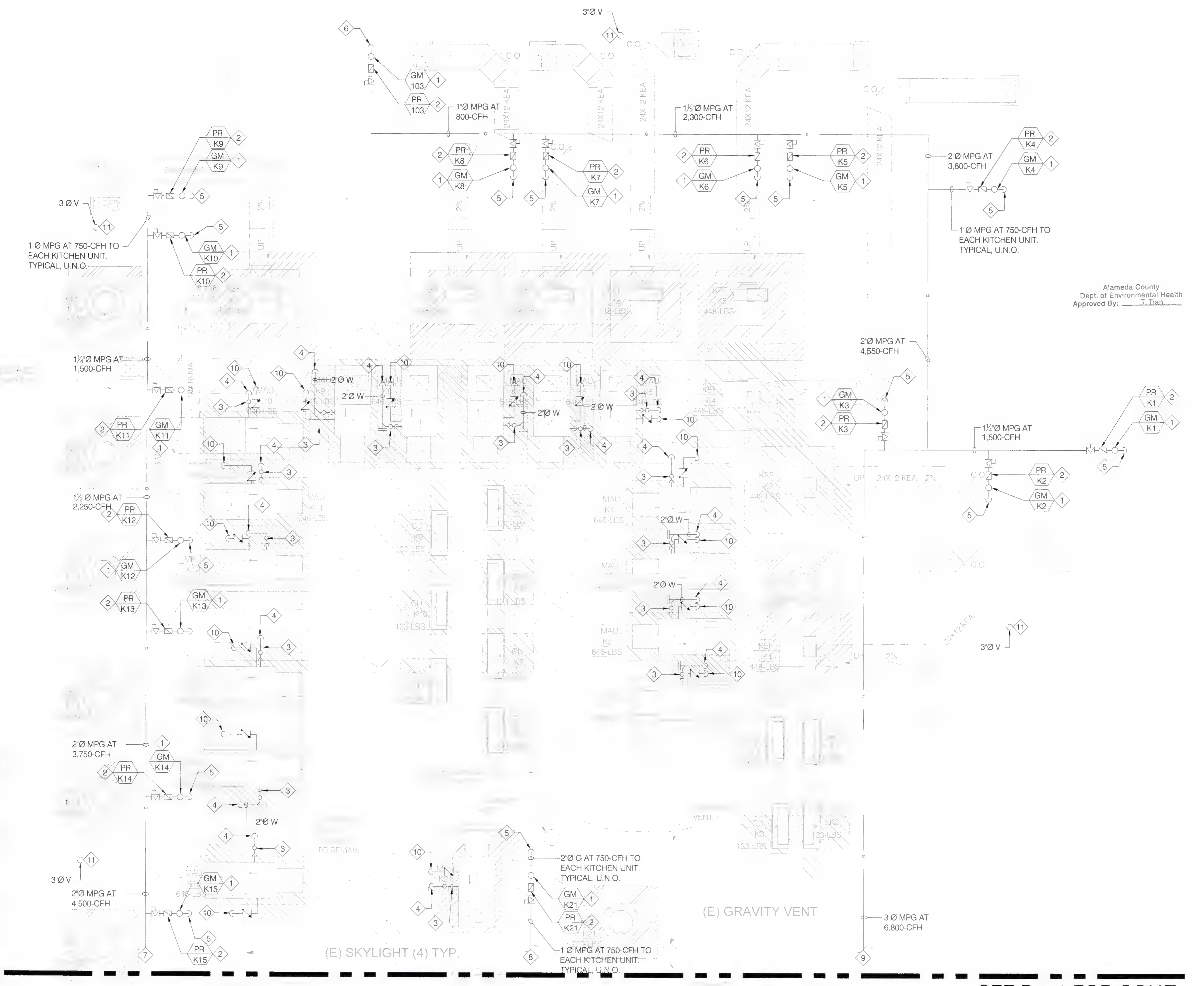

PLUMBING ROOF PIPING PLAN - AREA A

GENERAL DEMOLITION NOTES:

1. DEMOLISH AND REMOVE ALL PLUMBING SYSTEM, SERVING PROJECT AREAS PER PLAN, INCLUDING, BUT NOT LIMITED TO, FIXTURES, PIPES, SUPPORTS, CONTROLS, AND ALL OTHER ASSOCIATED COMPONENTS.
2. DEMOLITION SHALL NOT INTERRUPT THE UTILITY SERVICE OF OTHER TENANT SPACES IF APPLICABLE. IF TEMPORARY UTILITY SHUT-DOWN IS REQUIRED, ALWAYS COORDINATE WITH FACILITY FACULTY PRIOR TO SHUT-DOWN.
3. ALL DEMOLITION DONE IN PLACE SHALL NOT JEOPARDIZE THE STRUCTURAL INTEGRITY OF THE EXISTING BUILDING OR EXISTING UTILITY SUPPORTS THAT IS REQUIRED TO BE REMAINED.
4. PLUMBING CONTRACTOR IS RESPONSIBLE TO COORDINATE WITH GC TO REPAIR, REINFORCE, AND PATCH ANY WALL OR ROOF OPENING TO MAINTAIN EXISTING BUILDING FIRE RATING AND DESIGNED LIVE AND DEAD LOAD. ALSO PROVIDE NEW WATERPROOFING OR ROOFING TO SEAL OPENING WATERTIGHT.
5. COORDINATE WITH MECHANICAL AND GENERAL CONTRACTOR FOR DEMOLITION AND REMOVAL OF (E) NATURAL GAS, WATER HEATER, WATER PIPES, AND ASSOCIATED COMPONENTS SERVING AFFECTED MECHANICAL EQUIPMENT. SEE M-2.0 FOR DETAILS.

SHEET NOTES:

1. NATURAL GAS SUB-METER. SEE EQUIPMENT SCHEDULE FOR DETAILS.
2. NATURAL GAS PRESSURE REGULATOR TO REDUCE PRESSURE FROM 2 PSI TO 7"~11" W.C. SEE EQUIPMENT SCHEDULE FOR DETAILS.
3. PROVIDE 1½"Ø DRAIN WITH TRAP AND VENT TO MAU-01.
4. 2'Ø MECHANICAL WASTE DOWN, AND INDIRECTLY DRAIN TO MOP SINK. SEE DWG.1/ PB-3.0 FOR CONTINUATION.
5. 2'Ø LPG DOWN TO KITCHEN. SEE P-3.0 FOR CONTINUATION.
6. 2'Ø LPG DOWN TO WATER HEATERS. SEE P-3.0 FOR CONTINUATION.
7. 2'Ø G CONTINUES ON ROOF. SEE P-4.0 FOR CONTINUATION.
8. 1'Ø G CONTINUES ON ROOF. SEE P-4.0 FOR CONTINUATION.
9. 3'Ø G CONTINUES ON ROOF. SEE P-4.0 FOR CONTINUATION.
10. ½"Ø CW UP FROM BELOW. SEE DWG.1/ P-1.0 FOR CONTINUATION.
11. 3'Ø PLUMBING VENT TERMINATE AT ROOF AT 12" ABOVE ROOF, 36" AWAY FROM PARAPET, AND 10' AWAY FROM OSA INTAKE.

CO-AR DESIGN, INC.
680 Brea Canyon Rd., Ste. 178
Diamond Bar, CA 91789

Office: 909-598-0186
http:\\www.coardesign.com

Dennis J. Lee, Architect
dennisl@coardesign.com

THESE DRAWINGS ARE THE PROPERTY OF THE ARCHITECT. THE DESIGNS SHOWN AND DESCRIBED HERIN INCLUDING ALL TECHNICAL DRAWINGS ARE PROPRIETARY AND CANNOT BE COPIED, DUPLICATED OR COMMERCIALLY EXPLOITED, IN WHOLE OR IN PART. THE DRAWINGS AND SPECIFICATIONS SHALL NOT BE USED BY THE OWNER ON OTHER PROJECTS, FOR ADDITIONS TO THIS PROJECT, OR FOR COMPLETION OF THIS PROJECT BY OTHERS. THE OWNER AGREES TO HOLD HARMLESS, INDEMNIFY AND DEFEND THE ARCHITECT AGAINST ALL DAMAGES, CLAIMS AND LOSSES, INCLUDING DEFENSE COSTS, ARISING OUT OF ANY REUSE OF THE PLANS AND SPECIFICATIONS WITHOUT THE WRITTEN AUTHORIZATION OF THE ARCHITECT OF RECORD.

COPYRIGHT © 2022 CO-AR DESIGN, INC., ALL RIGHTS RESERVED.

SEAL

REGISTERED PROFESSIONAL ENGINEER JIA HUI AN M35374 EXP 6/30/23 MECHANICAL STATE OF CALIFORNIA

NOTES

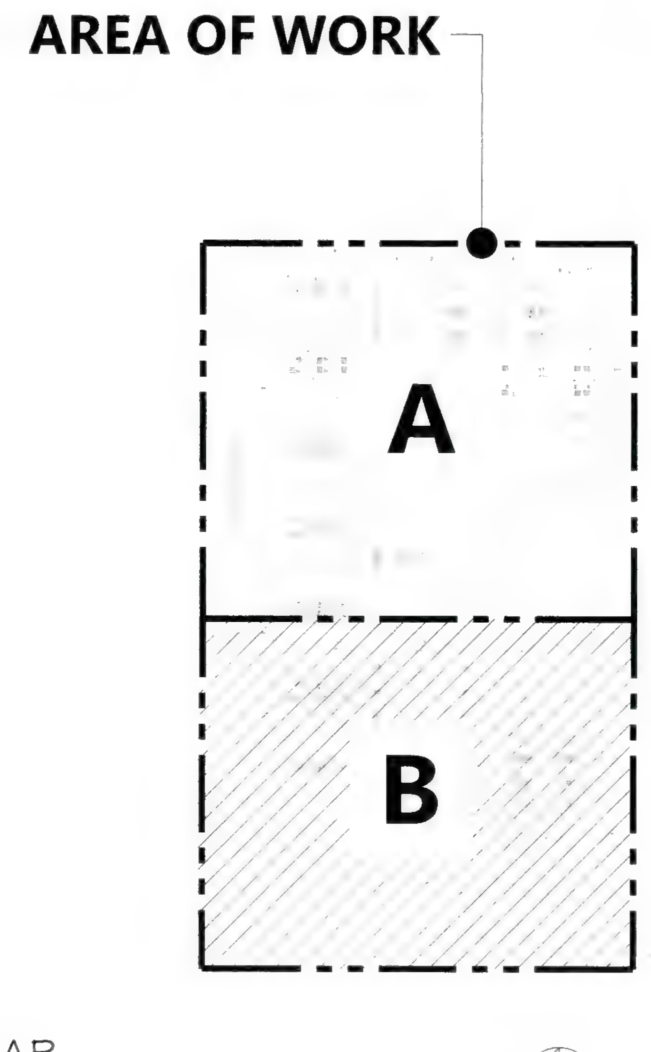

KEY MAP

JHP Engineering and Design Services Inc.
3103 Independence Drive
Livermore, CA 94551
TEL: 925-409-2508
CEL: 510-468-0613
FAX: 510-788-6039

PROJECT

SALTALK FREMONT KITCHEN TENANT IMPROVEMENT

42550 ALBRAE ST.,
FREMONT, CA 94538

CLIENT

SALTALK, INC.
3334 VICTOR CT.,
SANTA CLARA, CA 95054

SUBMITTALS/ REVISIONS

1	HEALTH/USD SUBMITTAL	04/01/2022
2	2ND BLD. SUBMITTAL	07/22/2022
3	3RD BLD. SUBMITTAL	08/30/2022
4	3RD USD. SUBMITTAL	09/01/2022
5	2ND HEALTH SUBMITTAL	09/29/2022

PROJECT NO	21127
SCALE	AS SHOWN
DATE	2/10/2022
DRAWN BY	TL / YC
CHECKED BY	JP

SHEET TITLE

PLUMBING ROOF PIPING PLAN - AREA A

SHEET NO

P-4.0

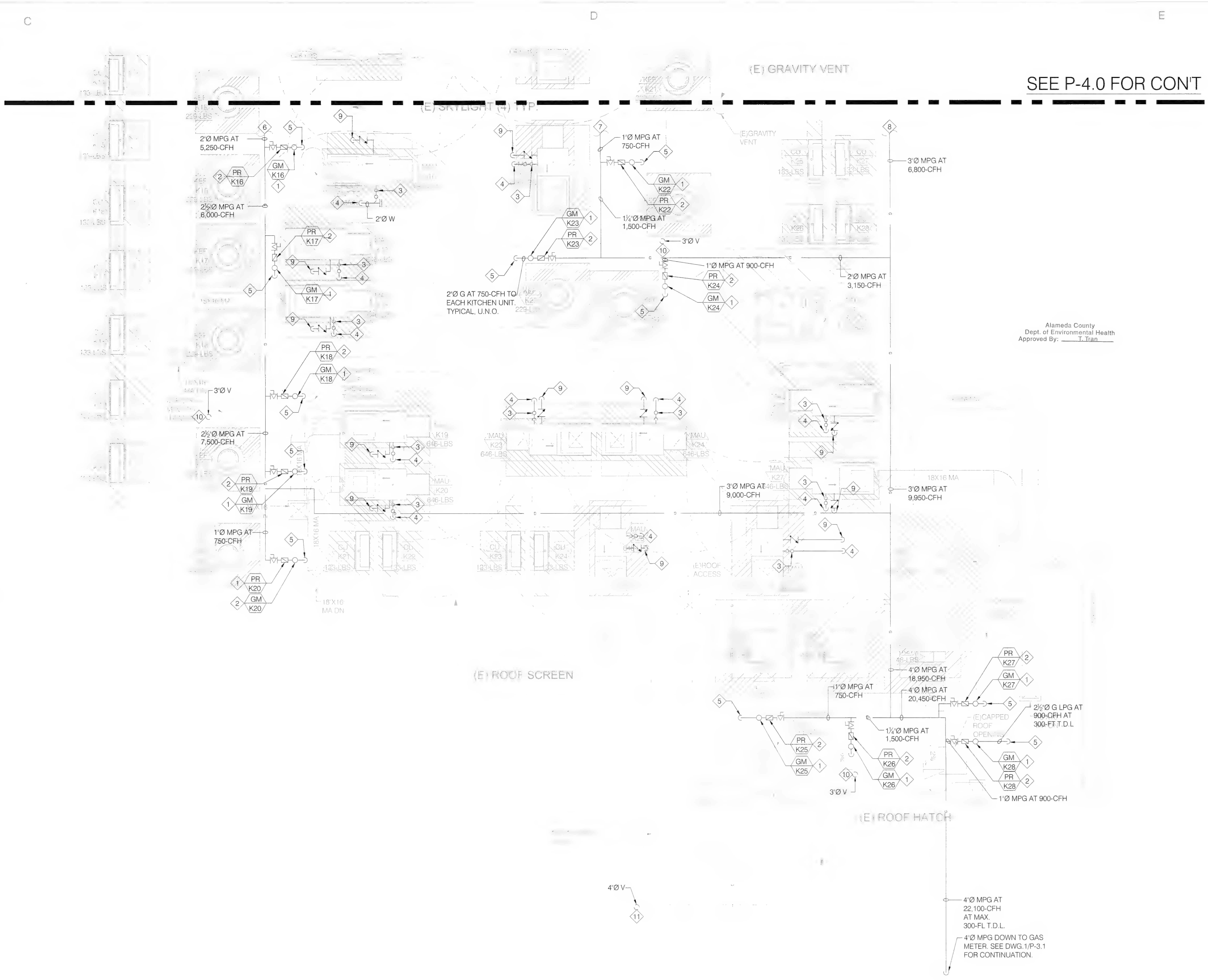

PLUMBING ROOF PIPING PLAN - AREA B

SCALE: 1/8" = 1'-0"

GENERAL DEMOLITION NOTES:

1. DEMOLISH AND REMOVE ALL PLUMBING SYSTEM, SERVING PROJECT AREAS PER PLAN, INCLUDING, BUT NOT LIMITED TO, FIXTURES, PIPES, SUPPORTS, CONTROLS, AND ALL OTHER ASSOCIATED COMPONENTS.
2. DEMOLITION SHALL NOT INTERRUPT THE UTILITY SERVICE OF OTHER TENANT SPACES IF APPLICABLE. IF TEMPORARY UTILITY SHUT-DOWN IS REQUIRED, ALWAYS COORDINATE WITH FACILITY FACULTY PRIOR TO SHUT-DOWN.
3. ALL DEMOLITION DONE IN PLACE SHALL NOT JEOPARDIZE THE STRUCTURAL INTEGRITY OF THE EXISTING BUILDING OR EXISTING UTILITY SUPPORTS THAT IS REQUIRED TO BE REMAINED.
4. PLUMBING CONTRACTOR IS RESPONSIBLE TO COORDINATE WITH GC TO REPAIR, REINFORCE, AND PATCH ANY WALL OR ROOF OPENING TO MAINTAIN EXISTING BUILDING FIRE RATING AND DESIGNED LIVE AND DEAD LOAD. ALSO PROVIDE NEW WATERPROOFING OR ROOFING TO SEAL OPENING WATERTIGHT.
5. COORDINATE WITH MECHANICAL AND GENERAL CONTRACTOR FOR DEMOLITION AND REMOVAL OF (E) NATURAL GAS, WATER HEATER, WATER PIPES. AND ASSOCIATED COMPONENTS SERVING AFFECTED MECHANICAL EQUIPMENT. SEE M-2.0 FOR DETAILS.

SHEET NOTES:

1. NATURAL GAS SUB-METER. SEE EQUIPMENT SCHEDULE FOR DETAILS.
2. NATURAL GAS PRESSURE REGULATOR TO REDUCE PRESSURE FROM 2 PSI TO 7"~11" W.C. SEE EQUIPMENT SCHEDULE FOR DETAILS.
3. PROVIDE 1½"Ø DRAIN WITH TRAP AND VENT TO MAU-01.
4. 2"Ø MECHANICAL WASTE DOWN. AND INDIRECTLY DRAIN TO MOP SINK. SEE DWG.1/ PB-3.1 FOR CONTINUATION.
5. 2"Ø G DOWN TO KITCHEN. SEE P-3.1 FOR CONTINUATION.
6. 2"Ø G CONTINUES ON ROOF. SEE P-4.0 FOR CONTINUATION.
7. 1"Ø G CONTINUES ON ROOF. SEE P-4.0 FOR CONTINUATION.
8. 3"Ø G CONTINUES ON ROOF. SEE P-4.0 FOR CONTINUATION.
9. ½"Ø CW UP FROM BELOW. SEE DWG.1/ P-1.1 FOR CONTINUATION.
10. 3"Ø PLUMBING VENT TERMINATE AT ROOF AT 12" ABOVE ROOF, 36" AWAY FROM PARAPET, AND 10' AWAY FROM OSA INTAKE.
11. 4"Ø PLUMBING VENT TERMINATE AT ROOF AT 12" ABOVE ROOF, 36" AWAY FROM PARAPET, AND 10' AWAY FROM OSA INTAKE.

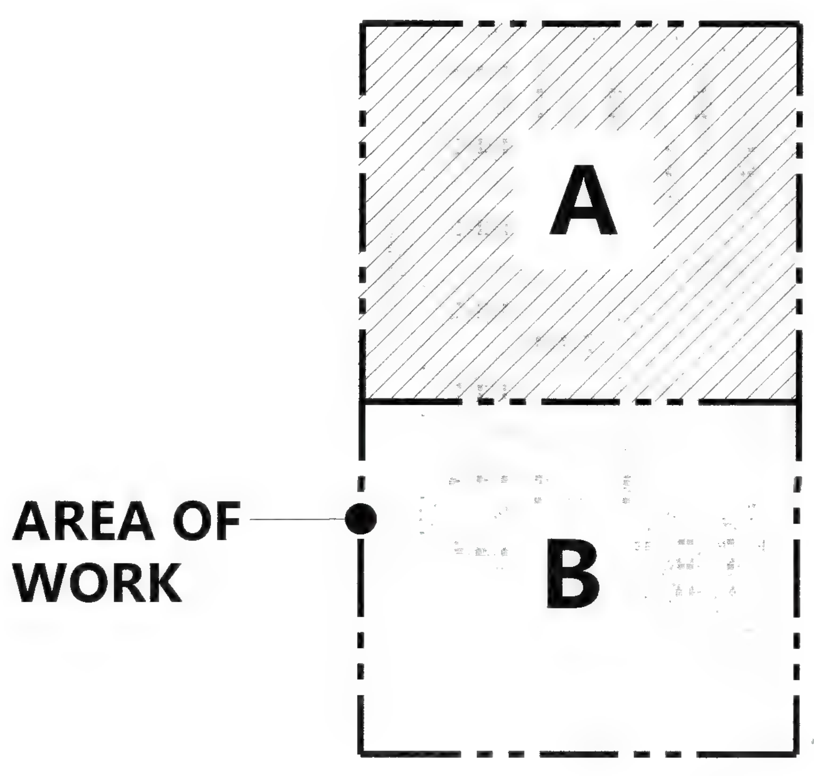

KEY MAP

CO-AR DESIGN, INC.
680 Brea Canyon Rd., Ste. 178
Diamond Bar, CA 91789

Office: 909-598-0186
http:\\www.coardesign.com

Dennis J. Lee, Architect
dennisl@coardesign.com

THESE DRAWINGS ARE THE PROPERTY OF THE ARCHITECT. THE DESIGNS SHOWN AND DESCRIBED HERIN INCLUDING ALL TECHNICAL DRAWINGS ARE PROPRIETARY AND CANNOT BE COPIED, DUPLICATED OR COMMERCIALLY EXPLOITED, IN WHOLE OR IN PART. THE DRAWINGS AND SPECIFICATIONS SHALL NOT BE USED BY THE OWNER ON OTHER PROJECTS, FOR ADDITIONS TO THIS PROJECT, OR FOR COMPLETION OF THIS PROJECT BY OTHERS. THE OWNER AGREES TO HOLD HARMLESS, INDEMNIFY AND DEFEND THE ARCHITECT AGAINST ALL DAMAGES, CLAIMS AND LOSSES, INCLUDING DEFENSE COSTS, ARISING OUT OF ANY REUSE OF THE PLANS AND SPECIFICATIONS WITHOUT THE WRITTEN AUTHORIZATION OF THE ARCHITECT OF RECORD

COPYRIGHT © 2022 CO-AR DESIGN, INC., ALL RIGHTS RESERVED.

SEAL

REGISTERED PROFESSIONAL ENGINEER
JIA HUI PAN
M35374
EXP 6/30/23
MECHANICAL
STATE OF CALIFORNIA

NOTES

JHP Engineering and Design Services Inc.
3103 Independence Drive
Livermore, CA 94551
TEL: 925-409-2508
CEL: 510-468-0613
FAX: 510-788-6039

PROJECT

SALTALK FREMONT KITCHEN TENANT IMPROVEMENT

42550 ALBRAE ST.,
FREMONT, CA 94538

CLIENT

SALTALK, INC.
3334 VICTOR CT.,
SANTA CLARA, CA 95054

SUBMITTALS/ REVISIONS

1	HEALTH/USD SUBMITTAL	04/01/2022
2	2ND BLD. SUBMITTAL	07/22/2022
3	3RD BLD. SUBMITTAL	08/30/2022
4	3RD USD. SUBMITTAL	09/01/2022
5	2ND HEALTH SUBMITTAL	09/29/2022

PROJECT NO	21127
SCALE	AS SHOWN
DATE	2/10/2022
DRAWN BY	TL / YC
CHECKED BY	JP

SHEET TITLE

PLUMBING ROOF PIPING PLAN - AREA B

SHEET NO

P-4.1

EQUIPMENT. SEE TYPICAL KITCHEN UNIT FOR CONTINUATION OF PIPING DIAGRAM AT ONE UNIT. TYPICAL.

4 MOST REMOTE EQUIPMENT. AT 300-FT T.D.L TO MAIN GAS METER

SOUP POT	[illegible]			
WOK RANGE	¾"Ø	26	330	8,580
TYP. KITCHEN TOTAL (CFH)			750	19,500

GAS DEMAND CALCULATION - KITCHEN TYPE B (TYP. OF 2)

EQUIPMENT	EQUIPMENT CONNECTION SIZE	QTY	GAS INPUT (CFH)	TOTAL (CFH)
4-BURNER RANGE	¾"Ø	2	200	400
FRYER	¾"Ø	2	140	280
SOUP POT	¾"Ø	2	80	160
WOK RANGE	¾"Ø	2	330	660
OVEN	¾"Ø	2	150	300
TYP. KITCHEN TOTAL (CFH)			900	1800

GAS DEMAND CALCULATION - COMMON AREA

EQUIPMENT	EQUIPMENT CONNECTION SIZE	QTY	GAS INPUT (CFH)	TOTAL (CFH)
WH-01	1½"Ø	1	400	400
WH-02	1½"Ø	1	400	400
TOTAL (CFH)				800
OVERALL TOTAL (CFH)				22,100

GAS SUPPLY SYSTEM:
(PER 2019 CPC TABLE 1215.2(1)) AND 1215.2(4)

TOTAL GAS LOAD OF (E) 2"Ø AT 2-PSI PROVIDED BY LANDLORD AT POC: 22,100-CFH AT 300 FT TDL FROM METER TO MOST REMOTE EQUIPMENT.
MIN. GAS PIPE SIZE PER 2019 CPC TABLE 1215.2 (4): 4"Ø AT 2-PSI
NEW TENANT GAS LINE SIZE FROM POC: (1) 4"Ø AT 2-PSI

NOTES:
CONNECTION SIZE SHOWN IN THIS TABLE IS NOT NECESSARY THE BRANCH PIPE SIZE TO EQUIPMENT. SEE NATURAL GAS PIPING PLAN ON PB-1.2 FOR PIPE SIZE.

Alameda County
Dept. of Environmental Health
Approved By: T. Tran

GAS PIPING ISOMETRIC DIAGRAM
SCALE: NTS

TABLE 1215.2(1) [illegible]

TABLE 1215.2(4) [illegible]

Diamond Bar, CA 91789

Office: 909-598-0186
http:\\www.coardesign.com

Dennis J. Lee, Architect
dennisl@coardesign.com

THESE DRAWINGS ARE THE PROPERTY OF THE ARCHITECT. THE DESIGNS SHOWN AND DESCRIBED HERIN INCLUDING ALL TECHNICAL DRAWINGS ARE PROPRIETARY AND CANNOT BE COPIED, DUPLICATED OR COMMERCIALLY EXPLOITED, IN WHOLE OR IN PART. THE DRAWINGS AND SPECIFICATIONS SHALL NOT BE USED BY THE OWNER ON OTHER PROJECTS, FOR ADDITIONS TO THIS PROJECT, OR FOR COMPLETION OF THIS PROJECT BY OTHERS. THE OWNER AGREES TO HOLD HARMLESS, INDEMNIFY AND DEFEND THE ARCHITECT AGAINST ALL DAMAGES, CLAIMS AND LOSSES, INCLUDING DEFENSE COSTS, ARISING OUT OF ANY REUSE OF THE PLANS AND SPECIFICATIONS WITHOUT THE WRITTEN AUTHORIZATION OF THE ARCHITECT OF RECORD.

COPYRIGHT © 2022 CO-AR DESIGN, INC., ALL RIGHTS RESERVED.

SEAL: REGISTERED PROFESSIONAL ENGINEER JIA HUI PAN M35374 EXP. 6/30/23 MECHANICAL STATE OF CALIFORNIA

NOTES:

JHP Engineering and Design Services Inc.
3103 Independence Drive
Livermore, CA 94551
TEL: 925-409-2508
CEL: 510-468-0613
FAX: 510-788-6039

PROJECT:
SALTALK FREMONT KITCHEN TENANT IMPROVEMENT

42550 ALBRAE ST.,
FREMONT, CA 94538

CLIENT:
SALTALK, INC.
3334 VICTOR CT.,
SANTA CLARA, CA 95054

SUBMITTALS/ REVISIONS:

1	HEALTH/USD SUBMITTAL	04/01/2022
2	2ND BLD. SUBMITTAL (1)	07/22/2022
3	3RD BLD. SUBMITTAL	08/30/2022
4	3RD USD. SUBMITTAL	09/01/2022
5	2ND HEALTH SUBMITTAL	09/29/2022

PROJECT NO	21127
SCALE:	AS SHOWN
DATE:	2/10/2022
DRAWN BY:	TL / YC
CHECKED BY	JP

SHEET TITLE
GAS PIPING ISOMETRIC DIAGRAM

SHEET NO:
P-5.0

Bluebeam: COAR-CONFERENCE... BIMcloud Basic for ARCHICAD 25/202201 Fremont Ghost Kitchen Thursday, February 10, 2022 1:47 PM

GENERAL NOTES

1. CONTRACTOR SHALL VISIT JOB SITE TO VERIFY FIELD CONDITION AGAINST CONSTRUCTION PLAN AND SPECIFICATION, IDENTIFY POSSIBLE CONFLICT AND DISCREPANCY BETWEEN PLAN AND SITE CONDITION, AND BRING TO OWNER'S AND ENGINEER'S ATTENTION PRIOR TO ENTER CONTRACT.
2. SUBMISSION OF A CONTRACT SHALL BE CONSTRUCTED AS EVIDENCE THAT A CAREFUL EXAMINATION OF THE PORTION OF THE EXISTING BUILDING, EQUIPMENT, SYSTEMS, SITE CONSTRAINTS, ETC, WHICH MAY AFFECT THE ASSOCIATED WORK SCOPE UNDER THIS CONTRACT, AND THE ACCESS TO SUCH SPACES, HAVE ALL BEEN MADE AND THAT THE CONTRACTOR IS FULLY AWARE OF WITH EXISTING CONDITIONS AND DIFFICULTIES THAT WILL AFFECT THE EXECUTION OF WORK. LATER CLAIMS SHALL NOT BE MADE FOR LABOR, EQUIPMENT, OR MATERIAL REQUIRED BECAUSE OF DIFFICULTIES ENCOUNTERED WHICH COULD HAVE BEEN FORESEEN DURING SUCH EXAMINATIONS.
3. BY ENTERING CONTACT OF CONSTRUCTION, WHETHER IT IS SHOWN OR NOT SHOWN ON THIS PLAN, CONTRACTOR IS FULLY RESPONSIBLE TO COMPLETE WORK WITH MEETING ALL APPLICABLE CODES, LAWS, AND REGULATIONS GOVERNING ANY PORTION OF THE WORK SCOPE ON PLAN AND SPECIFICATIONS. PRIOR TO SUBMITTING A PROPOSAL, CONTRACTOR SHALL FULLY UNDERSTAND AND COVER ALL COSTS WORK SCOPE AND MATERIALS TO MEET ALL APPLICABLE CODES, LAWS, AND REGULATIONS. ANY WORK DONE BY THE CONTRACTOR CAUSING SUCH VIOLATION SHALL BE CORRECTED BY THE CONTRACTOR.
4. CONTRACTOR IS TO REVIEW PLANS OF OTHER DISCIPLINES AND COORDINATE WITH THE WORK OF OTHER TRADES PRIOR TO INSTALLATION TO AVOID ANY CONFLICT. NO COST SHALL BE INCURRED ON CONSTRUCTABILITY ISSUE DUE TO LACK OF COORDINATION.
5. ALL WORK SHOWN ON PLAN ARE DIAGRAMMATIC AND INDICATE GENERAL ARRANGEMENT OF SYSTEM AND WORK. INFORMATION ON PLAN SHALL NOT BE USED TO DETERMINE EXACT LOCATION OF INSTALLATION. WHERE INSTALLATION REQUIRES EXACT MEASUREMENTS AND COORDINATION WITH WORKS OF OTHER TRADE, CONTRACTOR SHALL PREFORM ALL REQUIRED WORK AND PROVIDE SHOP DRAWINGS FOR REVIEW AND APPROVAL PRIOR TO INSTALLATION. THE CONTACTOR SHALL ALLOW IN HIS PRICE FOR WORK DONE WITH DEVIATIONS IN LOCATION AND METHOD TO AVOID OBSTRUCTIONS AND CONFLICT OF OTHER TRADES AND EXISTING UTILIZES OF BASE BUILDING.
6. CONTRACTOR SHALL SUBMIT SPECIFICATIONS OF ALL THE MATERIALS AND EQUIPMENT TO BE USED ALONG WITH SHOP DRAWING WHERE REQUIRES IN SPECIFICATION FOR APPROVAL PRIOR TO ORDER.
7. ALL NEW WORK CONNECTING TO EXISTING BASE BUILDING UTILITIES SHALL BE FULLY COORDINATED WITH REPRESENTATIVE OF OWNERSHIP TO RESULT MINIMUM INTERFERENCE TO EXISTING FACILITIES. TEMPORARY UTILITY SHUT-DOWN TO EXISTING BUILDING SERVICE SHALL BE APPROVED BY OWNERSHIP WITH WRITTEN CONSENT OF BUILDING OWNER AND SHALL INCURRED NO ADDITIONAL CHARGES. FOLLOW ALL REQUIRED CLEANING PROCEDURES AND CONNECTION REQUIREMENT PRIOR TO ESTABLISH SERVICE AFTER CONNECTION. WHERE CONTINUOUS OPERATION OF EXISTING BUILDING SERVICES ARE REQUIRED, PROVIDE WORKMANSHIP AND MATERIAL FOR ISOLATION BETWEEN BUILDING AND PROJECT SPACE, RESTORE BUILDING SERVICE IMMEDIATELY WITH MAINTAINING CONDITION.
8. CONTRACTOR SHALL STORE ALL EQUIPMENT AND MATERIAL IN A ORGANIZED AND CLEANED SPACE AT ALL TIME TO PREVENT FROM DAMAGING AND DETERIORATION PRIOR TO INSTALLATION. CONTRACTOR SHALL KEEP ALL PART OF THE CONSTRUCTION AREA AND ASSOCIATED ACCESSES CLEAN AND FREE OF DEBRIS RESULTING FROM EXECUTION OF WORK.
9. ALL LOCATION OF EXISTING UTILITIES ARE SHOWN BASED ON RECORD DRAWING OR INFORMATION PROVIDED BY SURVEYOR OR BASE BUILDING. CONTRACTOR IS RESPONSIBLE TO VERIFY EXACT LOCATION, SIZE, CONDITION, MATERIAL, AND INVERT AS APPLICABLE TO CONFIRM CONSTRUCTIBILITY PRIOR TO INSTALL.
10. ALL EQUIPMENT INSTALLED SHALL BE PROVIDED WITH ACCESS AND CLEARANCES MEETING CODE REQUIREMENT AND REQUIREMENTS OF FACTORY INSTALLATION GUIDELINES FOR MAINTENANCE. WHERE ACCESS SHALL BE PROVIDED FOR OPERATION, INSPECTION, TESTING, BALANCING, MAINTENANCE, OR CODE COMPLIANCE, WHETHER SHOWN ON NOT SHOWN ON ARCHITECTURAL PLAN, CONTRACTOR SHALL COORDINATE WITH GENERAL CONTRACTOR FOR PROVISION OF SUCH ACCESS.
11. ANY INVASIVE CONSTRUCTION, SUCH AS CORE-DRILLING, CUTTING, BORING, OPENING, TO EXISTING BUILDING FLOOR OR WALL, STRUCTURAL OR NON-STRUCTURAL RELATED, SHALL BE SUBJECTED TO WRITTEN APPROVAL BY REPRESENTATIVE OR OWNERSHIP OF BASE BUILDING. WHERE REQUIRED BY OWNER, PROVIDE SHOP DRAWING WITH DETAILED MEANS AND METHODS WITH DIMENSIONAL RESULTS OF X-RAY SCANNING AS EVIDENCE TO ENSURE NO DAMAGE WILL CAUSE TO EXISTING BUILDING STRUCTURE OR UTILITY PRIOR TO PERFORM SUCH WORK. NO CONSTRUCTION SHALL BE DONE IN RESULTING OF ANY DAMAGING OR DERATING OF BUILDING STRUCTURE INTEGRITY AND UTILITY SERVICEABILITY.
12. ANY OPENING MADE TO EXISTING BUILDING SHALL BE SUPPORTED, PATCHED, AND SEALED TO MEET ALL SPECIFICATION OF ORIGINAL CONSTRUCTION. ALL PENETRATION TO RATED ASSEMBLY SHALL BE PROTECTED BY UL LISTED FIRM AND/OR SMOKE PROTECTION ASSEMBLY TO MAINTAIN ORIGINAL ASSEMBLY FIRE AND SMOKE RATING.
13. CONTRACTOR SHALL PROVIDE INSURANCE POLICY IN ACCORDANCE TO BUILDING OWNER'S AND PROJECT OWNER'S REQUIREMENTS INCLUDING A HOLD HARMLESS CAUSE FOR OWNER AND ENGINEER ON RECORD.
14. FOR THE USE OF EQUIPMENT OR MATERIAL THAT ARE DIFFERENT FROM SCHEDULES OR SPECIFICATIONS, CONTRACTOR IS RESPONSIBLE TO PROVIDE, INCLUDING BUT NOT LIMITED TO, SPECIFICATION, CALCULATION, ENGINEERING, COST DIFFERENCE, ETC. FOR APPROVAL OF EQUAL AND OWNER'S APPROVAL.
15. ALL WORK DONE SHALL BE GUARANTEED FOR A PERIOD OF TWO YEARS FROM DATE OF ACCEPTANCE OF WORK.
16. PRIOR TO FINAL ACCEPTANCE BY OWNER OR REPRESENTATIVE OF OWNER, CONTRACTOR IS RESPONSIBLE TO TEST, ADJUST, AND BALANCE ALL ASSOCIATED EQUIPMENT AND SYSTEM WITHIN SCOPE WITH PROVISIONS OF REPORTS WHERE REQUIRED IN SPECIFICATIONS TO DEMONSTRATE THAT ALL REQUIREMENTS OF PLANS AND SPECIFICATIONS ARE FULLY MET AND ALL APPLICABLE CODES, LAWS, AND REGULATIONS ARE FULLY COMPLIED.

ELECTRICAL GENERAL NOTES

1. THE WORK INCLUDES THE FURNISHING OF ALL LABOR AND MATERIALS FOR THE COMPLETE INSTALLATION OF ALL ELECTRICAL SYSTEMS AND EQUIPMENT REFERRED TO, IMPLIED OR SHOWN ON THE DRAWINGS EXCEPT SUCH MATERIALS AND EQUIPMENT AS MAY BE SPECIFIED OR INDICATED TO BE PROVIDED BY OTHERS.
2. THE ELECTRICAL CONTRACTOR SHALL VISIT JOB SITE AND VERIFY FIELD CONDITIONS BEFORE BIDDING AND SHALL INCLUDE IN HIS BID THE NECESSARY COSTS TO CONSTRUCT THIS PROJECT IN ACCORDANCE WITH THE INTENT OF THE ELECTRICAL DRAWINGS AND ALL APPLICABLE CODES. ELECTRICAL CONTRACTOR SHALL ALLOW FOR DEMOLITION WORK NECESSARY FOR A COMPLETE INSTALLATION OF THE NEW ELECTRICAL EQUIPMENT.
3. THE ELECTRICAL CONTRACTOR SHALL PERFORM HIS WORK IN ACCORDANCE WITH ALL ELECTRICAL CODES, BUILDING CODES AND FIRE CODES, ALL OF WHICH ARE HEREBY MADE A PART OF THE PLANS.
4. LOCATION OF ALL EQUIPMENT AND OUTLETS AS SHOWN ON THE DRAWINGS ARE APPROXIMATELY ONLY, EXCEPT WHERE DIRECTED BY DIMENSIONS. HEIGHT OR DETAILS. CONFIRM LOCATIONS BY REFERENCE TO ARCHITECTURAL, AND EQUIPMENT DETAILS AND VERIFY WITH ARCHITECT.
5. THE ELECTRICAL CONTRACTOR SHALL INFORM HIMSELF PRIOR TO SUBMISSION OF BIDS AS TO THE ELECTRICAL WORK REQUIRED BY OTHER SECTIONS OF THE PLANS, SUCH AS THE ARCHITECTURAL, MECHANICAL, ETC. AND INCLUDE THOSE ITEMS INDICATED TO BE PROVIDED BY THE ELECTRICAL CONTRACTOR OR "BY OTHERS".
6. THE ARCHITECTURAL DRAWINGS TAKE PRECEDENCE OVER THE ELECTRICAL DRAWINGS IN THE REPRESENTATION OF THE GENERAL CONSTRUCTION WORK AND THE DRAWINGS OF THE VARIOUS TRADES TAKE PRECEDENCE IN THE REPRESENTATION OF THE WORK OF THOSE TRADES. THE CONTRACTOR SHALL REFER TO ALL DRAWINGS TO COORDINATE THE ELECTRICAL WORK WITH THE WORK DONE ON OTHER TRADES.
7. THE ARCHITECT RESERVES THE RIGHT TO MOVE ANY OUTLETS WITHIN THE RADIUS OF SIX FEET WITHOUT ADDITIONAL EXPENSES TO THE OWNER. NO ALLOWANCE WILL BE MADE FOR EXTRAS FOR ANY CHANGES IN LOCATIONS EXCEPT WHERE EQUIPMENT HAS BEEN SET AND CONNECTED BEFORE ANY CHANGE IS ORDERED AND THEN ONLY WHEN SUCH CHANGE IS IN WRITING.
8. THE SIZE AND LOCATION OF EQUIPMENT IS SHOWN TO SCALE WHENEVER POSSIBLE, BUT THE CONTRACTOR SHALL MAKE USE OF ALL DATA IN ALL THE CONTRACT DOCUMENTS AND SHALL VERIFY THIS INFORMATION.
9. IT SHALL BE THE RESPONSIBILITY OF THE CONTRACTOR TO INSTALL THE CONDUITS WITH MINIMUM NUMBER OF BENDS IN SUCH A MANNER AS TO CONFORM TO THE STRUCTURES, AVOID OBSTRUCTIONS, MAINTAIN HEAD ROOM, OPEN DOORWAYS AND PASSAGEWAYS CLEAR, BE COMPATIBLE WITH LATEST CONSTRUCTION METHOD, AND MEET ALL STRUCTURAL CODE REQUIREMENTS. FURNISH AND INSTALL PULL BOX AS NECESSARY FOR LONG CONDUIT RUNS.
10. ALL ELECTRICAL OUTLETS, MOTORS, DEVICES, APPARATUS, EQUIPMENT FIXTURES AND APPLIANCES WHEREVER INSTALLED, "BY OTHERS", SHALL BE FULLY CONNECTED TO THE PROPER ELECTRICAL SOURCES AND CONTROLS AND LEFT IN OPERATIONAL CONDITION.
11. WHERE CONNECTIONS ARE SPECIFIED TO BE MADE TO EQUIPMENT FURNISHED BY OTHER DIVISIONS, OBTAIN THE REQUIRED ROUGH-IN DIMENSIONS AND CONNECTION DIAGRAMS FROM THE RESPECTIVE DIVISIONS FOR EACH ITEM AND ASSUME FULL RESPONSIBILITY FOR NEAT AND WORKMANLIKE INSTALLATION OF CONDUIT AND WIRE CONNECTION.
12. CONTRACTOR TO BE RESPONSIBLE FOR ALL ELECTRICAL GROUNDING AND BRACING REQUIREMENTS FOR EQUIPMENT.
13. THE COMPLETE INSTALLATION, INCLUDING THE NEUTRAL CONDUCTOR, METALLIC CONDUIT AND RACEWAYS, BOXES, CABINETS AND EQUIPMENT, SHALL BE PERMANENTLY AND EFFECTIVELY GROUNDED IN ACCORDANCE WITH ALL CODE REQUIREMENTS, WHETHER OR NOT SUCH CONNECTIONS ARE SPECIFICALLY SHOWN AND/OR SPECIFIED.
14. EACH OUTLET SHALL BE TESTED AND BE PLACED IN WORKING ORDER BEFORE THE INSTALLATION SHALL BE CONSIDERED COMPLETE. ALL PARTS OF THE ELECTRICAL SYSTEM SHALL BE GUARANTEED TO PERFORM THE REQUIRED FUNCTION IN ACCORDANCE WITH THE PERFORMANCE REQUIREMENTS WHICH ARE INDICATED OR WHERE SUCH PARTICULAR REQUIREMENTS ARE NOT STATED, THEY SHALL PERFORM IN ACCORDANCE WITH THE PREVAILING RECOGNIZED TRADE STANDARDS OF PERFORMANCE. DURING THE PERIOD OF ONE YEAR REPAIRS OR REPLACEMENTS NECESSARY TO ACCOMPLISH THE REQUIRED PERFORMANCE.
15. IN THE EVENT OF FAILURE OF ANY WORK, EQUIPMENT OR SERVICE DURING THE LIFE OF THE GUARANTEE, CONTRACTOR SHALL REPAIR OR REPLACE THE DEFECTIVE WORK AND SHALL REMOVE, REPLACE OR RESTORE, AT NO COST TO OWNER, ANY PART OF THE STRUCTURE OR BUILDING WHICH MAY BE DAMAGED AS THE DIRECT RESULT OF HIS DEFECTIVE WORK OR MATERIAL.
16. ALL ELECTRICAL EQUIPMENT, FUSES AND CIRCUIT BREAKERS SHALL HAVE AN INTERRUPTING RATING NOT LESS THAN THE MAXIMUM SHORT CIRCUIT TO WHICH THEY MAY BE SUBJECTED.
17. ELECTRICAL CONTRACTOR SHALL SEE THAT ALL CONDUIT, METALLIC RACEWAYS DO NOT MAKE CONTACT WITH PLUMBING LINES AND MECHANICAL DUCTS.
18. THE CONTRACTOR SHALL BE LICENSED TO PERFORM THE WORK OUTLINED, TO BE FAMILIAR WITH ALL LOCAL CODES HAVING JURISDICTION AND TO HAVE REVIEWED THE DRAWINGS AND SPECIFICATIONS AND VERIFIED THAT ALL SYSTEMS CONTAINED THEREIN ARE IN COMPLIANCE WITH THOSE CODES HAVING JURISDICTION BY THE ACT OF SUBMITTING A BID. THE CONTRACTOR SHALL BE DEEMED TO HAVE ACCEPTED SUCH CONDITIONS AND RESPONSIBILITY AND TO HAVE MADE ALLOWANCES THEREFORE IN PREPARING HIS FIGURES SO THAT THERE WILL BE NO ADDITIONAL COSTS REQUESTED FOR ANY ADDITIONAL REQUIREMENTS MADE BY THOSE AGENCIES HAVING JURISDICTION.
19. ALL ELECTRICAL MATERIALS AND EQUIPMENT SHALL BE NEW UNLESS OTHERWISE NOTED ON DRAWINGS, AND LISTED BY UNDERWRITERS LABORATORIES.
20. SECONDARY WIRES AND CABLES SHALL BE SINGLE CONDUCTOR, RATED 600 VOLTS, TYPE THHN/THWN INSULATION, COLOR CODES PER INSPECTION AUTHORITY. ALL CONDUCTORS SHALL BE COPPER, NUMBER 12 AWG MINIMUM.
21. ALL WIRES AND CABLES SHALL BE INSTALLED IN ELECTRICAL METALLIC CONDUIT OR SURFACE METAL RACEWAY, UNLESS OTHERWISE NOTED.
22. MOUNTING, SUPPORTING, AND ANCHORING OF ALL ELECTRICAL EQUIPMENT SHALL BE IN STRICT COMPLIANCE WITH SEISMIC RESTRAINT REQUIREMENTS OF THE OFFICE OF THE STATE ARCHITECT.
23. ALL BRANCH CIRCUITS SHOWN ON DRAWING ARE NEW. PANELBOARD CIRCUIT DIRECTORY SHALL BE LABELED (TYPEWRITTEN) AS PER PANEL SCHEDULE.
24. PENETRATION OF FIRE RATED WALLS, CEILING, OR FLOOR SHALL COMPLY WITH U.B.C. REQUIREMENTS. PENETRATIONS ARE TO BE SEALED PROMPTLY USING APPROVED SEALANT TO INSURE THE INTEGRITY OF THE EXISTING FIRE RATING. FOAM TYPE AEROSOL SEALANT SHALL NOT BE USED.
25. ALL JUNCTION BOXES, PULL BOXES, CONDUITS ENTERING OR LEAVING AN AREA OR ROOM OR PASSING THROUGH A WALL OR FLOOR FOR BRANCH CIRCUITS SHALL BE CLEARLY MARKED WITH PERMANENT BLACK INK PEN IDENTIFYING THE BRANCH CIRCUIT CONTAINED.
26. CONTRACTOR SHALL BEAR FULL RESPONSIBILITY FOR MODIFICATION TO EXISTING WIRING IN PANELBOARD TO SUIT NEW CIRCUITRY.
27. CORING OR CUTTING IN WALLS OR SLABS REQUIRES PRIOR WRITTEN AUTHORIZATION AND SCHEDULING THROUGH THE ARCHITECT AND BUILDING OWNER AND MUST BE PERFORMED AFTER NORMAL BUILDING HOURS.
28. ALL METALLIC RACEWAYS, INCLUDING THE EXISTING, SHALL BE SECURELY FASTENED IN PLACE WITH APPROVED HANGERS NOT MORE THAN 10 FEET APART AND WITHIN 3 FEET OF EACH OUTLET BOX, JUNCTION BOX, DEVICE BOX, CABINET, CONDUIT BODY, OR OTHER RACEWAY TERMINATIONS.
29. SUBMITTALS: CATALOG CUTS SHALL BE SUBMITTED FOR ALL MATERIALS AND EQUIPMENT. SUBMIT MINIMUM 3 COPIES FOR REVIEW AND APPROVAL PRIOR TO INSTALLATION.
30. ELECTRICAL CONTRACTOR SHALL FURNISH AS-BUILT DRAWINGS TO THE GENERAL CONTRACTOR ON COMPLETION OF THE JOB.

LEGENDS, SYMBOLS AND ABBREVIATIONS

SYMBOL	DESCRIPTION
	NEW GROUNDED FOUR-PLEX ELECTRICAL OUTLET. S.A.D. FOR HEIGHT AND EXACT LOCATION
	NEW GROUNDED DUPLEX ELECTRICAL OUTLET. S.A.D. FOR HEIGHT AND EXACT LOCATION
GFI	NEW DUPLEX GROUND FAULT INTERRUPTER ELECTRICAL OUTLET S.A.D. FOR HEIGHT AND EXACT LOCATION
DED	DEDICATED RECEPTACLE OUTLET.
	NEW CEILING MOUNTED RECEPTACLE.
	NEW FLOOR MOUNTED RECEPTACLE.
	NEW FLOOR MOUNTED VOICE / DATA JACK
	NEW VOICE / DATA JACK
$	NEW WALL MOUNTED LIGHT SWITCH, 125V, 20A, SPECIFICATION GRADE,
$3	NEW WALL MOUNTED 3-WAY LIGHT SWITCH, 125V, 20A, SPECIFICATION GRADE,
	NEW WALL MOUNTED DIMMER, 125V, 20A, SPECIFICATION GRADE, U.O.N.
	ELECTICAL PANELBOARD, SEE PANEL SCHEDULES
M	MOTOR OUTLET AND FLEX CONNECTION
	DISCONNECT SWITCH
	MECHANICAL EQUIPMENT IDENTIFICATION TAG
X	SHEET NOTES IDENTIFICATION TAG
J / J	JUNCTION BOX
	CEILING MOUNTED OCCUPANCY SENSOR
DL	DAYLIGHT SENSOR
PL	PLUG LOAD MODULE
RC	LIGHTING ROOM CONTROLLER
NB	LIGHTING NETWORK CONNECTION
AV	NEW AV CONNECTION

ABBR.	DESCRIPTION	ABBR.	DESCRIPTION
ACT	ABOVE COUNTER TOP	IG	ISOLATED GROUND
AFF	ABOVE FINISHED FLOOR	IMC	INTERMEDIATE METALLIC TUBING
AIC	AMPERE INTERRUPTING CAPACITY	KVA	KILOVOLT-AMPERES
ATS	AUTOMATIC TRANSFER SWITCH	LRA	LOCKED ROTOR AMPS
AWG	AMERICAN WIRE GAUGE	LTG	LIGHTING
BCT	BELOW COUNTER TOP	MCA	MINIMUM CIRCUIT AMPACITY
C	CONDUIT	MCB	MAIN CIRCUIT BREAKER
C.B	CIRCUIT BREAKER	MLO	MAIN LUG ONLY
CIR/CKT	CIRCUIT	MOCP	MAXIMUM OVER CURRENT PROTECTION
C1D1	CLASS I DIVISION I HAZARDOUS LOCATION	MSB	MAIN SWITCH BOARD
C1D2	CLASS I DIVISION II HAZARDOUS LOCATION	NC	NORMALLY CLOSED
C.O.	CONDUIT ONLY	N.I.C.	NOT IN CONTRACT
CT	CURRENT TRANSFORMER	NO	NORMALLY OPEN OR NUMBER
CU	COPPER	PNL	PANEL
DIA	DIAMETER	PWR	POWER
DWG	DRAWING	(R)	RELOCATED
(E)	EXISTING TO REMAIN DESIGNATION	RMC	RIGID METAL CONDUIT
ELEC	ELECTRICAL	S.A.D.	SEE ARCHITECTURAL DRAWINGS
ELR	END OF LINE REGISTER	TEL	TELEPHONE
EM	EMERGENCY	TX	TRANSFORMER
EMT	ELECTRICAL METALLIC TUBING	TYP	TYPICAL
EXP	EXPLOSION PROOF	UG	UNDER GROUND
FLA	FULL LOAD AMPERES	U.O.N.	UNLESS OTHERWISE NOTED
FMC	FLEXIBLE METAL CONDUIT	V	VOLTS
GFI/GFCI	GROUND-FAULT CIRCUIT-INTERRUPTER PROTECTED	VFD	VARIABLE FREQUENCY DRIVE
		W	WATT OR WIRE
GND	GROUND	WP	WEATHERPROOF
HZ	HERTZ	XFMR	TRANSFORMER

APPLICABLE CODES

2019 CALIFORNIA BUILDING CODE
2019 CALIFORNIA ELECTRICAL CODE AND NATIONAL ELECTRICAL CODE
2019 CALIFORNIA ENERGY CODE
2019 CALIFORNIA FIRE CODE
2019 NFPA 13

ALL AMENDMENTS AND SUPPLEMENTS TO ABOVE CODES
ALL CITY OF FREMONT AND ALAMEDA COUNTY ORDINANCES AND AMENDMENTS TO ABOVE CODES

DRAWING INDEX

E-0.1 ELECTRICAL NOTES AND INFORMATION
E-0.2 ENERGY COMPLIANCE FORMS
E-0.3 LIGHTING SCHEDULE AND CONTROL DIAGRAM
E-0.4 SINGLE-LINE DIAGRAM AND PANEL SCHEDULES
E-0.5 ELECTRICAL INSTALLATION DETAILS
E-1.0 POWER PLAN - GROUND FLOOR
E-1.1 POWER PLAN - ROOF
E-2.0 LIGHTING PLAN - GROUDN FLOOR

Alameda County
Dept. of Environmental Health
Approved By: T. Tran

VOLTAGE DROP LIMITATIONS

SUMMARY OF MAXIMUM FEEDER AND BRANCH CIRCUIT LENGTHS

WIRE (AWG)	CIRCUIT AMPS(A)	MAXIMUM FEEDER LENGTH(ft)					MAXIMUM BRANCH CIRCUIT LENGTH(ft)				
		120V	208V	240V	277V	480V	120V	208V	240V	277V	480V
14	12	39	67	78	90	156	58	101	117	135	233
12	16	46	80	93	107	185	69	120	139	160	278
10	24	48	83	96	111	192	72	125	144	166	288
8	32	57	99	115	132	229	86	149	172	199	344
6	40	73	127	146	169	293	110	190	220	253	439
4	52	89	154	178	206	356	134	232	267	309	535
2	72	103	178	206	237	412	154	267	309	356	617
0	96	123	212	245	283	490	184	319	368	424	735
00	108	137	238	274	317	549	206	357	412	475	823
0000	144	163	283	327	377	654	245	425	490	566	980
250	164	170	294	340	392	679	255	441	509	588	1019
300	184	181	314	362	418	725	272	471	543	627	1087
350	200	195	338	390	450	779	292	506	584	675	1169
500	248	224	388	448	517	896	336	582	572	776	1344

SUMMARY OF VOLT DROP LIMITS

CIRCUIT VOLTS(V)	2% VOLTAGE DROP(V)	3% VOLTAGE DROP(V)	5% VOLTAGE DROP(V)
120	2.4	3.6	6.0
208	4.2	6.2	10.4
240	4.8	7.2	12.0
277	5.5	8.3	13.9
480	9.6	14.4	24.0

NOTES:
1. TABLE ABOVE IS FOR COPPER WIRING ONLY.
2. IF FIELD CONDITIONS RESULT IN WIRE SIZES NOTED ABOVE EXCEEDING THE LENGTHS NOTED ABOVE, CONTRACTOR SHALL INCREASE WIRE AND CONDUIT SIZE AS REQUIRED TO MEET VOLTAGE DROP REQUIREMENTS.
3. FEEDERS SHALL BE LIMITED TO A MAXIMUM OF 2% VOLTAGE DROP.
4. BRANCH CIRCUITS SHALL BE LIMITED TO A MAXIMUM OF 3% VOLTAGE DROP.
5. TOTAL VOLTAGE DROP FOR ELECTRICAL DISTRIBUTION SYSTEM(FEEDER+BRANCH CIRCUIT)SHALL BE LIMITED TO A MAXIMUM OF 5% VOLTAGE DROP.

WIRE SIZE & AMP RATINGS

WIRE GAUGE SIZE	COPPER			ALUMINUM	
	60°C(140°F) NM-B,UF-B	75°C(167°F) THW,THWN, SE,USE,XHHW	90°C(194°F) THWN-2,THHN, SE,USE,USE-2	75°C(167°F) THW,THWN, SE,USE,XHHW	90°C(194°F) XHHW-2,THHN, THWN-2
14	15	20	25	--	--
12	20	25	30	20	25
10	30	35	40	30	35
8	40	50	55	40	45
6	55	65	75	50	55
4	70	85	95	65	75
3	85	100	115	75	85
2	95	115	130	90	100
1	110	130	145	100	115
1/0	125	150	170	120	135
2/0	145	175	195	135	150
3/0	165	200	225	155	175
4/0	195	230	260	180	205
250	215	255	290	205	230
300	240	285	320	230	260
350	260	310	350	250	280
500	320	380	430	310	350
600	350	420	475	340	385
750	400	475	535	385	435
1000	455	545	615	445	500

GROUNDING ELECTRODE CONDUCTORS

SIZE OF LARGEST UNGROUNDED SERVICE-ENTRANCE CONDUCTOR OR EQUIVALENT AREA FOR PARALLEL CONDUCTORS(AWG/KCMIL)		SIZE OF GROUNDING ELECTRODE CONDUCTOR (AWG/KCMIL)	
COPPER	ALUMUNUM OR COPPER-CLAD ALUMINUM	COPPER	ALUMUNUM OR COPPER-CLAD ALUMINUM
#2 OR SMALLER	1/0 OR SMALLER	#8	#6
1 OR 1/0	2/0 OR 3/0	#6	#4
2/0 OR 3/0	4/0 OR 250	#4	#2
OVER 3/0 THROUGH 350	OVER 250 THROUGH 500	#2	1/0
OVER 350 THROUGH 600	OVER 500 THROUGH 900	1/0	3/0
OVER 600 THROUGH 1100	OVER 900 THROUGH 1750	2/0	4/0
OVER 1100	OVER 1750	3/0	250

NOTES:
1. F MULTIPLE SETS OF SERVICE-ENTRANCE CONDUCTORS CONNECT DIRECTLY TO THE SERVICE DROP, SET OF OVERHEAD SERVICE CONDUCTORS, SET OF UNDERGROUND SERVICE CONDUCTORS, OR SERVICE LATERAL, THE EQUIVALENT SIZE OF THE LARGEST SERVICE -ENTRANCE CONDUCTOR SHALL BE DETERMINED BY THE LARGEST SUM OF THE AREAS OF THE CORRESPONDING CONDUCTORS OF EACH SET.
2. WHERE THERE ARE NO SERVICE-ENTRANCE CONDUCTORS, THE GROUNDING ELECTRODE CONDUCTOR SIZE SHALL BE DETERMINED BY THE EQUIVALENT SIZE OF THE LARGEST SERVICE-ENTRANCE CONDUCTOR REQUIRED FOR THE LOAD TO BE SERVED.
   A. THIS TABLE ALSO APPLIES TO THE DERIVED CONDUCTORS OF SEPARATELY DERIVED AC SYSTEMS
   B. SEE INSTALLATION RESTRICTIONS IN 250.64(A)

CO AR

CO-AR DESIGN, INC.
680 Brea Canyon Rd., Ste. 178
Diamond Bar, CA 91789

Office: 909-598-0186
http:\\www.coardesign.com

Dennis J. Lee, Architect
dennisl@coardesign.com

THESE DRAWINGS ARE THE PROPERTY OF THE ARCHITECT. THE DESIGNS SHOWN AND DESCRIBED HERIN INCLUDING ALL TECHNICAL DRAWINGS ARE PROPRIETARY AND CANNOT BE COPIED, DUPLICATED OR COMMERCIALLY EXPLOITED, IN WHOLE OR IN PART. THE DRAWINGS AND SPECIFICATIONS SHALL NOT BE USED BY THE OWNER ON OTHER PROJECTS, FOR ADDITIONS TO THIS PROJECT, OR FOR COMPLETION OF THIS PROJECT BY OTHERS. THE OWNER AGREES TO HOLD HARMLESS, INDEMNIFY AND DEFEND THE ARCHITECT AGAINST ALL DAMAGES, CLAIMS AND LOSSES, INCLUDING DEFENSE COSTS, ARISING OUT OF ANY REUSE OF THE PLANS AND SPECIFICATIONS WITHOUT THE WRITTEN AUTHORIZATION OF THE ARCHITECT OF RECORD.

COPYRIGHT © 2022 CO-AR DESIGN, INC., ALL RIGHTS RESERVED.

SEAL:
REGISTERED PROFESSIONAL ENGINEER
DENNIS P. S. CHEUNG
No.9279
EXP.09/30/23
ELECTRICAL
STATE OF CALIFORNIA

NOTES

JHP Engineering and Design Services Inc.
3103 Independence Drive
Livermore, CA 94551
TEL: 925-409-2508
CEL: 510-468-0613
FAX: 510-788-6039

PROJECT:
SALTALK FREMONT KITCHEN TENANT IMPROVEMENT

42550 ALBRAE ST.,
FREMONT, CA 94538

CLIENT

SALTALK, INC.
3334 VICTOR CT.,
SANTA CLARA, CA 95054

SUBMITTALS/ REVISIONS

4	1ST PLANNING SUBMITTAL	2/10/22
5	SCHEMATIC DESIGN	3/7/22
6	1ST HEALTH SUBMITTAL	4/7/22
7	1ST BLDG SUBMITTAL	4/11/22
8	2ND BLDG SUBMITTAL	7/29/22
9	2ND HEALTH SUBMITTAL	9/29/22

PROJECT NO	21127
SCALE	AS SHOWN
DATE	2/10/2022
DRAWN BY	TL / YC
CHECKED BY	JP

SHEET TITLE
ELECTRICAL NOTES AND INFORMATION

SHEET NO
E-0.1

STATE OF CALIFORNIA

Indoor Lighting

NRCC-LTI-E (Created 10/20) CALIFORNIA ENERGY COMMISSION

CERTIFICATE OF COMPLIANCE		NRCC-LTI-E
This document is used to demonstrate compliance with requirements in §110.9, §110.12(c), §130.0, §130.1, §140.6, and §141.0(b)2 for indoor lighting scopes using the prescriptive path.		
Project Name: SALTALK FREMONT KITCHEN TENANT IMPROVEMENT	Report Page:	Page 1 of 7
Project Address: 42550 ALBRAE ST., FREMONT, CA 94538	Date Prepared:	04/01/2022

A. GENERAL INFORMATION

01	Project Location (city)	FREMONT	04	Total Conditioned Floor Area (ft^2)	15,000
02	Climate Zone	3	05	Total Unconditioned Floor Area (ft^2)	
03	Occupancy Types Within Project (select all that apply):		06	# of Stories (Habitable Above Grade)	

- ☐ Office ☑ Retail ☐ Warehouse ☐ Hotel/Motel ☐ School ☐ Support Areas
- ☐ Parking Garage ☐ High-Rise Residential ☐ Relocatable ☐ Healthcare ☐ Other (write in):

B. PROJECT SCOPE

Table Instructions: Include any lighting systems that are within the scope of the permit application and are demonstrating compliance using the prescriptive path outlined in §140.6 or §141.0(b)2 for alterations. WARNING: Changing the Calculation Method in this table will result in the deletion of data previously input. If you need to change the calculation method, please open a new form or use "Save As".

Scope of Work	Conditioned Spaces		Unconditioned Spaces	
01	02	03	04	05
My Project Consists of (check all that apply):	Calculation Method	Area (ft^2)	Calculation Method	Area (ft^2)
☑ New Lighting System	Area Category	15,000		
☐ Altered Lighting System				
Total Area of Work (ft^2)	15,000			

C. COMPLIANCE RESULTS

Table Instructions: If any cell on this table says "DOES NOT COMPLY" or "COMPLIES with Exceptional Conditions" refer to Table D. for guidance.

Lighting in conditioned and unconditioned spaces must not be combined for compliance per §140.6(b)1.	Allowed Lighting Power per §140.6(b) (Watts)							Adjusted Lighting Power per §140.6(a) (Watts)				Compliance Results
	01	02	03	04		05		06	07		08	09
	Complete Building §140.6(c)1	Area Category §140.6(c)2	Area Category Additional §140.6(c)2G (+)	Tailored §140.6(c)3 (+)	=	Total Allowed (Watts)	≥	Total Designed (Watts)	Adjustments: PAF Control Credits §140.6(a)2 (-)	=	Total Adjusted (Watts) *Includes Adjustments	05 Must be ≥ 08 §140.6
	(See Table I)	(See Table I)	(See Table J)	(See Table K)				(See Table F)	(See Table P)			
Conditioned:		12,893.25			=	12,893.25	≥	9,130		=	9,130	COMPLIES
Unconditioned:					=		≥			=		

Table Continued

STATE OF CALIFORNIA

Indoor Lighting

NRCC-LTI-E (Created 10/20) CALIFORNIA ENERGY COMMISSION

CERTIFICATE OF COMPLIANCE		NRCC-LTI-E
Project Name: SALTALK FREMONT KITCHEN TENANT IMPROVEMENT	Report Page:	Page 2 of 7
Project Address: 42550 ALBRAE ST., FREMONT, CA 94538	Date Prepared:	04/01/2022

Controls Compliance (See Table H for Details)	COMPLIES
Rated Power Reduction Compliance (See Table Q for Details)	Not Applicable

D. EXCEPTIONAL CONDITIONS

This table is auto-filled with uneditable comments because of selections made or data entered in tables throughout the form.

No exceptional conditions apply to this project.

E. ADDITIONAL REMARKS

This table includes remarks made by the permit applicant to the Authority Having Jurisdiction.

F. INDOOR LIGHTING FIXTURE SCHEDULE

Table Instructions: Include all permanent designed lighting and all portable lighting in offices.

Designed Wattage: Conditioned Spaces

01	02	03	04	05	06	07	08	09	10	
Name or Item Tag	Complete Luminaire Description	Modular (Track) Fixture	Small Aperture & Color Change[1]	Watts per luminaire[2]	How Wattage is determined	Total number luminaires	Exempt per §140.6(a)3	Design Watts	Field Inspector Pass	Field Inspector Fail
FA	2x4 Recessed LED, DIM	☐	☐	54	Mfr. Spec[2]	113	☐	6,102	☐	☐
FB	6 inch, LED rece. downlight, DIM	☐	☐	20	Mfr. Spec[2]	24	☐	480	☐	☐
FC	Linear LED Fix., DIM	☐	☐	49	Mfr. Spec[2]	52	☐	2,548	☐	☐
						Total Designed Watts CONDITIONED SPACES:		9,130		

4

[1] *FOOTNOTE: Design Watts for small aperture and color changing luminaires which qualify per §140.6(a)4B is adjusted to be 75% of their rated wattage. Table F automatically makes this adjustment, the permit applicant should enter full rated wattage in column 05.*

[2] *Authority Having Jurisdiction may ask for Luminaire cut sheets to confirm wattage used for compliance per §130.0(c) Wattage used must be the maximum rated for the luminaire, not the lamp.*

G. MODULAR LIGHTING SYSTEMS

This Section Does Not Apply

H. INDOOR LIGHTING CONTROLS (Not Including PAFs)

STATE OF CALIFORNIA

Indoor Lighting

NRCC-LTI-E (Created 10/20) CALIFORNIA ENERGY COMMISSION

CERTIFICATE OF COMPLIANCE		NRCC-LTI-E
Project Name: SALTALK FREMONT KITCHEN TENANT IMPROVEMENT	Report Page:	Page 3 of 7
Project Address: 42550 ALBRAE ST., FREMONT, CA 94538	Date Prepared:	04/01/2022

*Table Instructions: Please include lighting controls for conditioned and unconditioned spaces in this table. When an option having a * is selected, the notes section of this table must be completed. The lighting controls section of the Compliance Summary Table on the first page will show "DOES NOT COMPLY" if the notes are left blank.*

Building Level Controls

01	02	03	
Mandatory Demand Response §110.12(c)	Shut-Off Controls §130.1(c)	Field Inspector Pass	Field Inspector Fail
Required > 10,000 SF	Whole Building Timeswitch	☐	☐

Area Level Controls

04	05	06	07	08	09	10	11	12	
Area Description	Complete Building or Area Category Primary Function Area	Area Controls §130.1(a)	Multi-Level Controls §130.1(b)	Shut-Off Controls §130.1(c)	Primary/Skylit Daylighting §130.1(d)	Secondary Daylighting §140.6(d)	Interlocked Systems §140.6(a)1	Field Inspector Pass	Field Inspector Fail
Lobby	Main Entry Lobby	Manual ON/ OFF	Dimmer	See Bldg Lvl	NA	NA	☐	☐	☐
Corridor	Corridor	Manual ON/ OFF	Dimmer	See Bldg Lvl	NA	NA	☐	☐	☐
Restrooms	Restroom	Manual ON/ OFF	Dimmer	See Bldg Lvl	NA	NA	☐	☐	☐
Kitchen	Kitchen, Food Preparation	Manual ON/ OFF	Dimmer	See Bldg Lvl	NA	NA	☐	☐	☐

*NOTES: Controls with a * require a note in the space below explaining how compliance is achieved.
EX: Conference 1: Primary/Skylight Daylighting: Exempt because less than 120 watts of general lighting; EXCEPTION 1 to §130.1(d)2

13 — Plan Sheet Showing Daylit Zones:

I. LIGHTING POWER ALLOWANCE: COMPLETE BUILDING OR AREA CATEGORY METHODS

Table Instructions: Complete the table for each area complying using the Complete Building or Area Category Methods per §140.6(b). Indicate if additional lighting power allowances per §140.6(c) or adjustments per §140.6(a) are being used.

Conditioned Spaces

01	02	03	04	05	06	
Area Description	Complete Building or Area Category Primary Function Area	Allowed Density (W/ft^2)	Area (ft^2)	Allowed Wattage (Watts)	Additional Allowances / Adjustment: Area Category	PAF

STATE OF CALIFORNIA

Indoor Lighting

NRCC-LTI-E (Created 10/20) CALIFORNIA ENERGY COMMISSION

CERTIFICATE OF COMPLIANCE		NRCC-LTI-E
Project Name: SALTALK FREMONT KITCHEN TENANT IMPROVEMENT	Report Page:	Page 4 of 7
Project Address: 42550 ALBRAE ST., FREMONT, CA 94538	Date Prepared:	04/01/2022

01	02	03	04	05	06	
Area Description	Complete Building or Area Category Primary Function Area	Allowed Density (W/ft^2)	Area (ft^2)	Allowed Wattage (Watts)	Additional Allowances / Adjustment: Area Category	PAF
Lobby	Main Entry Lobby	0.85	1,760	1,496	☐	☐
Corridor	Corridor	0.6	2,825	1,695	☐	☐
Restroom	Restroom	0.65	640	416	☐	☐
Kitchen	Kitchen, Food Preparation	0.95	9,775	9,286.25	☐	☐
		TOTAL:	15,000	12,893.25	See Tables J or P for detail	

J. ADDITIONAL LIGHTING ALLOWANCE: AREA CATEGORY METHOD QUALIFYING LIGHTING SYSTEM

This Section Does Not Apply

K. TAILORED METHOD GENERAL LIGHTING POWER ALLOWANCE

This Section Does Not Apply

L. ADDITIONAL LIGHTING ALLOWANCE: TAILORED WALL DISPLAY

This Section Does Not Apply

M. ADDITIONAL LIGHTING ALLOWANCE: TAILORED FLOOR AND TASK LIGHTING

This Section Does Not Apply

N. ADDITIONAL LIGHTING ALLOWANCE: TAILORED ORNAMENTAL/SPECIAL EFFECTS

This Section Does Not Apply

O. ADDITIONAL LIGHTING ALLOWANCE: TAILORED VERY VALUABLE MERCHANDISE

This Section Does Not Apply

P. POWER ADJUSTMENT: LIGHTING CONTROL CREDIT (POWER ADJUSTMENT FACTOR (PAF))

This Section Does Not Apply

STATE OF CALIFORNIA

Indoor Lighting

NRCC-LTI-E (Created 10/20) CALIFORNIA ENERGY COMMISSION

CERTIFICATE OF COMPLIANCE		NRCC-LTI-E
Project Name: SALTALK FREMONT KITCHEN TENANT IMPROVEMENT	Report Page:	Page 5 of 7
Project Address: 42550 ALBRAE ST., FREMONT, CA 94538	Date Prepared:	04/01/2022

Q. RATED POWER REDUCTION COMPLIANCE FOR ALTERATIONS

This Section Does Not Apply

R. 80% LIGHTING POWER FOR ALTERATIONS - CONTROLS EXCEPTIONS

This Section Does Not Apply

S. DAYLIGHT DESIGN POWER ADJUSTMENT FACTOR (PAF)

This Section Does Not Apply

T. DECLARATION OF REQUIRED CERTIFICATES OF INSTALLATION

Table Instructions: Selections have been made based on information provided in previous tables of this document. If any selection needs to be changed, please explain why in Table E. Additional Remarks. These documents must be provided to the building inspector during construction and can be found online at https://ww2.energy.ca.gov/title24/2019standards/2019_compliance_documents/Nonresidential_Documents/NRCI/

YES	NO	Form/Title	Field Inspector Pass	Field Inspector Fail
●	○	NRCI-LTI-01-E - Must be submitted for all buildings	☐	☐
○	●	NRCI-LTI-02-E - Must be submitted for a lighting control system, or for an Energy Management Control System (EMCS), to be recognized for compliance.	☐	☐
○	●	NRCI-LTI-04-E - Must be submitted for two interlocked systems serving an auditorium, a convention center, a conference room, a multipurpose room, or a theater to be recognized for compliance.	☐	☐
○	●	NRCI-LTI-05-E - Must be submitted for a Power Adjustment Factor (PAF) to be recognized for compliance.	☐	☐
○	●	NRCI-LTI-06-E - Must be submitted for additional wattage installed in a video conferencing studio to be recognized for compliance.	☐	☐

STATE OF CALIFORNIA

Indoor Lighting

NRCC-LTI-E (Created 10/20) CALIFORNIA ENERGY COMMISSION

CERTIFICATE OF COMPLIANCE		NRCC-LTI-E
Project Name: SALTALK FREMONT KITCHEN TENANT IMPROVEMENT	Report Page:	Page 6 of 7
Project Address: 42550 ALBRAE ST., FREMONT, CA 94538	Date Prepared:	04/01/2022

U. DECLARATION OF REQUIRED CERTIFICATES OF ACCEPTANCE

Table Instructions: Selections have been made based on information provided in previous tables of this document. If any selection needs to be changed, please explain why in Table E. Additional Remarks. These documents must be provided to the building inspector during construction and any with "-A" in the form name must be completed through an Acceptance Test Technician Certification Provider (ATTCP). For more information visit: http://www.energy.ca.gov/title24/attcp/providers.html

YES	NO	Form/Title	Field Inspector Pass	Field Inspector Fail
●	○	NRCA-LTI-02-A - Must be submitted for occupancy sensors and automatic time switch controls.	☐	☐
○	●	NRCA-LTI-03-A - Must be submitted for automatic daylight controls.	☐	☐
●	○	NRCA-LTI-04-A - Must be submitted for demand responsive lighting controls.	☐	☐
○	●	NRCA-LTI-05-A - Must be submitted for institutional tuning power adjustment factor (PAF).	☐	☐
○	●	NRCA-ENV-03-F - Must be submitted for daylighting design power adjustment factors (PAF).	☐	☐

STATE OF CALIFORNIA

Indoor Lighting

NRCC-LTI-E (Created 10/20) CALIFORNIA ENERGY COMMISSION

CERTIFICATE OF COMPLIANCE		NRCC-LTI-E
Project Name: SALTALK FREMONT KITCHEN TENANT IMPROVEMENT	Report Page:	Page 7 of 7
Project Address: 42550 ALBRAE ST., FREMONT, CA 94538	Date Prepared:	04/01/2022

DOCUMENTATION AUTHOR'S DECLARATION STATEMENT

I certify that this Certificate of Compliance documentation is accurate and complete

Documentation Author Name:	Dennis Cheung	Documentation Author Signature:	[signature]
Company:	JHP ENGINEERING AND DESIGN INC.	Signature Date:	04/01/2022
Address:	3103 INDEPENDENCE DRIVE	CEA/ HERS Certification Identification (if applicable):	
City/State/Zip:	LIVERMORE, CA 94551	Phone:	415-982-1828

RESPONSIBLE PERSON'S DECLARATION STATEMENT

I certify the following under penalty of perjury, under the laws of the State of California:

1. **The information provided on this Certificate of Compliance is true and correct.**
2. **I am eligible under Division 3 of the Business and Professions Code to accept responsibility for the building design or system design identified on this Certificate of Compliance (responsible designer)**
3. **The energy features and performance specifications, materials, components, and manufactured devices for the building design or system design identified on this Certificate of Compliance conform to the requirements of Title 24, Part 1 and Part 6 of the California Code of Regulations.**
4. **The building design features or system design features identified on this Certificate of Compliance are consistent with the information provided on other applicable compliance documents, worksheets, calculations, plans and specifications submitted to the enforcement agency for approval with this building permit application.**
5. **I will ensure that a completed signed copy of this Certificate of Compliance shall be made available with the building permit(s) issued for the building, and made available to the enforcement agency for all applicable inspections. I understand that a completed signed copy of this Certificate of Compliance is required to be included with the documentation the builder provides to the building owner at occupancy.**

Responsible Designer Name:	Dennis Cheung	Responsible Designer Signature:	[signature]
Company :	JHP ENGINEERING AND DESIGN INC.	Date Signed:	04/01/2022
Address:	3103 INDEPENDENCE DRIVE	License:	E9279
City/State/Zip:	LIVERMORE, CA 94551	Phone:	415-982-1828

Alameda County
Dept. of Environmental Health
Approved By: T. Tran

CO AR

CO-AR DESIGN, INC.
680 Brea Canyon Rd., Ste. 178
Diamond Bar, CA 91789

Office: 909-598-0186
http:\\www.coardesign.com

Dennis J. Lee, Architect
dennisl@coardesign.com

THESE DRAWINGS ARE THE PROPERTY OF THE ARCHITECT. THE DESIGNS SHOWN AND DESCRIBED HERIN INCLUDING ALL TECHNICAL DRAWINGS ARE PROPRIETARY AND CANNOT BE COPIED, DUPLICATED OR COMMERCIALLY EXPLOITED, IN WHOLE OR IN PART. THE DRAWINGS AND SPECIFICATIONS SHALL NOT BE USED BY THE OWNER ON OTHER PROJECTS, FOR ADDITIONS TO THIS PROJECT, OR FOR COMPLETION OF THIS PROJECT BY OTHERS. THE OWNER AGREES TO HOLD HARMLESS, INDEMNIFY AND DEFEND THE ARCHITECT AGAINST ALL DAMAGES, CLAIMS AND LOSSES, INCLUDING DEFENSE COSTS, ARISING OUT OF ANY REUSE OF THE PLANS AND SPECIFICATIONS WITHOUT THE WRITTEN AUTHORIZATION OF THE ARCHITECT OF RECORD

COPYRIGHT © 2022 CO-AR DESIGN, INC., ALL RIGHTS RESERVED

SEAL:
REGISTERED PROFESSIONAL ENGINEER
DENNIS P. S. CHEUNG
No.9279
EXP.09/30/23
ELECTRICAL
STATE OF CALIFORNIA

NOTES:

JHP Engineering and Design Services Inc.
3103 Independence Drive
Livermore, CA 94551
TEL: 925-409-2508
CEL: 510-468-0613
FAX: 510-788-6039

PROJECT
SALTALK FREMONT KITCHEN TENANT IMPROVEMENT

42550 ALBRAE ST.,
FREMONT, CA 94538

CLIENT
SALTALK, INC.
3334 VICTOR CT.,
SANTA CLARA, CA 95054

SUBMITTALS/ REVISIONS:

4	1ST PLANNING SUBMITTAL	2/10/22
5	SCHEMATIC DESIGN	3/7/22
6	1ST HEALTH SUBMITTAL	4/7/22
7	1ST BLDG SUBMITTAL	4/11/22
8	2ND BLDG SUBMITTAL	7/29/22
9	2ND HEALTH SUBMITTAL 4	9/29/22

PROJECT NO:	21127
SCALE:	AS SHOWN
DATE:	2/10/2022
DRAWN BY:	TL / YC
CHECKED BY:	JP

SHEET TITLE
ENERGY COMPLIANCE FORMS

SHEET NO:
E-0.2

Alameda County
Dept. of Environmental Health
Approved By: T. Tran

TYPE	SYMBOL	QTY	DESCRIPTION	MANUFACTURER	SPEC	MOUNTING HEIGHT	NOTES / REMARKS
A		91	2X4 LED ARCHITECTURAL RECESSED TROFFER	ORACLE LIGHTING	24-FPL-BL-LED (4000K)	SEE PLAN	KITCHEN
B		25	6" DIA. LED RECESSED DOWNLIGHT (@ RESTROOMS & DRINKING FOUNTAIN)	ELITE LIGHTING	HH6-LED (4000K)	SEE PLAN	RESTROOM
C1	C1	44	8' LED STRIP PENDANT LIGHT	ORACLE LIGHTING	OC1-LED (4000K)	HEIGHT VARIES, SEE PLAN, SUSPENDED MOUNTING	CORRIDORS
C2	C2	11	8' LED STRIP PENDANT LIGHT	ORACLE LIGHTING	OLS-D-LED	10'-0" A.F.F., SUSPENDED MOUNTING	DINING AREA
W		20	FREEZER AND COOLER LIGHTS TO BE RPOVIDED BY WALK-IN BOX MANUFACTURER, TYP.			SEE PLAN	W.I.C. / W.I.F.
X1	▲	11	EXIT SIGN	MAXILUME	ELX-603		

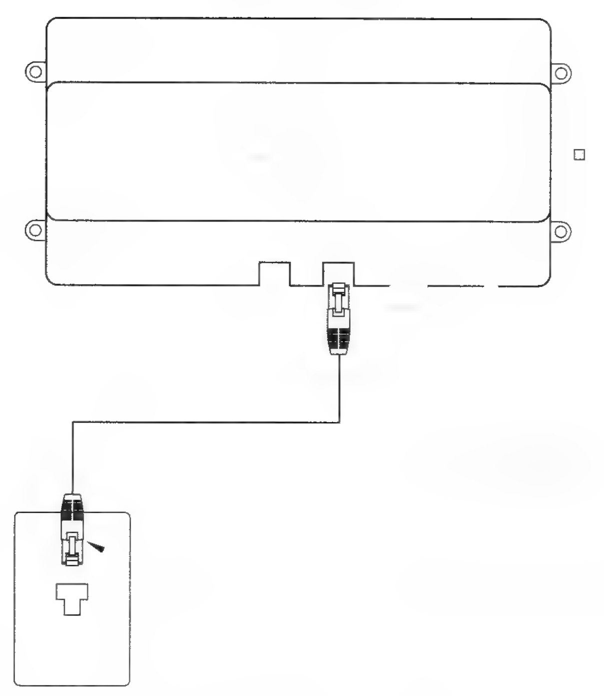

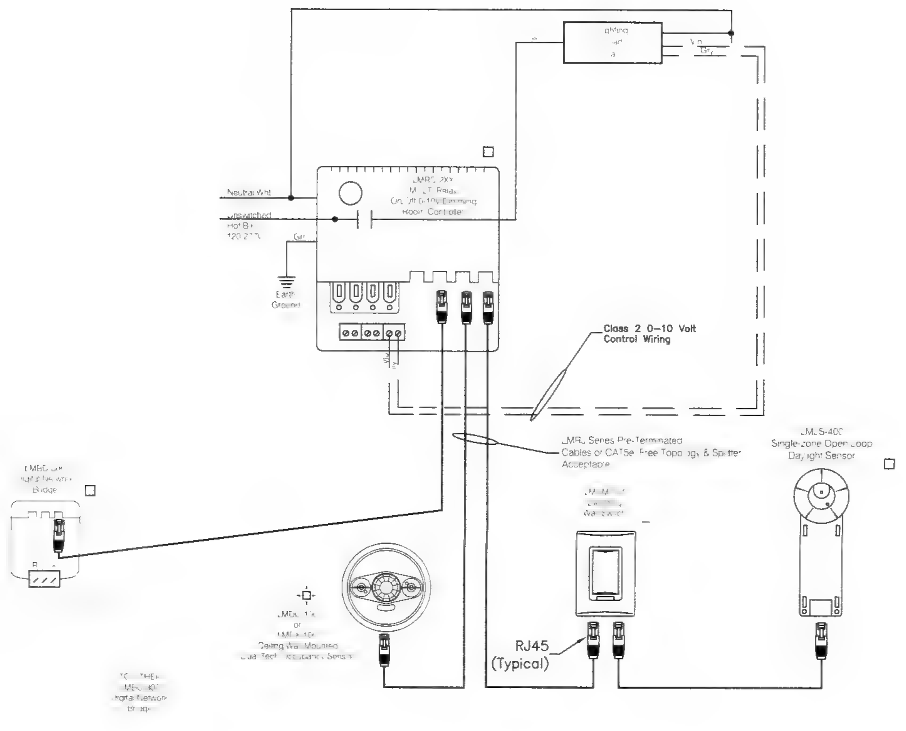

CO-AR DESIGN, INC.
680 Brea Canyon Rd., Ste. 178
Diamond Bar, CA 91789

Office: 909-598-0186
http:\\www.coardesign.com

Dennis J. Lee, Architect
dennisl@coardesign.com

THESE DRAWINGS ARE THE PROPERTY OF THE ARCHITECT. THE DESIGNS SHOWN AND DESCRIBED HERIN INCLUDING ALL TECHNICAL DRAWINGS ARE PROPRIETARY AND CANNOT BE COPIED, DUPLICATED OR COMMERCIALLY EXPLOITED, IN WHOLE OR IN PART. THE DRAWINGS AND SPECIFICATIONS SHALL NOT BE USED BY THE OWNER ON OTHER PROJECTS, FOR ADDITIONS TO THIS PROJECT, OR FOR COMPLETION OF THIS PROJECT BY OTHERS. THE OWNER AGREES TO HOLD HARMLESS, INDEMNIFY AND DEFEND THE ARCHITECT AGAINST ALL DAMAGES, CLAIMS AND LOSSES, INCLUDING DEFENSE COSTS, ARISING OUT OF ANY REUSE OF THE PLANS AND SPECIFICATIONS WITHOUT THE WRITTEN AUTHORIZATION OF THE ARCHITECT OF RECORD

COPYRIGHT © 2022 CO-AR DESIGN, INC., ALL RIGHTS RESERVED

SEAL

REGISTERED PROFESSIONAL ENGINEER
DENNIS P. S. CHEUNG
No.9279
EXP.09/30/23
ELECTRICAL
STATE OF CALIFORNIA

NOTES

JHP Engineering and Design Services Inc.
3103 Independence Drive
Livermore, CA 94551
TEL: 925-409-2508
CEL: 510-468-0613
FAX: 510-788-6039

PROJECT

SALTALK FREMONT KITCHEN TENANT IMPROVEMENT

42550 ALBRAE ST.,
FREMONT, CA 94538

CLIENT

SALTALK, INC.
3334 VICTOR CT.,
SANTA CLARA, CA 95054

SUBMITTALS/ REVISIONS

4	1ST PLANNING SUBMITTAL	2/10/22
5	SCHEMATIC DESIGN	3/7/22
6	1ST HEALTH SUBMITTAL	4/7/22
7	1ST BLDG SUBMITTAL	4/11/22
8	2ND BLDG SUBMITTAL	7/29/22
9	2ND HEALTH SUBMITTAL	9/29/22

PROJECT NO	21127
SCALE	AS SHOWN
DATE	2/10/2022
DRAWN BY	TL / YC
CHECKED BY	JP

SHEET TITLE

LIGHTING SCHEDULE AND CONTROL DIAGRAMS

SHEET NO

E-0.3

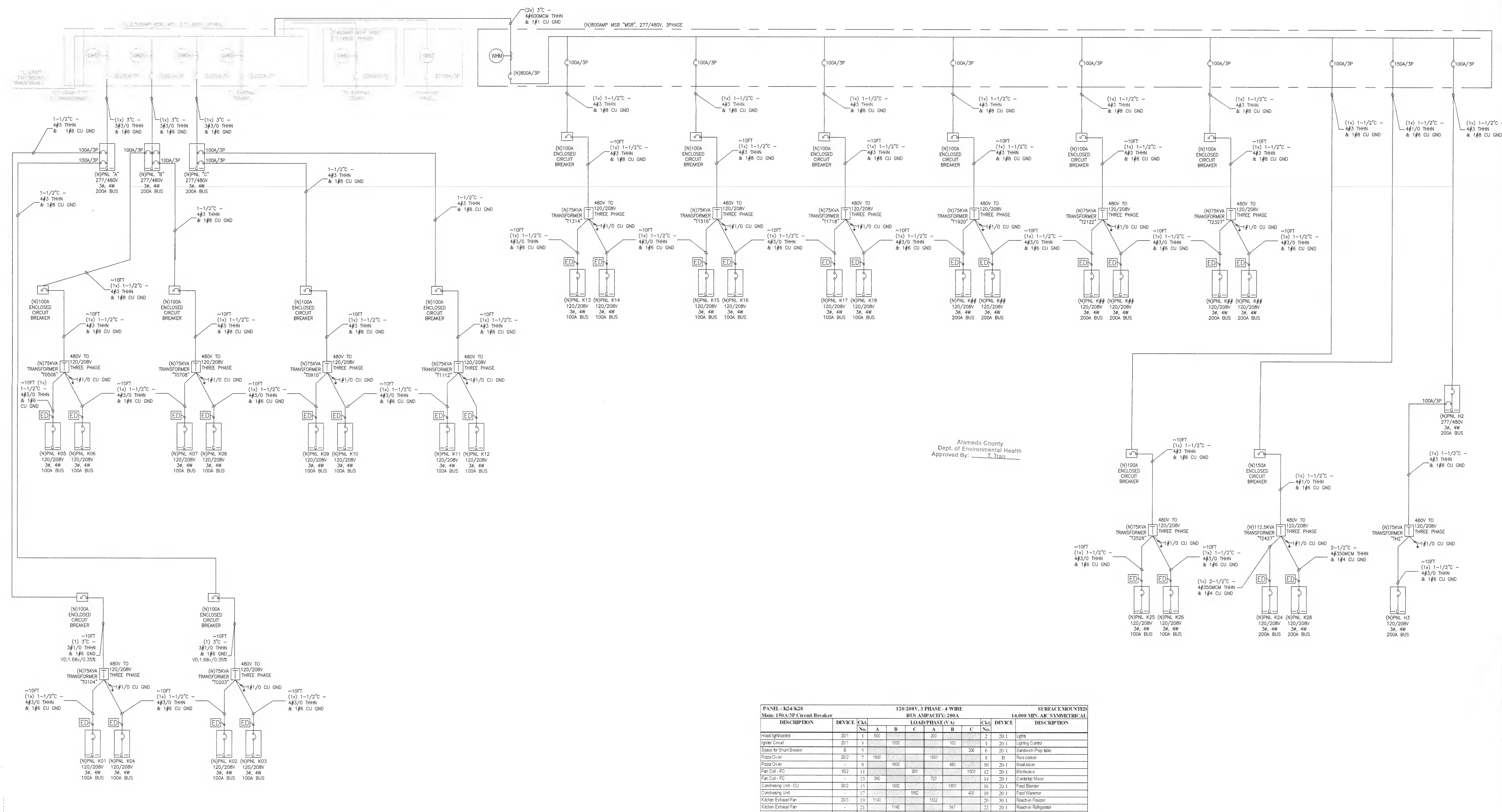

PANEL : H2			277/480V, 3 PHASE - 4 WIRE								SURFACE MOUNTED
MAIN; 200A/3P			BUS AMPACITY: 200A								14,000 MIN. AIC SYMMETRICAL
DESCRIPTION	DEVICE	Ckt.	LOAD/PHASE (VA)						Ckt.	DEVICE	DESCRIPTION
		No.	A	B	C	A	B	C	No.		
Roof Top Unit	40/3	1	10790			5000			2	20/1	Lights
Roof Top Unit	-	3		10790			500		4	20/1	Light controls
Roof Top Unit	-	5			10790				6	20/1	Spare
'Blank	B	7							8	20/1	Spare
'Blank	B	9							10	20/1	Spare
'Blank	B	11							12	20/1	Spare
'Blank	B	13							14	B	Blank
'Blank	B	15							16	B	Blank
'Blank	B	17							18	B	Blank
'Blank	B	19							20	B	Blank
'Blank	B	21							22	B	Blank
'Blank	B	23							24	B	Blank
Transformer "TH2"	100/3	25	25000						26	B	Blank
Transformer "TH2"	-	27		25000					28	B	Blank
Transformer "TH2"	-	29			25000				30	B	Blank
SUBTOTAL (VA)			35790	35790	35790	5000	500	0	SUBTOTAL (VA)		
TOTAL ALL PHASES (VA)			PHASE A		PHASE B		PHASE C		TOTAL ALL PHASES (AMPS)		
112870			40790		36290		35790		136		

PANEL : H3			120/208V, 3 PHASE - 4 WIRE								SURFACE MOUNTED
Main: 200A/3P Circuit Breaker			BUS AMPACITY: 200A								14,000 MIN. AIC SYMMETRICAL
DESCRIPTION	DEVICE	Ckt.	LOAD/PHASE (VA)						Ckt.	DEVICE	DESCRIPTION
		No.	A	B	C	A	B	C	No.		
Sign	20/1	1	100			1000			2	20/1	Exterior Sign
Smart Locker system	20/1	3		500			360		4	20/1	GFIC Rec - Trash Enclosure
Smart Locker system	20/1	5			500			1000	6	20/1	Air Curtain
Smart Locker system	20/1	7	500			500			8	20/1	Water Fountain
Smart Locker system	20/1	9		500			500		10	20/1	Water Fountain
Ice Machine	20/1	11			1000			500	12	20/1	Receptacle
Server Power	20/1	13	1000			1000			14	20/2	Hand Dryer
Server Power	20/1	15		1000			1000		16	-	Hand Dryer
Server Power	20/1	17			1000			1000	18	20/2	Hand Dryer
Air Curtain	20/1	19	1000			1000			20	-	Hand Dryer
Walk-in condenser	40/2	21		2000			1000		22	20/2	Hand Dryer
Walk-in condenser	-	23			2000			1000	24	-	Hand Dryer
Walk-in condenser	20/1	25	1080			1000			26	20/2	Hand Dryer
Walk-in condenser	40/2	27		3000			1000		28	-	Hand Dryer
Walk-in condenser	-	29			3000			1000	30	20/1	Air Curtain
Walk-in condenser	40/2	31	3000			100			32	20/1	Circulating pump
Walk-in condenser	-	33		3000			360		34	20/1	Watet heater igniter
Evaporate Coil	20/2	35			1500			1000	36	20/1	Ice macheine
Evaporate Coil	-	37	1500			1200			38	70/3	Walk-in Lights
Evaporate Coil	20/2	39		1500			1500		40	20/2	Evaporating coil
Evaporate Coil	-	41			1500			1500	42	-	Evaporating coil
SUBTOTAL (VA)			8180	11500	10500	5800	5720	7000	SUBTOTAL (VA)		
TOTAL ALL PHASES (VA)			PHASE A		PHASE B		PHASE C		TOTAL ALL PHASES (AMPS)		
48700			13980		17220		17500		135		

PANEL : K24/K28			120/208V, 3 PHASE - 4 WIRE								SURFACE MOUNTED
Main: 150A/3P Circuit Breaker			BUS AMPACITY: 200A								14,000 MIN. AIC SYMMETRICAL
DESCRIPTION	DEVICE	Ckt.	LOAD/PHASE (VA)						Ckt.	DEVICE	DESCRIPTION
		No.	A	B	C	A	B	C	No.		
Hood light/control	20/1	1	500			200			2	20/1	Lights
Igniter Circuit	20/1	3		1000			100		4	20/1	Lighting Control
Space for Shunt Breaker	B	5						336	6	20/1	Sandwich Prep table
Pizza Oven	20/2	7	1600			1550			8	B	Rice cooker
Pizza Oven	-	9		1600			480		10	20/1	Meat slicer
Fan Coil - FC	15/2	11			200			1000	12	20/1	Micriwave
Fan Coil - FC	-	13	360			720			14	20/1	Contertop Mixer
Condnesing Unit - CU	30/2	15		1882			1800		16	20/1	Food Blender
Condnesing Unit	-	17			1882			400	18	20/1	Food Waremer
Kitchen Exhaust Fan	20/3	19	1140			1332			20	30/1	Reach-in Freezer
Kitchen Exhaust Fan	-	21		1140			547		22	20/1	Reach-in Refrigerator
Kitchen Exhaust Fan	-	23			1140			100	24	20/1	Plumbing Trap Primer
Make-up air Unit - MAU	20/3	25	996			6666			26	70/3	Cooking Robot
Make-up air Unit - MAU	-	27		996			6666		28	-	Cooking Robot
Make-up air Unit - MAU	-	29			996			6667	30	-	Cooking Robot
SUBTOTAL (VA)			4596	6618	4218	10468	9593.2	8503	SUBTOTAL (VA)		
TOTAL ALL PHASES (VA)			PHASE A		PHASE B		PHASE C		TOTAL ALL PHASES (AMPS)		
43996.2			15064		16211.2		12721		122		

PANEL : K## (Typ Kitchen unit panel)			120/208V, 3 PHASE - 4 WIRE								SURFACE MOUNTED
Main: 100A/3P Circuit Breaker			BUS AMPACITY: 100A								14,000 MIN. AIC SYMMETRICAL
DESCRIPTION	DEVICE	Ckt.	LOAD/PHASE (VA)						Ckt.	DEVICE	DESCRIPTION
		No.	A	B	C	A	B	C	No.		
Hood light/control	20/1	1	500			200			2	20/1	Lights
Igniter Circuit	20/1	3		1000			100		4	20/1	Lighting Control
Space for Shunt Breaker	20/1	5			1000			336	6	20/1	Sandwich Prep table
Pizza Oven	20/2	7	1600			1550			8	20/1	Rice cooker
Pizza Oven	-	9		1600			480		10	20/1	Meat slicer
Fan Coil - FC	15/2	11			200			1000	12	20/1	Micriwave
Fan Coil - FC	-	13	360			720			14	20/1	Contertop Mixer
Condnesing Unit - CU	30/2	15		1882			1800		16	20/1	Food Blender
Condnesing Unit	-	17			1882			400	18	20/1	Food Waremer
Kitchen Exhaust Fan	20/3	19	1140			1332			20	30/1	Reach-in Freezer
Kitchen Exhaust Fan	-	21		1140			547		22	20/1	Reach-in Refrigerator
Kitchen Exhaust Fan	-	23			1140			100	24	20/1	Plumbing Trap Primer
Make-up air Unit - MAU	20/3	25	996						26	20/1	Spare
Make-up air Unit - MAU	-	27		996					28	20/1	Spare
Make-up air Unit - MAU	-	29			996				30	20/1	Spare
SUBTOTAL (VA)			4596	6618	5218	3802	2927.2	1836	SUBTOTAL (VA)		
TOTAL ALL PHASES (VA)			PHASE A		PHASE B		PHASE C		TOTAL ALL PHASES (AMPS)		
24997.2			8398		9545.2		7054		69		

PANEL : MS-8			277/480V, 3 PHASE - 4 WIRE								SURFACE MOUNTED
MAIN; 800a/3p			BUS AMPACITY: 800A								14,000 MIN. AIC SYMMETRICAL
DESCRIPTION	DEVICE	Ckt.	LOAD/PHASE (VA)						Ckt.	DEVICE	DESCRIPTION
		No.	A	B	C	A	B	C	No.		
75KVA Transformer	100/3	1	25000			25000			2	100/3	75KVA Transformer
75KVA Transformer	-	3		25000			25000		4	-	75KVA Transformer
75KVA Transformer	-	5			25000			25000	6	-	75KVA Transformer
75KVA Transformer	100/3	7	25000			25000			8	100/3	75KVA Transformer
75KVA Transformer	-	9		25000			25000		10	-	75KVA Transformer
75KVA Transformer	-	11			25000			25000	12	-	75KVA Transformer
75KVA Transformer	100/3	13	25000			25000			14	100/3	75KVA Transformer
75KVA Transformer	-	15		25000			25000		16	-	75KVA Transformer
75KVA Transformer	-	17			25000			25000	18	-	75KVA Transformer
75KVA Transformer	100/3	19	25000			37500			20	150/3	112.5KVA Transformer
75KVA Transformer	-	21		25000			37500		22	-	112.5KVA Transformer
75KVA Transformer	-	23			25000			37500	24	-	112.5KVA Transformer
75KVA Transformer	100/3	25	25000			40790			26	100/3	Panel "H2"
75KVA Transformer	-	27		25000			36290		28	-	Panel "H2"
75KVA Transformer	-	29			25000			35790	30	-	Panel "H2"
SUBTOTAL (VA)			125000	125000	125000	153290	148790	148290	SUBTOTAL (VA)		
TOTAL ALL PHASES (VA)			PHASE A		PHASE B		PHASE C		TOTAL ALL PHASES (AMPS)		
825370			278290		273790		273290		993		
						Demand @ 65% for kitchen e					645

CO-AR DESIGN, INC.
680 Brea Canyon Rd., Ste. 178
Diamond Bar, CA 91789

Office: 909-598-0186
http:\\www.coardesign.com

Dennis J. Lee, Architect
dennisl@coardesign.com

THESE DRAWINGS ARE THE PROPERTY OF THE ARCHITECT. THE DESIGNS SHOWN AND DESCRIBED HERIN INCLUDING ALL TECHNICAL DRAWINGS ARE PROPRIETARY AND CANNOT BE COPIED, DUPLICATED OR COMMERCIALLY EXPLOITED, IN WHOLE OR IN PART. THE DRAWINGS AND SPECIFICATIONS SHALL NOT BE USED BY THE OWNER ON OTHER PROJECTS, FOR ADDITIONS TO THIS PROJECT, OR FOR COMPLETION OF THIS PROJECT BY OTHERS. THE OWNER AGREES TO HOLD HARMLESS, INDEMNIFY AND DEFEND THE ARCHITECT AGAINST ALL DAMAGES, CLAIMS AND LOSSES, INCLUDING DEFENSE COSTS, ARISING OUT OF ANY REUSE OF THE PLANS AND SPECIFICATIONS WITHOUT THE WRITTEN AUTHORIZATION OF THE ARCHITECT OF RECORD.

COPYRIGHT © 2022 CO-AR DESIGN, INC., ALL RIGHTS RESERVED.

SEAL

REGISTERED PROFESSIONAL ENGINEER
DENNIS P. S. CHEUNG
No.9279
EXP.09/30/23
ELECTRICAL
STATE OF CALIFORNIA

NOTES

JHP Engineering and Design Services Inc.
3103 Independence Drive
Livermore, CA 94551
TEL: 925-409-2508
CEL: 510-468-0613
FAX: 510-788-6039

PROJECT
SALTALK FREMONT KITCHEN TENANT IMPROVEMENT

42550 ALBRAE ST.,
FREMONT, CA 94538

CLIENT

SALTALK, INC.
3334 VICTOR CT.,
SANTA CLARA, CA 95054

SUBMITTALS/ REVISIONS

4	1ST PLANNING SUBMITTAL	2/10/22
5	SCHEMATIC DESIGN	3/7/22
6	1ST HEALTH SUBMITTAL	4/7/22
7	1ST BLDG SUBMITTAL	4/11/22
8	2ND BLDG SUBMITTAL	7/29/22
9	2ND HEALTH SUBMITTAL 4	9/29/22

PROJECT NO	21127
SCALE:	AS SHOWN
DATE:	2/10/2022
DRAWN BY	TL / YC
CHECKED BY:	JP

SHEET TITLE
SINGLE-LINE DIAGRAM AND PANEL SCHEDULES

SHEET NO
E-0.4

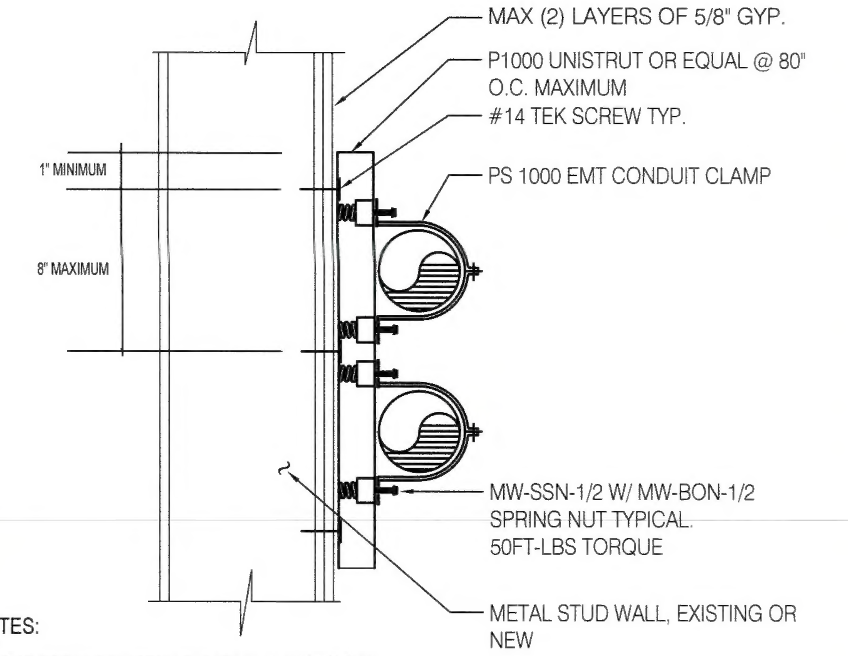

NOTES:

1. SUPPORT SPACING AT 80" O.C. MAXIMUM.
2. MAXIMUM TOTAL WEIGHT FOR CONDUITS LESS THAN 10 LBS/FT
3. ALL CONDUITS SUPPORTED SHALL BE LESS THAN 2 1/2" IN DIAMETER.
4. DO NOT ATTACH CONDUIT TO WALLS THAT ARE SUPPORTING LARGE EQUIPMENT ON EITHER SIDE OF WALL.

1 WALLMOUNTED CONDUIT

SCALE: N.T.S.

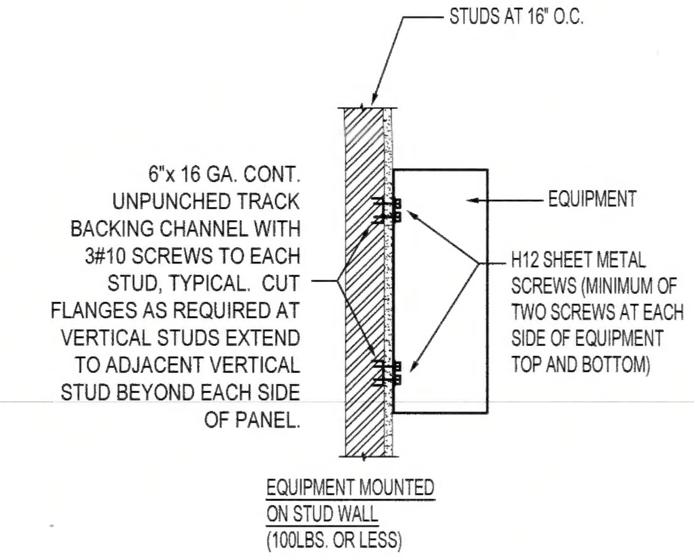

2 WALL EQUIPMENT MOUNTING DETAIL

SCALE: N.T.S.

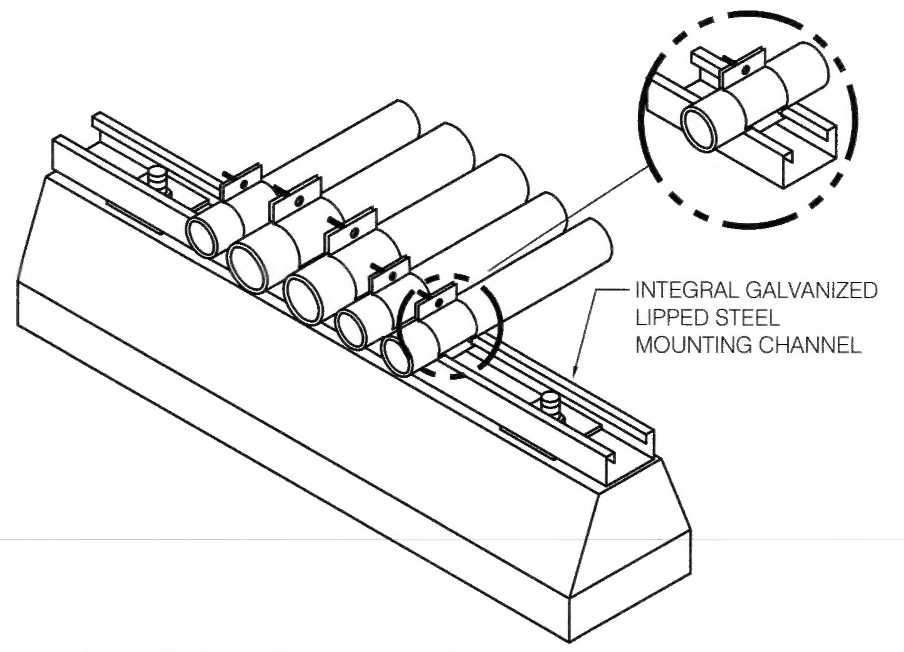

NOTES:

1. CONDUIT SHALL BE SUPPORT AT LEAST EVERY 80", IN ADDITION, CONDUIT SHALL BE SECURELY FASTENED WITHIN 3 FT. OF EACH OUTLET BOX, JUNCTION BOX, DEVICE BOX, CABINET, CONDUIT BODY OR OTHER CONDUIT TERMINATION.
2. THIS DETAIL SHALL BE USED FOR CONDUITS LESS THAN 2 1/2" IN DIAMETER AND MAXIMUM TOTAL WEIGHT OF 10 LBS/FT

3 ROOF CONDUIT SUPPORT DETAILS

SCALE: N.T.S.

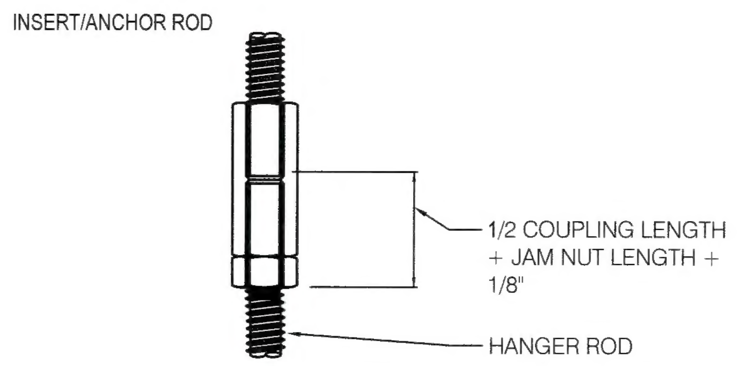

1). MEASURE THE LENGTH OF THE ROD COUPLING AND DIVIDE THE LENGTH BY TWO TO OBTAIN THE HALF LENGTH OF THE ROD COUPLING. ADD THE LENGTH OF THE JAM NUT AND 1/8" TO THE HALF LENGTH OF THE ROD COUPLING. MARK THE COMBINED LENGTH FROM THE END OF THE HANGER ROD WITH A PERMANENT MARKER TO ACHIEVE 50% DEPTH OF THE COUPLING WHEN THREADED ON TO THE ROD.
2). THREAD JAM NUT ONTO HANGER ROD UP TO THE MEASURED MARK ON THE HANGER ROD, LEAVING THE MARK EXPOSED. THREAD ROD COUPLING ONTO THE HANGER ROD UP TO THE JAM NUT. TIGHTEN ROD COUPLING UP AGAINST JAM NUT WITH CHANNEL-LOCK PLIERS, WRENCH, OR SIMILAR DEVICE.
3). THREAD THE HANGER ROD/JAM NUT/ROD COUPLING ASSEMBLY ON TO THE INSERT/ANCHOR ROD UNTIL THE HANGER ROD END CONTACTS THE INSERT/ANCHOR ROD END WITHIN THE COUPLING.
4). FINAL TIGHTENING IS ACHIEVED BY GRASPING THE INSERT ROD, JUST ABOVE THE COUPLING, AND GRASPING THE COUPLING, JAM NUT, OR HANGER ROD WITH CHANNEL-LOCK PLIERS, WRENCH, OR SIMILAR DEVICE AND TURNING UNTIL LOCKED. PROPER DEPTH IS VERIFIED BY CHECKING THE MARK ON THE THREADS OF THE HANGER ROD WHICH IS VISIBLE OUTSIDE THE ROD COUPLING.

4 INSTALLATION DETAILS OF ROD COUPLING

SCALE: N.T.S.

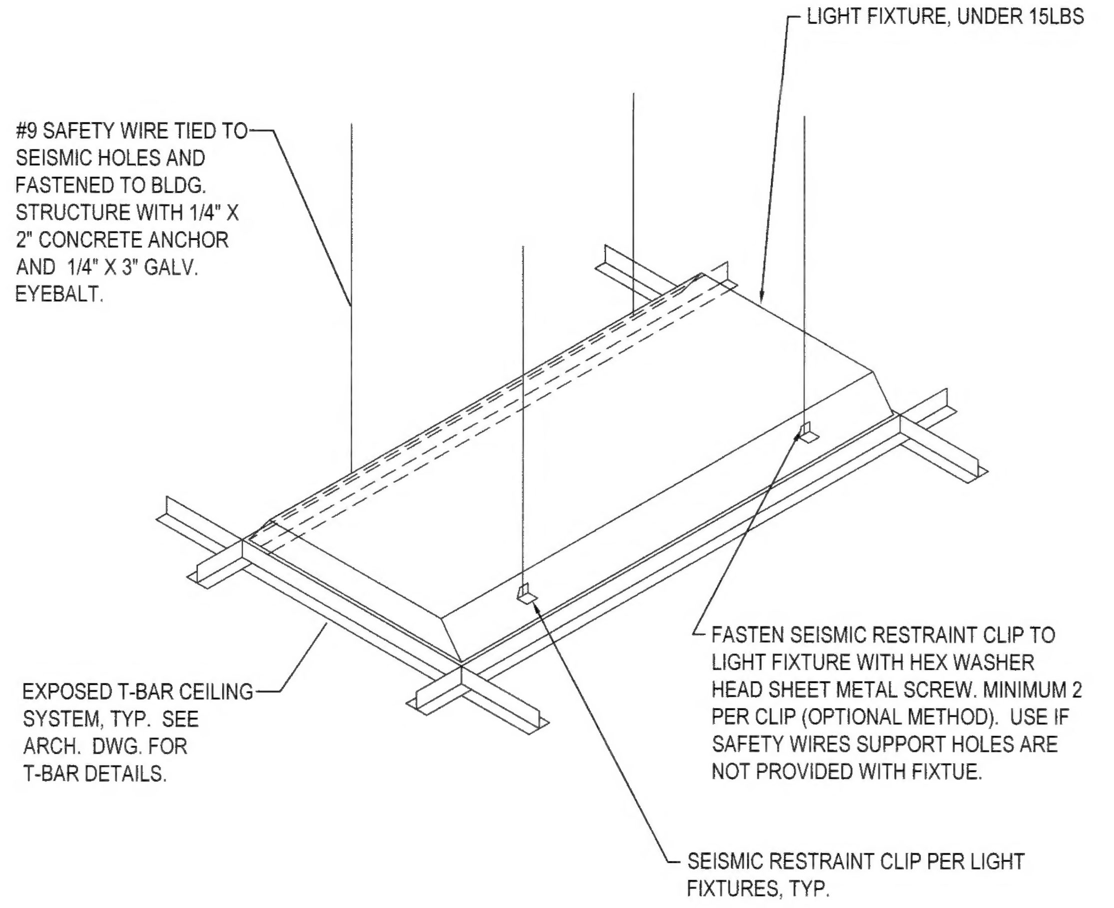

5 LIGHT FIXTURE SEISMIC RESTRAINT DETAIL

SCALE: N.T.S.

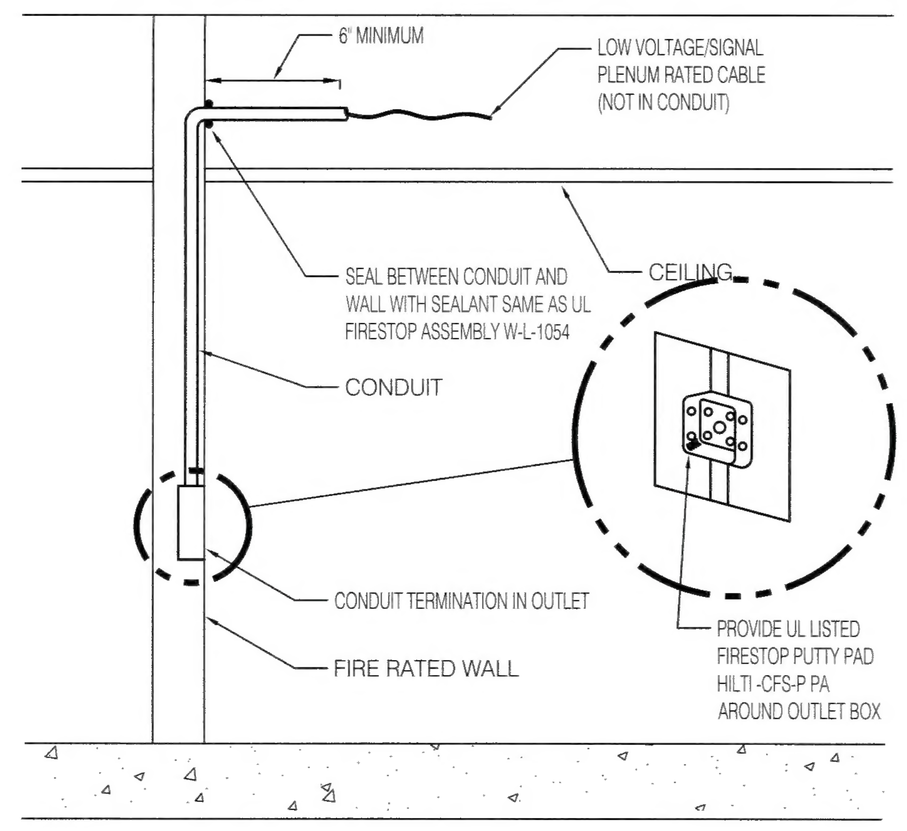

6 FIRE WALL CONDUIT PENETRATION DETAIL

SCALE: N.T.S.

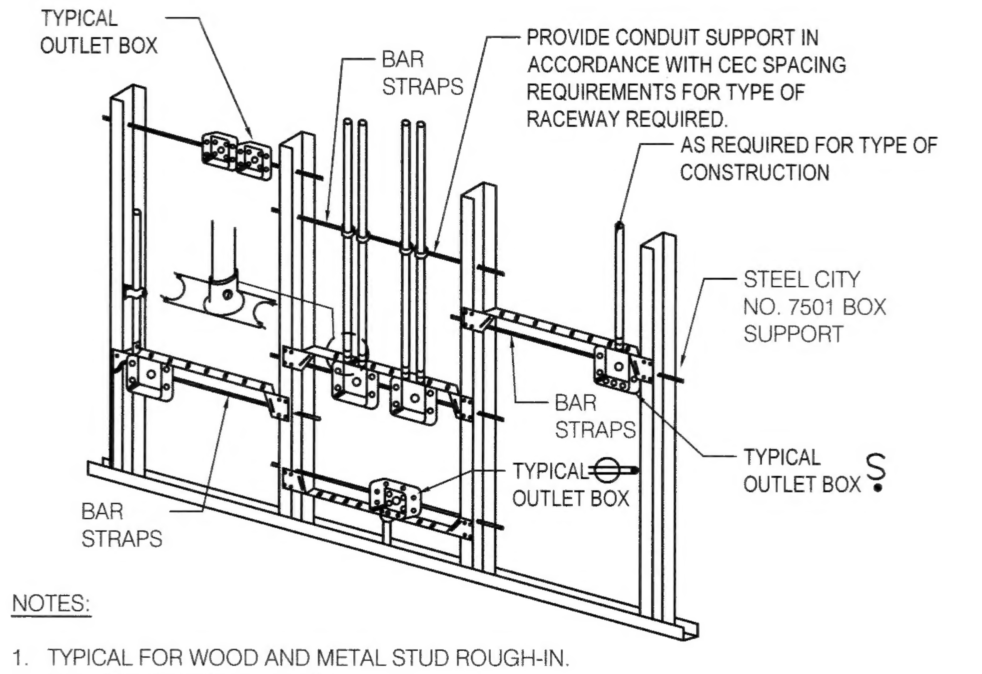

NOTES:

1. TYPICAL FOR WOOD AND METAL STUD ROUGH-IN.
2. PLASTER RINGS NOT SHOWN.
3. LOCATE ALL OUTLET BOXES IN ACCORDANCE WITH ARCHITECTURAL AND MECHANICAL DRAWINGS, AND WITH ALL APPLICABLE SHOP DRAWINGS.
4. IN ACCORDANCE WITH CBC SECTION 713, OUTLETS ON OPPOSITE SIDES OF FIRE RATED WALLS OR PARTITIONS IN THE SAME STUD SPACE MUST BE SEPARATED BY A MINIMUM OF 24" HORIZONTAL DISTANCE.

7 OUTLET ROUGH-IN DETAILS

SCALE: N.T.S.

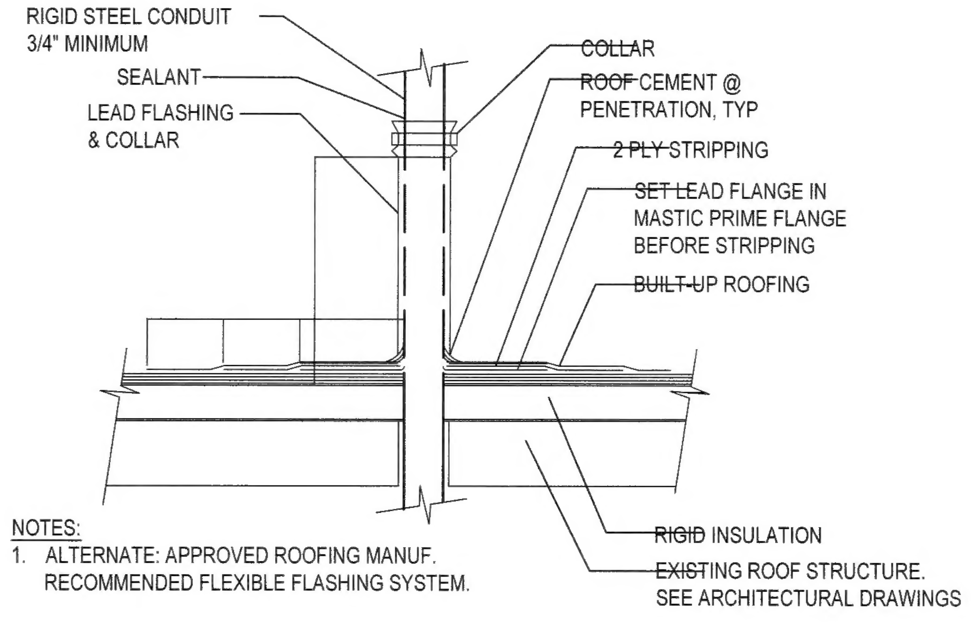

NOTES:

1. ALTERNATE: APPROVED ROOFING MANUF. RECOMMENDED FLEXIBLE FLASHING SYSTEM.

8 ROOF CONDUIT PENETRATION DETAILS

SCALE: N.T.S.

Alameda County
Dept. of Environmental Health
Approved By: T. Tran

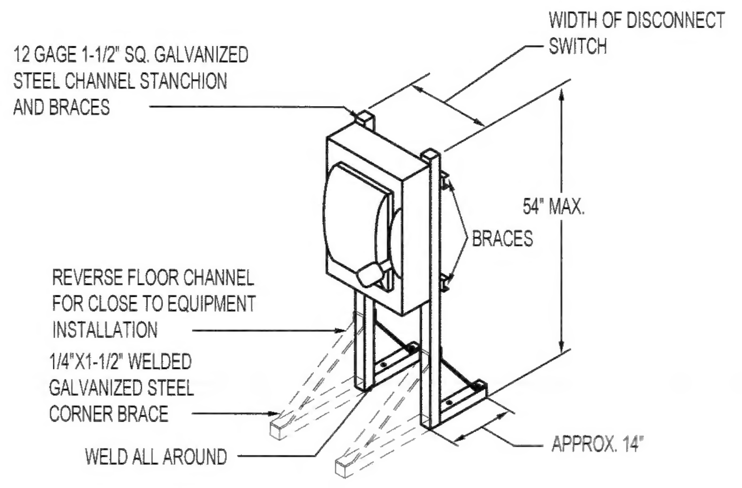

9 DISCONNECT/PANEL SUPPORT DETAIL

SCALE: N.T.S.

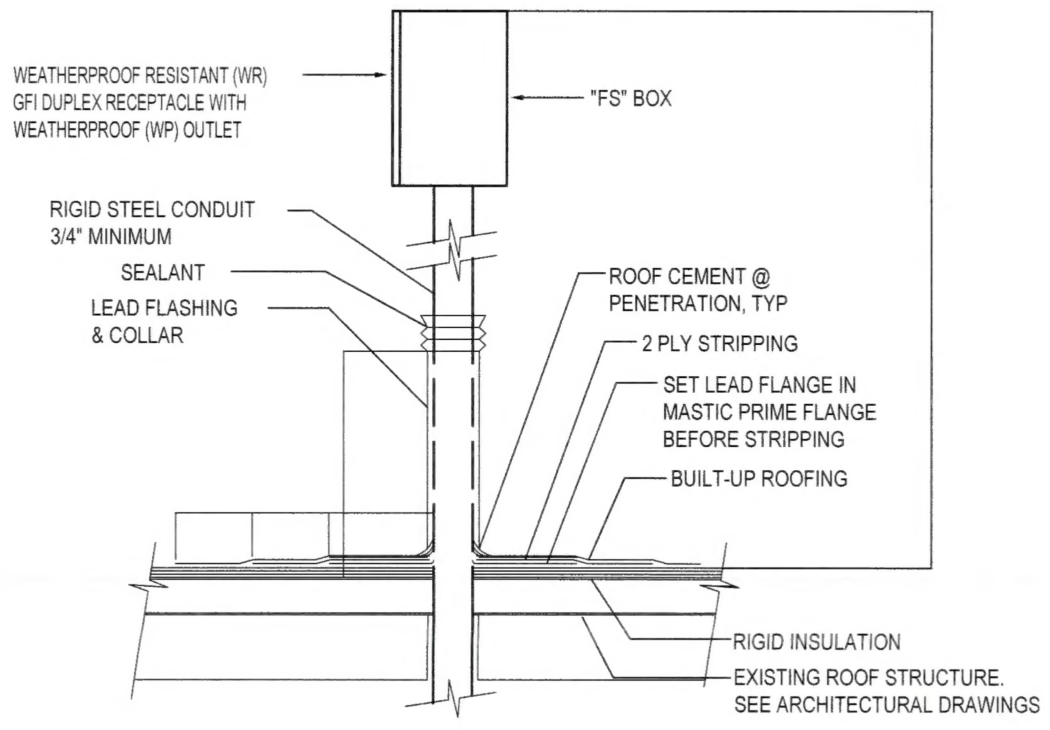

NOTES:

1. ALTERNATE: APPROVED ROOFING MANUF. RECOMMENDED FLEXIBLE FLASHING SYSTEM.

10 ROOF RECEPTACLE MOUNTING DETAIL

SCALE: N.T.S.

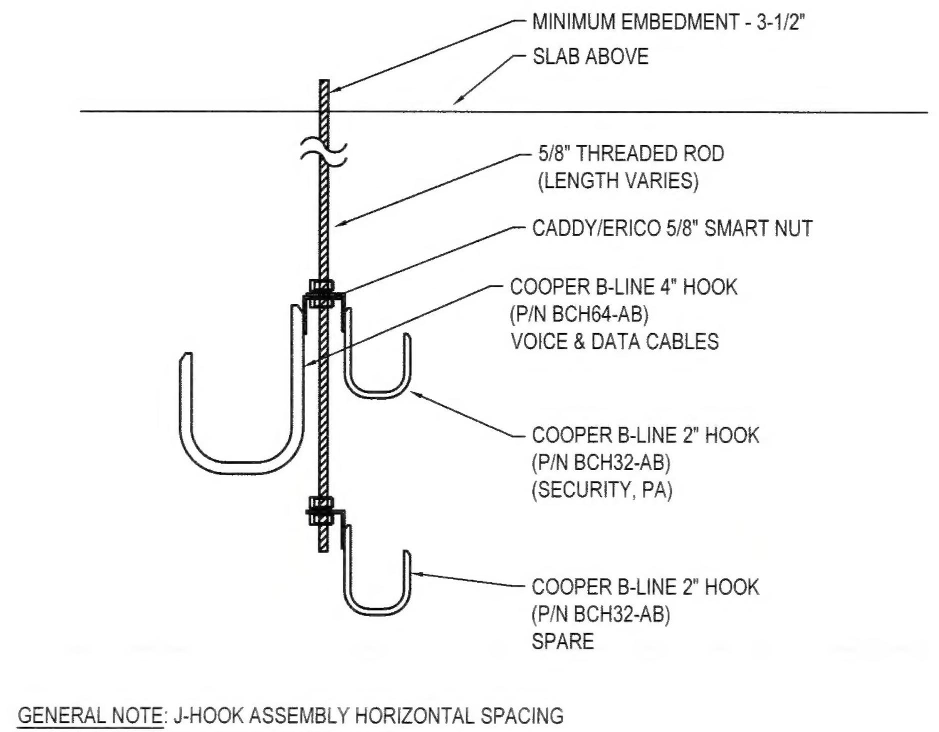

GENERAL NOTE: J-HOOK ASSEMBLY HORIZONTAL SPACING IS TO BE A MINIMUM 4' AND MAXIMUM OF 5'

DETAIL DESCRIPTION:

A. CEILING MOUNTED J-HOOK ASSEMBLE FOR USE AT LOCATIONS WHERE CABLING SHALL CROSS CORRIDORS AND WALL MOUNTED J-HOOKS ARE NOT AN OPTION.
B. PROVIDE WALL MOUNTED J-HOOK ASSEMBLY IN HALLWAY/CORRIDORS WHERE APPLICABLE.

11 J-HOOK SYSTEM MOUNTING DETAIL

SCALE: N.T.S.

CO AR

CO-AR DESIGN, INC.
680 Brea Canyon Rd., Ste. 178
Diamond Bar, CA 91789

Office: 909-598-0186
http:\\www.coardesign.com

Dennis J. Lee, Architect
dennisl@coardesign.com

THESE DRAWINGS ARE THE PROPERTY OF THE ARCHITECT. THE DESIGNS SHOWN AND DESCRIBED HERIN INCLUDING ALL TECHNICAL DRAWINGS ARE PROPRIETARY AND CANNOT BE COPIED, DUPLICATED OR COMMERCIALLY EXPLOITED, IN WHOLE OR IN PART. THE DRAWINGS AND SPECIFICATIONS SHALL NOT BE USED BY THE OWNER ON OTHER PROJECTS, FOR ADDITIONS TO THIS PROJECT, OR FOR COMPLETION OF THIS PROJECT BY OTHERS. THE OWNER AGREES TO HOLD HARMLESS, INDEMNIFY AND DEFEND THE ARCHITECT AGAINST ALL DAMAGES, CLAIMS AND LOSSES, INCLUDING DEFENSE COSTS, ARISING OUT OF ANY REUSE OF THE PLANS AND SPECIFICATIONS WITHOUT THE WRITTEN AUTHORIZATION OF THE ARCHITECT OF RECORD.

COPYRIGHT © 2022 CO-AR DESIGN, INC., ALL RIGHTS RESERVED.

SEAL:

REGISTERED PROFESSIONAL ENGINEER
DENNIS P.S. CHEUNG
No.9279
EXP.09/30/23
ELECTRICAL
STATE OF CALIFORNIA

NOTES:

JHP Engineering and Design Services Inc.
3103 Independence Drive
Livermore, CA 94551
TEL: 925-409-2508
CEL: 510-468-0613
FAX: 510-788-6039

PROJECT:

SALTALK FREMONT KITCHEN TENANT IMPROVEMENT

42550 ALBRAE ST.,
FREMONT, CA 94538

CLIENT:

SALTALK, INC.
3334 VICTOR CT.,
SANTA CLARA, CA 95054

SUBMITTALS/ REVISIONS:

4	1ST PLANNING SUBMITTAL	2/10/22
5	SCHEMATIC DESIGN	3/7/22
6	1ST HEALTH SUBMITTAL	4/7/22
7	1ST BLDG SUBMITTAL	4/11/22
8	2ND BLDG SUBMITTAL	7/29/22
9	2ND HEALTH SUBMITTAL	9/29/22

PROJECT NO:	21127
SCALE:	AS SHOWN
DATE:	2/10/2022
DRAWN BY:	TL / YC
CHECKED BY:	JP

SHEET TITLE:

ELECTRICAL INSTALLATION DETAILS

SHEET NO:

E-0.5

BIMcloud: COAR CONFERENCE - BIMcloud Basic for ARCHICAD 25/202201 Fremont Ghost Kitchen Thursday, February 10, 2022 1:47 PM

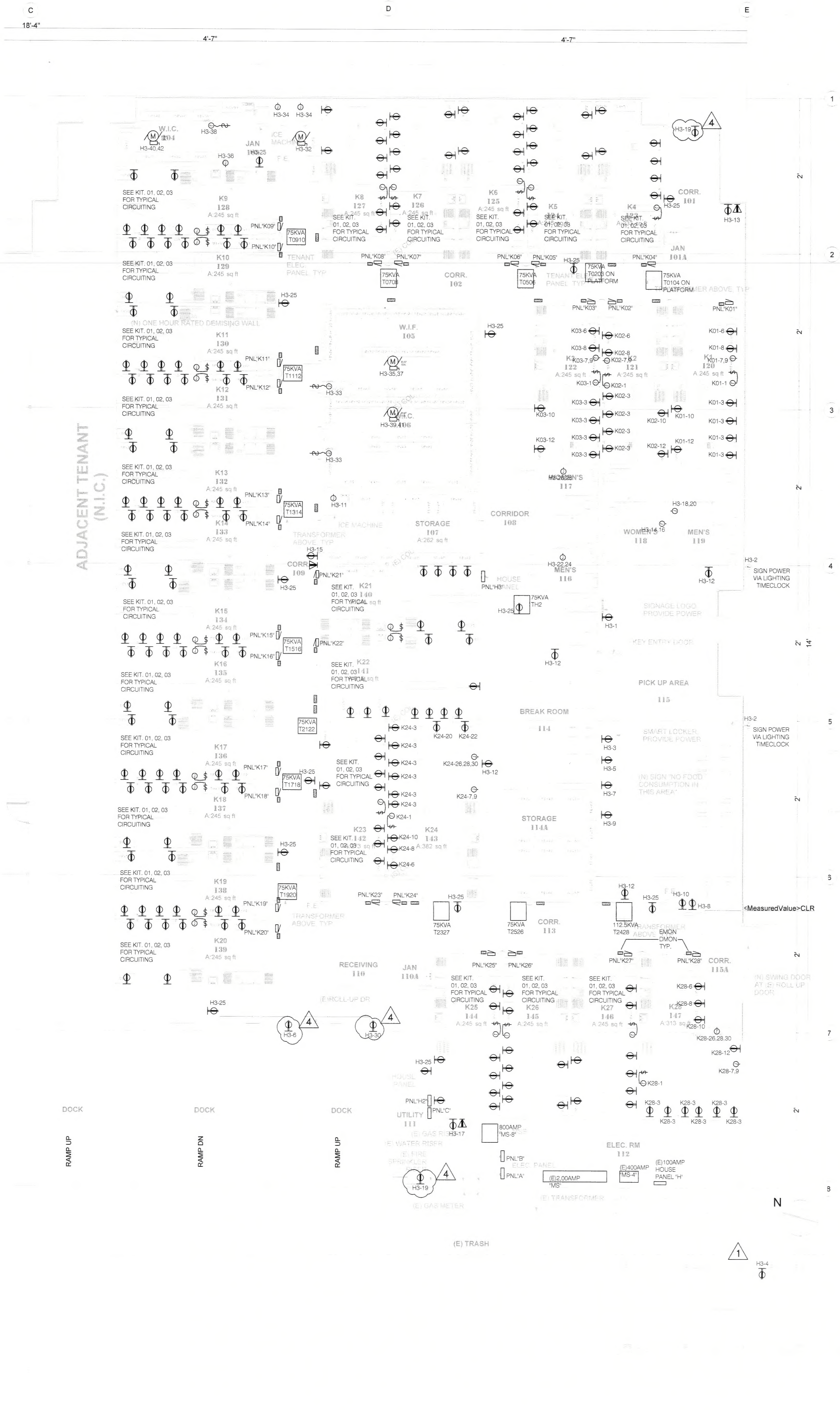

1 E-1.0 POWER PLAN - GROUND FLOOR
SCALE: 1/8" = 1'-0"

Alameda County
Dept. of Environmental Health
Approved By: T. Tran

GENERAL NOTES:

- CIRCUIT NUMBERS ARE SCHEMATIC AND SHOW THE DESIGN INTENTION AND LOAD BALANCE REQUIREMENTS. CONTRACTOR SHALL INDICATE ACTUAL CIRCUITS USED ON AS-BUILT DRAWINGS AND PANEL DIRECTORY.
- CONTRACTOR SHALL BE RESPONSIBLE FOR VERIFYING THE ELECTRICAL CHARACTERISTICS AND ADDITIONAL REQUIREMENTS FOR ALL THE ELECTRICAL FOOD SERVICE EQUIPMENT, INCLUDING OUTLET, PLUGS AND ANY EXTERNAL OR INTERNAL WIRING AND COMPLY AS REQUIRED. SEE ALL FOOD SERVICE DESIGN CONSULTANT'S DRAWINGS FOR EQUIPMENT SCHEDULE AND REQUIREMENTS.
- THE MOUNTING HEIGHT FOR ALL ELECTRICAL DEVICES SHALL BE VERIFIED WITH OWNER BY CONTRACTOR.
- CONTRACTOR SHALL VERIFY NEMA CONFIGURATION FOR ALL EQUIPMENT OUTLETS PRIOR TO INSTALLATION. FURNISH AND INSTALL RECEPTACLE AND/OR J-BOX TO MATCH EQUIPMENT CONNECTION.
- ALL 125V, SINGLE PHASE 15 AND 20 AMPERE RECEPTACLES INSTALLED WITHIN FOOD PREP. AND SERVICE AREA SHALL HAVE GROUND FAULT CIRCUIT INTERRUPTER PROTECTION FOR PERSONNEL.
- CONTRACTOR TO VERIFY THE LOCATION OF ALL MECHANICAL/PLUMBING EQUIPMENT FROM MECHANICAL/PLUMBING DRAWINGS PRIOR TO INSTALLING ELECTRICAL CONNECTION FOR MECHANICAL/PLUMBING EQUIPMENT.
- FURNISH AND INSTALL PHONE/DATA OUTLET AND 1/2" CONDUIT TO TELE/COM TERMINAL. WIRING AND TERMINATION BY OTHER.
- COORDINATE WITH FIRE ALARM DRAWINGS TO PROVIDE POWER TO FIREALARM EQUIPMENT AS NEEDED.
- CONTRACTOR TO VERIFY THE LOCATION OF ALL MECHANICAL/PLUMBING EQUIPMENT FROM MECHANICAL/PLUMBING DRAWINGS PRIOR TO INSTALLING ELECTRICAL CONNECTION FOR MECHANICAL/PLUMBING EQUIPMENT.

AREA OF WORK

2 KEY MAP
SCALE: 1/64" = 1'-0"

CO-AR DESIGN, INC.
680 Brea Canyon Rd., Ste. 178
Diamond Bar, CA 91789

Office: 909-598-0186
http:\\www.coardesign.com

Dennis J. Lee, Architect
dennisl@coardesign.com

THESE DRAWINGS ARE THE PROPERTY OF THE ARCHITECT. THE DESIGNS SHOWN AND DESCRIBED HERIN INCLUDING ALL TECHNICAL DRAWINGS ARE PROPRIETARY AND CANNOT BE COPIED, DUPLICATED OR COMMERCIALLY EXPLOITED, IN WHOLE OR IN PART. THE DRAWINGS AND SPECIFICATIONS SHALL NOT BE USED BY THE OWNER ON OTHER PROJECTS, FOR ADDITIONS TO THIS PROJECT, OR FOR COMPLETION OF THIS PROJECT BY OTHERS. THE OWNER AGREES TO HOLD HARMLESS, INDEMNIFY AND DEFEND THE ARCHITECT AGAINST ALL DAMAGES, CLAIMS AND LOSSES, INCLUDING DEFENSE COSTS, ARISING OUT OF ANY REUSE OF THE PLANS AND SPECIFICATIONS WITHOUT THE WRITTEN AUTHORIZATION OF THE ARCHITECT OF RECORD.

COPYRIGHT © 2022 CO-AR DESIGN, INC., ALL RIGHTS RESERVED.

SEAL:
REGISTERED PROFESSIONAL ENGINEER
DENNIS P. S. CHEUNG
No. 9279
EXP. 09/30/23
ELECTRICAL
STATE OF CALIFORNIA

NOTES:

JHP Engineering and Design Services Inc.
3103 Independence Drive
Livermore, CA 94551
TEL: 925-409-2508
CEL: 510-468-0613
FAX: 510-788-6039

PROJECT:
SALTALK FREMONT KITCHEN TENANT IMPROVEMENT

42550 ALBRAE ST.,
FREMONT, CA 94538

CLIENT:
SALTALK, INC.
3334 VICTOR CT.,
SANTA CLARA, CA 95054

SUBMITTALS/ REVISIONS:

4	1ST PLANNING SUBMITTAL	2/10/22
5	SCHEMATIC DESIGN	3/7/22
6	1ST HEALTH SUBMITTAL	4/7/22
7	1ST BLDG SUBMITTAL	4/11/22
8	2ND BLDG SUBMITTAL (1)	7/29/22
9	2ND HEALTH SUBMITTAL (4)	9/29/22

PROJECT NO:	21127
SCALE:	AS SHOWN
DATE:	2/10/2022
DRAWN BY:	TL / YC
CHECKED BY:	JP

SHEET TITLE:
POWER PLAN - GROUND FLOOR

SHEET NO:
E-1.0

BIMcloud: COAR-CONFERENCE - BIMcloud Basic for ARCHICAD 25/202201-Fremont-Ghost Kitchen Thursday, February 10, 2022 1:47 PM

GENERAL NOTES:

- CIRCUIT NUMBERS ARE SCHEMATIC AND SHOW THE DESIGN INTENTION AND LOAD BALANCE REQUIREMENTS. CONTRACTOR SHALL INDICATE ACTUAL CIRCUITS USED ON AS-BUILT DRAWINGS AND PANEL DIRECTORY.
- CONTRACTOR SHALL BE RESPONSIBLE FOR VERIFYING THE ELECTRICAL CHARACTERISTICS AND ADDITIONAL REQUIREMENTS FOR ALL THE ELECTRICAL FOOD SERVICE EQUIPMENT, INCLUDING OUTLET, PLUGS AND ANY EXTERNAL OR INTERNAL WIRING AND COMPLY AS REQUIRED. SEE ALL FOOD SERVICE DESIGN CONSULTANT'S DRAWINGS FOR EQUIPMENT SCHEDULE AND REQUIREMENTS.
- THE MOUNTING HEIGHT FOR ALL ELECTRICAL DEVICES SHALL BE VERIFIED WITH OWNER BY CONTRACTOR.
- CONTRACTOR SHALL VERIFY NEMA CONFIGURATION FOR ALL EQUIPMENT OUTLETS PRIOR TO INSTALLATION. FURNISH AND INSTALL RECEPTACLE AND/OR J-BOX TO MATCH EQUIPMENT CONNECTION.
- ALL 125V, SINGLE PHASE 15 AND 20 AMPERE RECEPTACLES INSTALLED WITHIN FOOD PREP. AND SERVICE AREA SHALL HAVE GROUND FAULT CIRCUIT INTERRUPTER PROTECTION FOR PERSONNEL.
- CONTRACTOR TO VERIFY THE LOCATION OF ALL MECHANICAL/PLUMBING EQUIPMENT FROM MECHANICAL/PLUMBING DRAWINGS PRIOR TO INSTALLING ELECTRICAL CONNECTION FOR MECHANICAL/PLUMBING EQUIPMENT.
- FURNISH AND INSTALL PHONE/DATA OUTLET AND 1/2" CONDUIT TO TELE/COM TERMINAL. WIRING AND TERMINATION BY OTHER.
- COORDINATE WITH FIRE ALARM DRAWINGS TO PROVIDE POWER TO FIREALARM EQUIPMENT AS NEEDED.
- CONTRACTOR TO VERIFY THE LOCATION OF ALL MECHANICAL/PLUMBING EQUIPMENT FROM MECHANICAL/PLUMBING DRAWINGS PRIOR TO INSTALLING ELECTRICAL CONNECTION FOR MECHANICAL/PLUMBING EQUIPMENT.

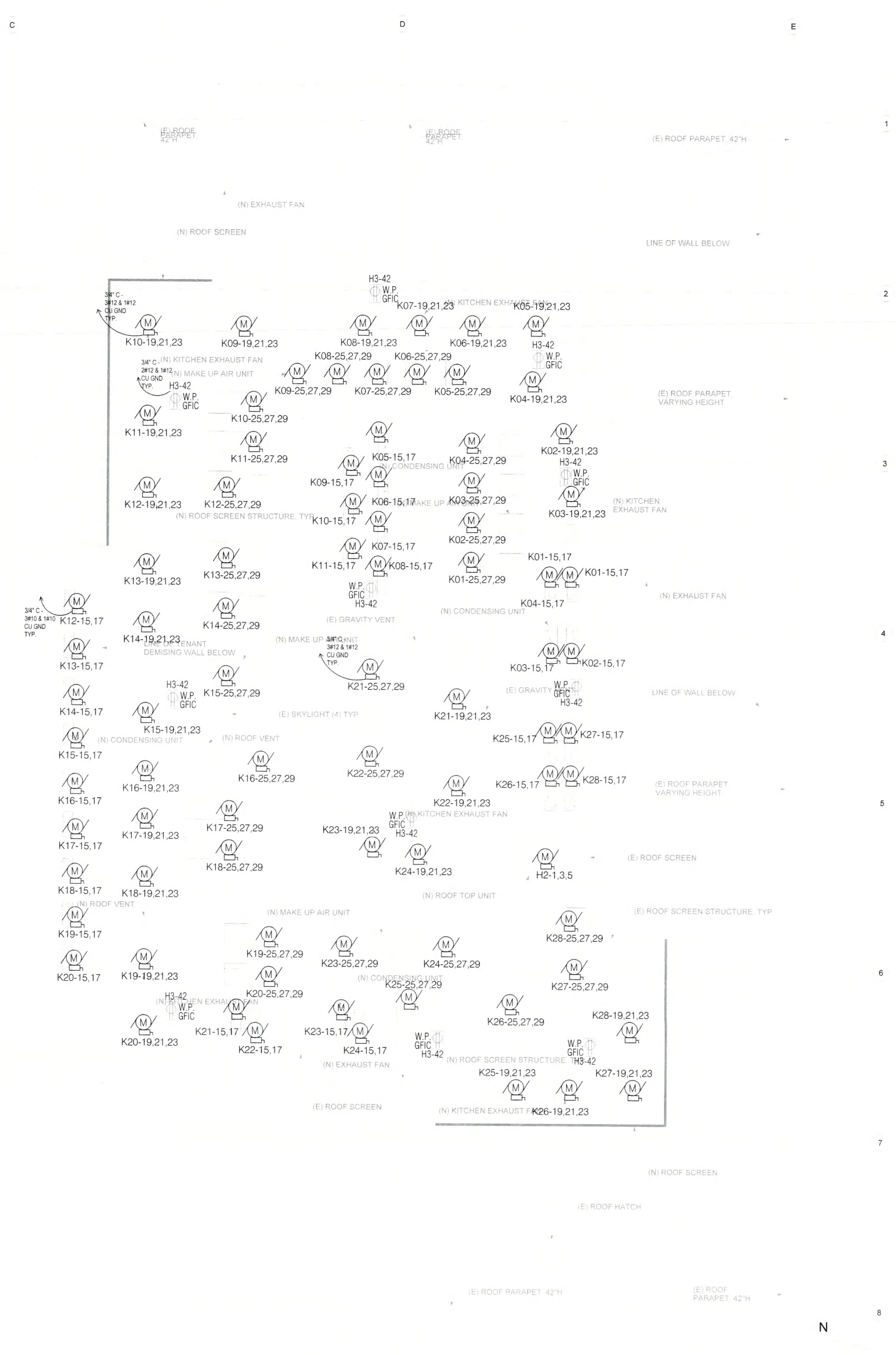

Alameda County
Dept. of Environmental Health
Approved By: T. Tran

1
E-1.1

POWER PLAN - ROOF

SCALE: 1/8" = 1'-0"

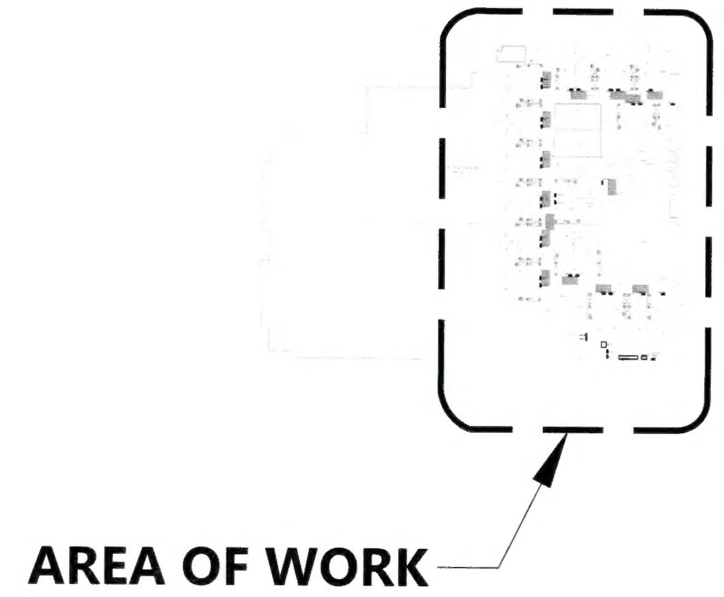

2

KEY MAP

SCALE: 1/64" = 1'-0"

CO-AR DESIGN, INC.
680 Brea Canyon Rd., Ste. 178
Diamond Bar, CA 91789

Office: 909-598-0186
http:\\www.coardesign.com

Dennis J. Lee, Architect
dennisl@coardesign.com

THESE DRAWINGS ARE THE PROPERTY OF THE ARCHITECT. THE DESIGNS SHOWN AND DESCRIBED HERIN INCLUDING ALL TECHNICAL DRAWINGS ARE PROPRIETARY AND CANNOT BE COPIED, DUPLICATED OR COMMERCIALLY EXPLOITED, IN WHOLE OR IN PART. THE DRAWINGS AND SPECIFICATIONS SHALL NOT BE USED BY THE OWNER ON OTHER PROJECTS, FOR ADDITIONS TO THIS PROJECT, OR FOR COMPLETION OF THIS PROJECT BY OTHERS. THE OWNER AGREES TO HOLD HARMLESS, INDEMNIFY AND DEFEND THE ARCHITECT AGAINST ALL DAMAGES, CLAIMS AND LOSSES, INCLUDING DEFENSE COSTS, ARISING OUT OF ANY REUSE OF THE PLANS AND SPECIFICATIONS WITHOUT THE WRITTEN AUTHORIZATION OF THE ARCHITECT OF RECORD.

COPYRIGHT © 2022 CO-AR DESIGN, INC., ALL RIGHTS RESERVED.

SEAL:

REGISTERED PROFESSIONAL ENGINEER
DENNIS P. S. CHEUNG
No. 9279
EXP. 09/30/23
ELECTRICAL
STATE OF CALIFORNIA

NOTES:

JHP Engineering and Design Services Inc.
3103 Independence Drive
Livermore, CA 94551
TEL: 925-409-2508
CEL: 510-468-0613
FAX: 510-788-6039

PROJECT:

SALTALK FREMONT KITCHEN TENANT IMPROVEMENT

42550 ALBRAE ST.,
FREMONT, CA 94538

CLIENT:

SALTALK, INC.
3334 VICTOR CT.,
SANTA CLARA, CA 95054

SUBMITTALS/ REVISIONS:

4	1ST PLANNING SUBMITTAL	2/10/22
5	SCHEMATIC DESIGN	3/7/22
6	1ST HEALTH SUBMITTAL	4/7/22
7	1ST BLDG SUBMITTAL	4/11/22
8	2ND BLDG SUBMITTAL	7/29/22
9	2ND HEALTH SUBMITTAL	9/29/22

PROJECT NO:	21127
SCALE:	AS SHOWN
DATE:	2/10/2022
DRAWN BY:	TL / YC
CHECKED BY:	JP

SHEET TITLE:

POWER PLAN - ROOF

SHEET NO:

E-1.1

BIMcloud: COAR-CONFERENCE - BIMcloud Basic for ARCHICAD 25/202201-Fremont Ghost Kitchen Thursday, February 10, 2022 1:47 PM

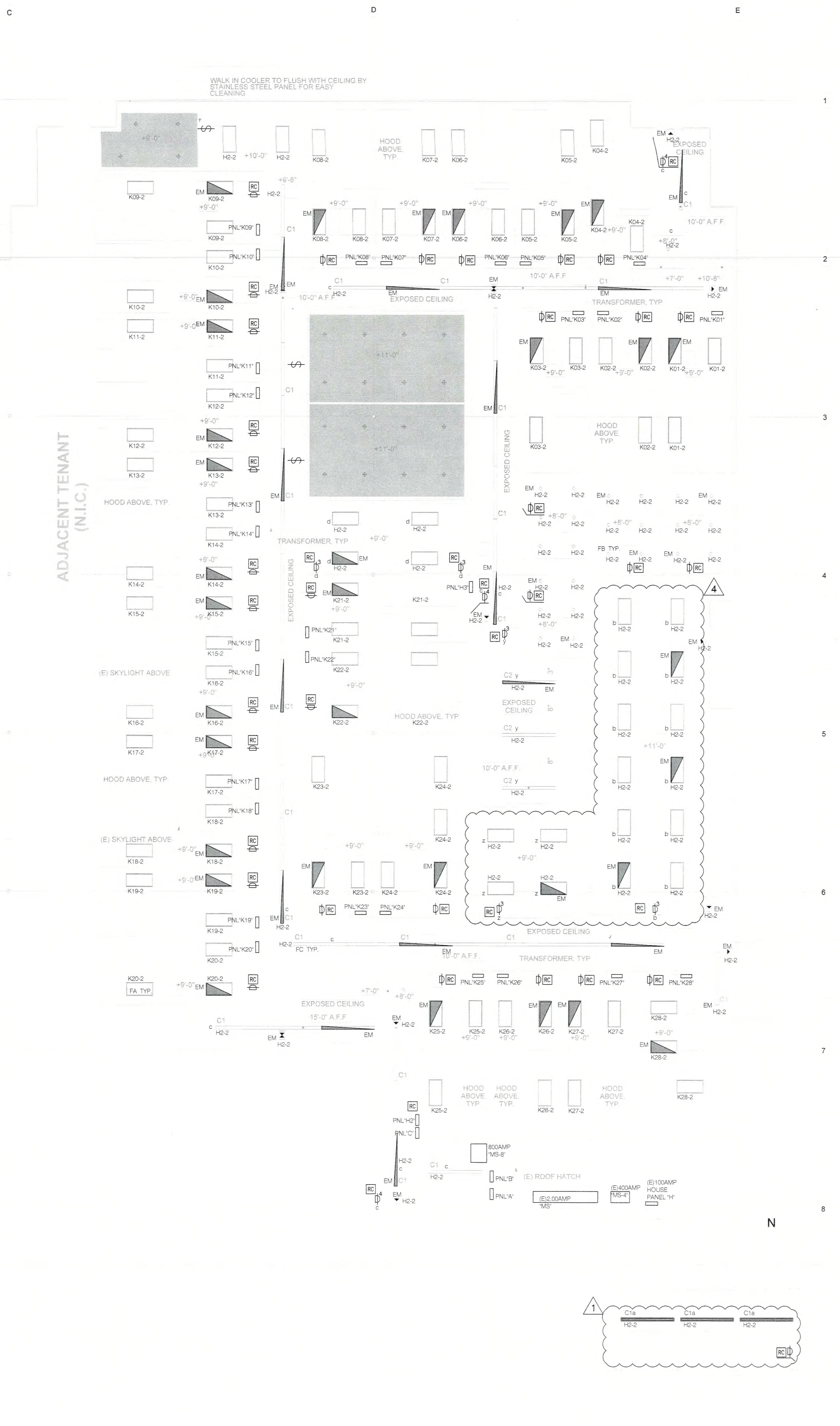

Alameda County
Dept. of Environmental Health
Approved By: T. Tran

1 LIGHTING PLAN - GROUND FLOOR
SCALE: 1/8" = 1'-0"

GENERAL NOTES:

- CIRCUIT NUMBERS ARE SCHEMATIC AND SHOW THE DESIGN INTENTION AND LOAD BALANCE REQUIREMENTS. CONTRACTOR SHALL INCLUDE IN HIS BID THE TIME REQUIRED TO FIELD VERIFY AND TRACE ALL EXISTING AVAILABLE CIRCUITS AND THOSE, WHICH BECOME AVAILABLE AS A RESULT OF DEMOLITION. CONTRACTOR SHALL INDICATE ACTUAL CIRCUITS USED ON AS-BUILD DRAWINGS AND PANEL DIRECTORY.
- FEED ALL CIRCUITS FROM NEW PANEL " H2 " THE GROUND FLOOR U.O.N.
- FURNISH AND INSTALL NEW DIMMABLE FIXTURE TO NEW LOCATION AND CONNECT TO CIRCUIT AND CONTROL AS INDICATED.
- ALL LIGHTING CIRCUITS SHALL BE ROUTED THROUGH TIME CLOCK/LIGHTING CONTRACTOR PANEL EXCEPT THOSE DESIGNED AS EMERGENCY.
- ALL EMERGENCY LIGHTS AND EXIT LIGHTS SHALL BE EQUIP WITH EM BATTERY OPTION TO ILLUMINATE FOR AT LEAST 90 MINUTES.
- FURNISH AND INSTALL NEW TIME CLOCK BYPASS SWITCH. ALL LIGHT FIXTURES EXCEPT THOSE DESIGNATED AS EMERGENCY SHALL BE CONNECTED TIME CLOCK, WITH AFTER HOUR BYPASS CAPABILITY.
- FURNISH AND INSTALL NEW WALL MOUNTED DIMMER SWITCH, AND CONNECT TO LIGHTS IN THE AREA.
- LIGHTING FIXTURE LOCATED OVER ANY UNCOVERED FOOD OR UTENSILS SHALL BE SHATTERPROOF AND CLEANABLE.
- SUFFICIENT NATURAL OR ARTIFICIAL LIGHTING SHALL BE AT AND FOR THE FOLLOWING TASK; MINIMUM 20FC MEASURED 30 INCHES ABOVE THE FLOOR FOR GENERAL CLEAN-UP AND 50FC AT SURFACES WHERE FOOD EMPLOYEES WILL WORK WITH FOOD OR WITH UTENSILS OR EQUIPMENT USED FOR CUTTING OR GRINDING.
- ALL LIGHTS SHALL BE ROUTED THROUGH ASTRONOMICAL TIME CLOCK. COORDINATE WITH OWNER FOR ON/OFF SCHEDULE.
- LIGHTING CONTROL SYSTEM SHALL BE ACUITY BRANDS; NLIGHT SYSTEM, LUTRON/WATTSTOPPER OR APPROVED EQUAL. COORDINATE WITH LIGHTING SUPPLIER FOR EXACT QUANTITY AND LOCATION OF DEVICES.

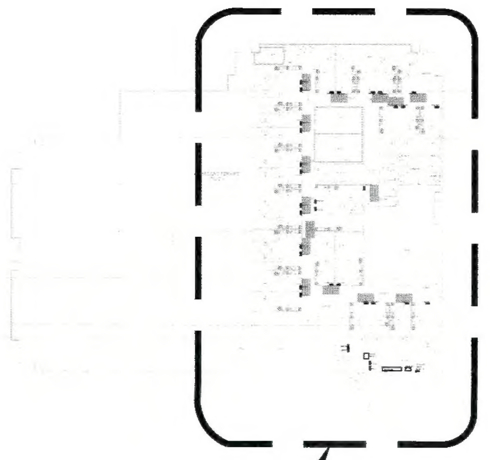

AREA OF WORK

2 KEY MAP
SCALE: 1/64" = 1'-0"

CO-AR DESIGN, INC.
680 Brea Canyon Rd., Ste. 178
Diamond Bar, CA 91789

Office: 909-598-0186
http:\\www.coardesign.com

Dennis J. Lee, Architect
dennisl@coardesign.com

THESE DRAWINGS ARE THE PROPERTY OF THE ARCHITECT. THE DESIGNS SHOWN AND DESCRIBED HERIN INCLUDING ALL TECHNICAL DRAWINGS ARE PROPRIETARY AND CANNOT BE COPIED, DUPLICATED OR COMMERCIALLY EXPLOITED, IN WHOLE OR IN PART. THE DRAWINGS AND SPECIFICATIONS SHALL NOT BE USED BY THE OWNER ON OTHER PROJECTS, FOR ADDITIONS TO THIS PROJECT, OR FOR COMPLETION OF THIS PROJECT BY OTHERS. THE OWNER AGREES TO HOLD HARMLESS, INDEMNIFY AND DEFEND THE ARCHITECT AGAINST ALL DAMAGES, CLAIMS AND LOSSES, INCLUDING DEFENSE COSTS, ARISING OUT OF ANY REUSE OF THE PLANS AND SPECIFICATIONS WITHOUT THE WRITTEN AUTHORIZATION OF THE ARCHITECT OF RECORD.

COPYRIGHT © 2022 CO-AR DESIGN, INC., ALL RIGHTS RESERVED.

SEAL:
REGISTERED PROFESSIONAL ENGINEER
DENNIS P. S. CHEUNG
No.9279
EXP.09/30/23
ELECTRICAL
STATE OF CALIFORNIA

NOTES:

JHP Engineering and Design Services Inc.
3103 Independence Drive
Livermore, CA 94551
TEL: 925-409-2508
CEL: 510-468-0613
FAX: 510-788-6039

PROJECT:
SALTALK FREMONT KITCHEN TENANT IMPROVEMENT

42550 ALBRAE ST.,
FREMONT, CA 94538

CLIENT:

SALTALK, INC.
3334 VICTOR CT.,
SANTA CLARA, CA 95054

SUBMITTALS/ REVISIONS:

4	1ST PLANNING SUBMITTAL	2/10/22
5	SCHEMATIC DESIGN	3/7/22
6	1ST HEALTH SUBMITTAL	4/7/22
7	1ST BLDG SUBMITTAL	4/11/22
8	2ND BLDG SUBMITTAL △1	7/29/22
9	2ND HEALTH SUBMITTAL △4	9/29/22

PROJECT NO:	21127
SCALE:	AS SHOWN
DATE:	2/10/2022
DRAWN BY:	TL / YC
CHECKED BY:	JP

SHEET TITLE:
LIGHTING PLAN - GROUND FLOOR

SHEET NO:
E-2.0